COLAS
GEARCASE
PIEDI

COLAS COMPLETAS
COMPLETE GEARCASE ASSEMBLY
PIEDI COMPLETI

Ref.	R.O.	Cola completa Complete gearcase Piedi completi	Reducción Gear ratio Riduzione
REC1647-9148T84	1647-9148T84	20"	1.87:1
REC1647-9148T85	1647-9148T85	25"	1.87:1
REC1647-9148T81	1647-9148T81	20"	2:1
REC1647-9148T82	1647-9148T82	25"	2:1

MOTORES / ENGINES / MOTORI

2.0 / 2.4 / 2.5 L V6
V115 - V-200 (DFI)
XR-6
110, 140 JET (2.5L)

Ref.	R.O.	Cola completa Complete gearcase Piedi completi	Reducción Gear ratio Riduzione	Estrías eje Splines shaft Scalanature
REC1623-859399T13	1623-859399T13	20"	1.75:1	
REC1623-859399T14	1623-859399T14	25"	1.75:1	
REC1623-822442A19	1623-822442A19	20"	1.64:1	8
REC1623-822442A20	1623-822442A20	25"	1.64:1	8

MOTORES / ENGINES / MOTORI

3.0L
200 - 250 HP
3.0 (EFI, DFI)

Ref.	R.O.	Cola completa Complete gearcase Piedi completi	Reducción Gear ratio Riduzione
REC1667-9011R6	1667-901167, 78		2.07:1
	1667-901110, 11		
	1667-9011G51		
	1667-9011J6		
	1667-9011R6		

MOTORES / ENGINES / MOTORI

100 - 125 HP (4 cyl)
80 Jet

Selector 6 dientes / 6 Jaw Tooth
/ Selettore 6 denti

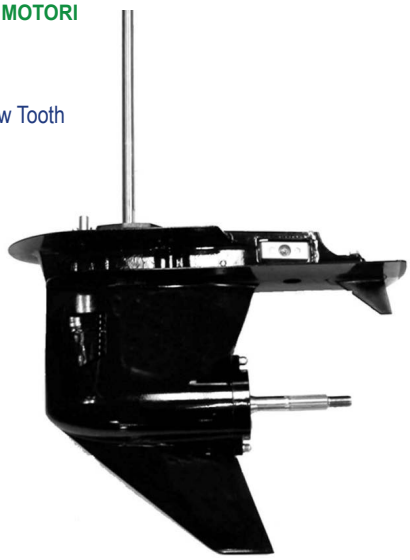

Ref.	R.O.	Cola completa Complete gearcase Piedi completi	Ø Torpedo	Reducción Gear ratio Riduzione
REC1667-9011G90	1667-9011G90	20"	4.25"/107.95 mm	2.31:1
	1667-9011G70			

MOTORES / ENGINES / MOTORI

40 HP (4 cyl) OP094500 - OP206999
40 EFI (4 cyl) OP153500 - OP515896
50 HP (4 cyl) OP094500 - OP206999
50 EFI (4 cyl) OP153500 - OP515896
60 HP (4 cyl) OP094500 - OP206999
60 EFI (4 cyl) OP153500 - OP515896

(4 Tiempos / 4 Strokes / 4 Tempi)

Ref.	R.O.	Cola completa Complete gearcase Piedi completi	Ø Torpedo	Reducción Gear ratio Riduzione
REC1667-9011J41	1667-9011J41	25"	4.25"/107.95 mm	2.33:1

MOTORES / ENGINES / MOTORI

40 EFI (4 cyl) OP216185+
50 EFI (4 cyl) OP216185+
60 EFI (4 cyl) OP216185+

(4 Tiempos / 4 Strokes / 4 Tempi)

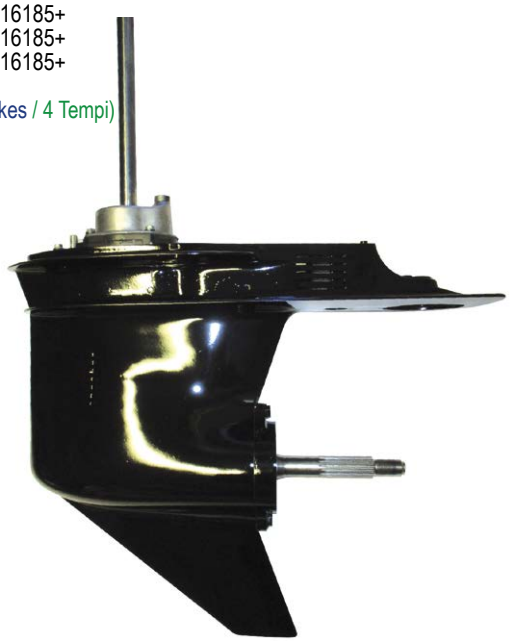

HERRAMIENTAS
TOOLS
ATTREZZI

EXTRACTOR COJINETES Y HÉLICES
PROP AND BEARING PULLER
ESTRATTORE CUSCINETTI E ELICHE

Ref.
REC90095

Extractor de cojinetes y hélices, con patas. Para todos los cojinetes Mercruiser y la mayoría de las hélices.
Prop and bearing carrier puller. Capacity: 5 Tons (Min). For Mercruiser All Style Bearing Carrier and Most Props.
Estrattore cuscinetti e eliche. Per tutti i cuscinetti Mercruiser e la maggior parte delle eliche.

Para hélices y cojinetes antiguos
For prop and old style bearing carrier.
Per eliche e cuscinetti vecchi.

Para cojinetes modernos
For new style bearing carrier.
Per cuscinetti moderni.

EXTRACTOR PIÑONES Y COJINETES
UNIVERSAL PULLER PLATE
ESTRATTORE PIGNONE E CUSCINETTI

Ref.	Capacidad Capacity Capacità
REC91-00001	30-50 mm / 1 1/4" ~ 2 1/4"
REC91-00002	50-75 mm / 2 1/4" ~ 3 1/2"
REC91-37241	75-105 mm / 3" ~ 4 1/2"

RECmar®

EXTRACTOR COJINETES
DRIVER BEARING
ESTRATTORE CUSCINETTI

Ref.	R.O.
REC91-34569A1	91-34569A1

NEW

Ref.	R.O.
REC91-36569T	91-36569T

Para desmontar el cojinete de las colas MC-I, R-MR, Alpha One.
Removes pinion bearing from MC-I, R-MR, and Alpha One drive units.
Per rimuovere il cuscinetto dal piede MC-I, R-MR, Alpha One.

KIT HERRAMIENTAS COLAS
GEAR CASE TOOL KIT
KIT ATTREZZI PIEDI

Ref.	R.O. / OEM
RM91-31229A7	91-31229A7

Kit de montaje y desmontaje de los retenes y cojinetes de las colas Alpha, Alpha Gene II y Bravo.
Removes and installs bearings in MC-I, R-MR, Alpha One, Alpha One Gen Two and Bravo.
Kit di montaggio e smontaggio delle guarnizioni di tenuta e dei cuscinetti del piede.

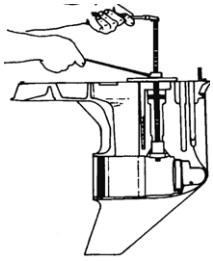

KIT LLAVE HÉLICE
PROP WRENCH KIT
KIT CHIAVE ELICHA

Ref.	RO OEM	TUERCA NUT DADO
REC91-859046Q4	SIERRA 18-4446	1 1/16"
	MERCURY 91-821887T1	
	MCM 91-859046Q4	
	HONDA 89-89206-ZW7-000AH	

Mercury Mariner 75 - 300 HP
Force V4, V6
Mercruiser Alpha / Bravo
Honda BF75-BF130
Suzuki DF60 - DF225 HP
Nissan / Tohatsu 70-140 HP
Yamaha Sterndrives
Yamaha 50-250 HP
OMC Cobra / Volvo SX
Jonhson Evinrude V4 / V6 / V8

EXTRACTOR
PULLER ROD
ESTRATTORE

Ref.	R.O.
REC91-31229	91-31229

Para utilizar con las herramientas REC91-43579 y REC91-36569T para instalar y desmontar el cojinete
Used with REC91-43579 & REC91-36569T tools to install & remove pinion bearing.
Da utilizzare con gli strumenti REC91-43579 e REC91-36569T per installare e smontare il cuscinetto.

LLAVE TUERCA EJE VERTICAL
PINION NUT ADAPTOR KIT
CHIAVE DADO ASSE VERTICALE

Ref.	R.O. / OEM
REC91-43506T	91-43506T

Para montaje y desmontaje del retenedor y cojinete superior en colas.
Removes and installs threaded bearing retainer on stern drives.
Per il montaggio e lo smontaggio del fermo di ritegno e del cuscinetto superiore dei piedi.

Ref.	R.O. / OEM
REC91-61067A04	91-61067A04

Incluye un adaptador eje. Sostiene la tuerca del piñón cuando se está sacando el piñón y el eje en las colas MC-I, R-MR, Alpha One.
Holds pinion nut when removing pinion gear and drive shaft on MC-I, R-MR, and Alpha One drive units. Comes with drive shaft adaptor.
Include un adattatore albero. Tenendo il dado del pignone quando si rimuove la ruota dentata e l'albero nel piede.

LLAVE ESTRIADO EJE
PROP SHAFT ADAPTOR
CHIAVE ASSE STRIATO

Ref.	R.O. / OEM
REC91-61077T	91-61077T

Da una superficie de llave para girar el eje de la hélice en las colas MC-I, R-MR, TRS, Alpha One y Gene II y Bravo I.
Provides a wrench surface to turn the propeller shaft on MC-I; R-MR; Alpha One; Alpha One, Gen Two; Bravo One; and TRS drive units.
Fornisce una superficie di chiave per ruotare l'asse del propulsore nel piede MCI, R-MR, TRS, Alpha One e Gen II, e Bravo I.

Ref.	R.O. / OEM
REC91-56775T	91-56775T

Da una superficie de llave para girar el eje de la hélice en las colas MC-I, R-MR, TRS, Alpha One y Gene II.
Provides a wrench surface to turn the propeller shaft on MC-I; R-MR; Alpha One; Alpha One, Gen Two; and TRS drive units.
Fornisce una superficie di chiave per ruotare l'asse del propulsore nel piede MCI, R-MR, TRS, Alpha One e Gen II.

LLAVE TUERCA VARILLA CAMBIO
SHIFT SHAFT BUSHING TOOL
CHIAVE DADO LEVA CAMBIO

Ref.	R.O. / OEM
REC91-31107T	91-31107T

Para montaje y desmontaje de las tuercas de la varilla cambio en las colas MC-I, R-MR, Alpha One.
Removes and installs the shift shaft bushing in the gear case of MC-I, R-MR, and Alpha One, drive units.
Per il montaggio e lo smontaggio dei dadi sull'asta cambiare nel piede MC-1, R-MR, Alpha One.

LLAVE CABLE CAMBIO
SHIFT CABLE TOOL
CHIAVE PER CAVO CAMBIO

Ref.	R.O. / OEM
REC91-12037	91-12037

Para montaje y desmontaje de los cables de cambio en las colas MC-I,R-MR, Alpha One, Gene II.
Installs and removes drive shaft bearing retainer on MC-1, R-MR, Blackhawk, all Bravo, and all Alpha drive units.
Per il montaggio e lo smontaggio dei cavi di innesto nel piede MC-I, R-MR, Alpha One, Gen II.

LLAVE TUERCA DIABOLO
BEARING CARRIER RETAINER WRENCH
CHIAVE PER CUSCINETTO

Ref.	R.O. / OEM
REC91-61069T	91-61069T

Instala y desinstala las tuercas del diabolo en las colas MC-I, R-MR, TRS, Alpha One y Gene II y Bravo I y II
Removes and installs bearing carrier retainer nuts on Bravo One and Two; MC-I; R-MR; and Alpha One, Gen. Two; and TRS; drive units.
Installa e Disinstalla i dadi di fissaggio dell'asse nel piede MC-I, R-MR, TRS, Alpha One, Gen II, Bravo I, III.

LLAVE GALGADO PIÑONES
PINION GEAR SHIMMING TOOL
CHIAVE PER PIGNONI

Ref.	R.O. / OEM
REC91-56048001	91-56048001
REC91-60523	91-60523
REC91-60526T	91-60526T

REC91-56048001

Mide la altura del piñón en las colas MC-I, R-MR, Alpha One y Gene II
Measures pinion height of MC-I; R-MR; Alpha One; and Alpha One, Gen Two drive units.
Misurare l'altezza del pignone nel piede MC-I, R-MR, Alpha One e Gen II.

REC91-60526T

REC91-60523

RECAMBIOS MARINOS S.L.

DESPIECE COLA
GEARCASE COMPONENTS
ESPLOSO PIEDE

4 TIEMPOS STROKES | 2 TIEMPOS STROKES

4 / 5 HP

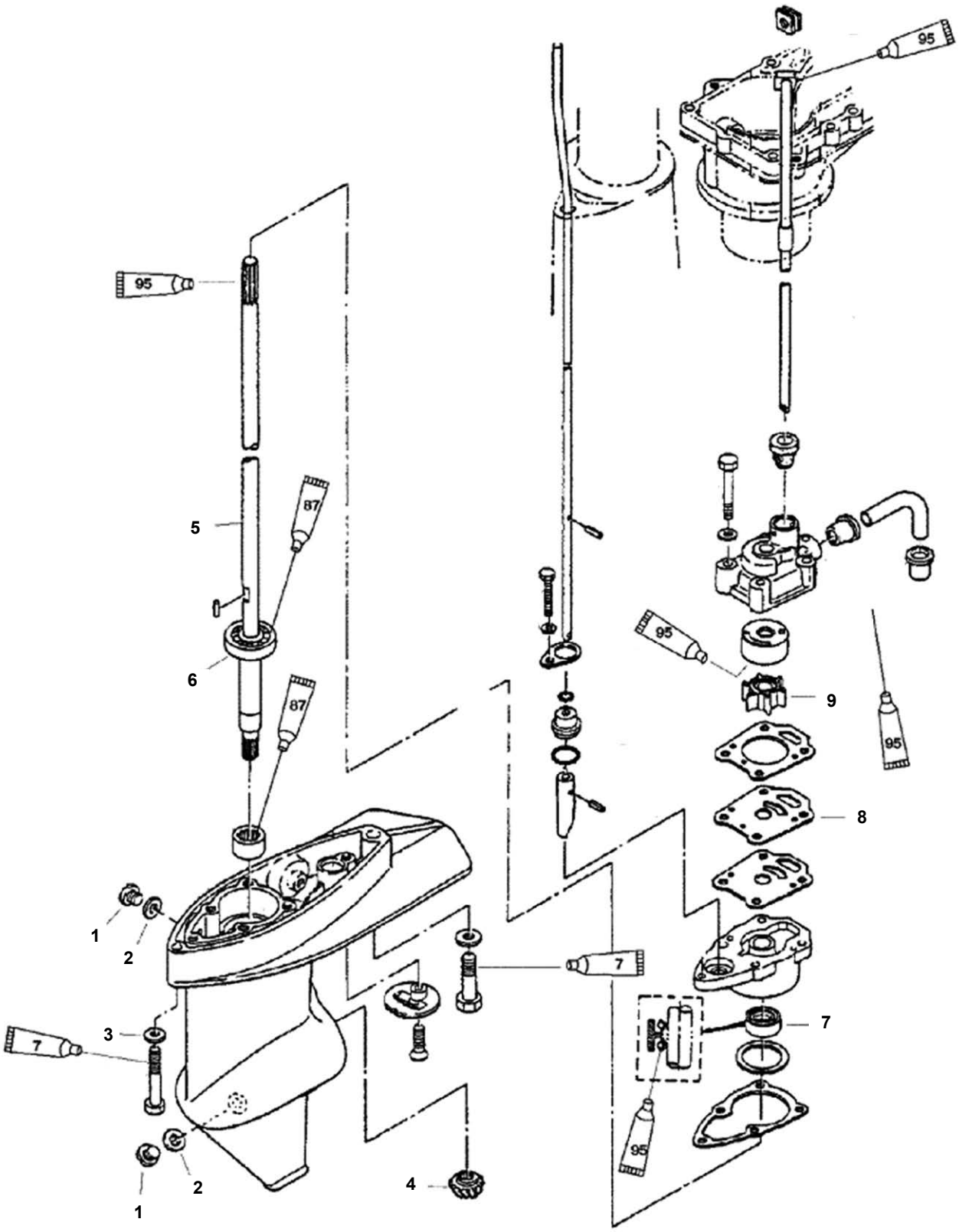

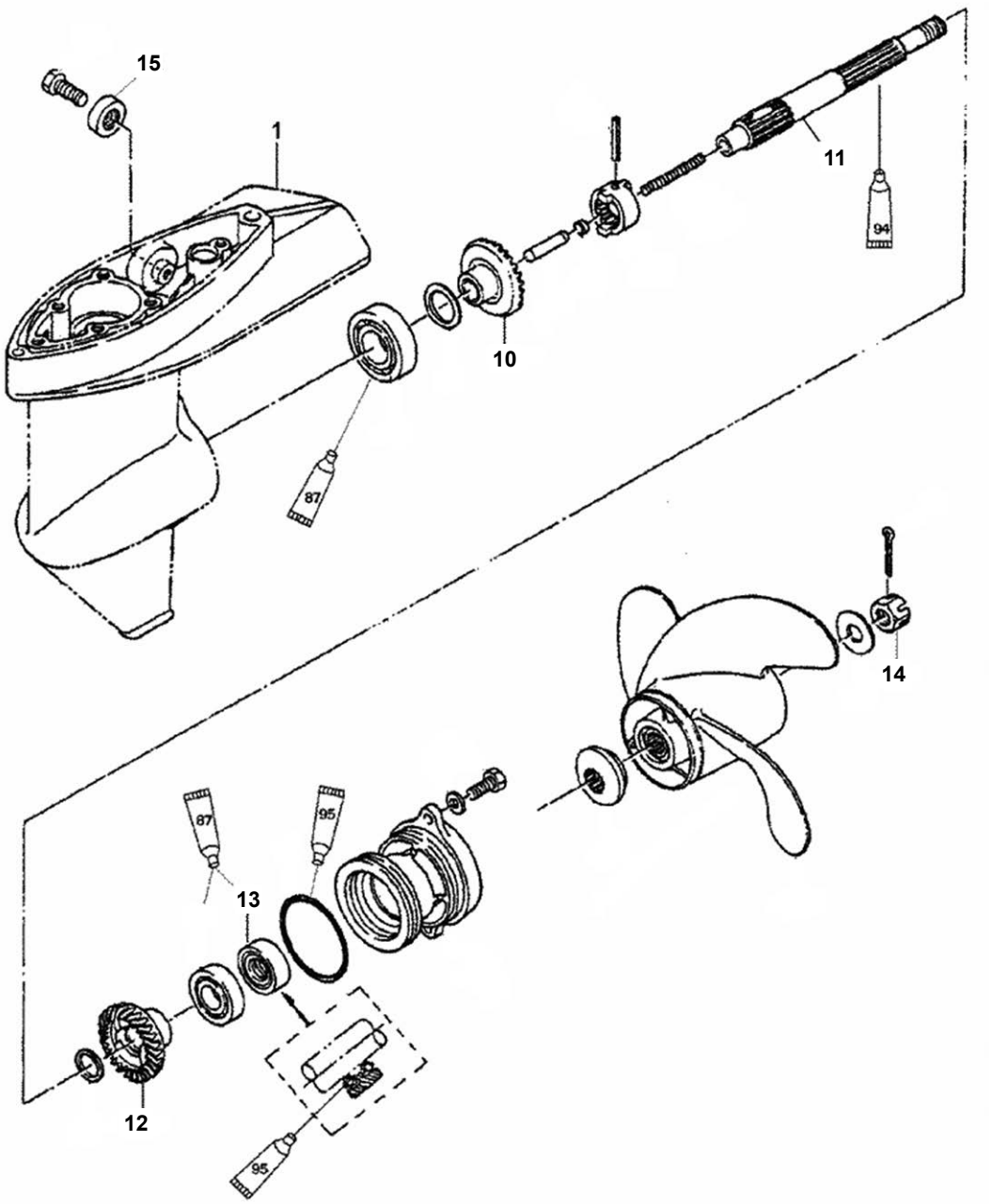

Nº	R.O./OEM	Ref.	Descripción	Description	Descrizione
1	22-95368 3	**PAF4-03000023**	TAPÓN	PLUG	TAPPO
2	27-95220	**PAF8-03000024**	JUNTA	GASKET	GUARNIZIONE
3	12-16826	**PAGB/T97.1-6**	ARANDELA	WASHER	RONDELLA
4	43-16138	**REC43-16138**	ENGRANAJE	GEAR	INGRANAGGIO
5	45-16135 1	**REC45-161351**	EJE	DRIVESHAFT	ASSE
5	45-16136 1	**REC45-8M0076368**	EJE	DRIVESHAFT	ASSE
6	30-95347	**REC30-95347**	COJINETE	BEARING	CUSCINETTO
7	26-16162	**REC26-16162**	RETÉN ACEITE	OIL SEAL	PARAOLIO
8	16159	**REC16159**	PLACA	PLATE	PIASTRA
9	47-16154 3	**REC47-161543**	IMPULSOR	IMPELLER	GIRANTE
10	812944	**REC43-812944**	ENGRANAJE	GEAR	INGRANAGGIO
11	19513 3	**REC44-195133**	EJE IMPULSOR	PROPELLER SHAFT	ASSE GIRANTE
12	812945 1	**REC43-8129451**	ENGRANAJE, INVERSO	GEAR, REVERSE	PIGNONE MARCIA INDIETRO
13	16130	**REC26-16130**	RETÉN ACEITE	OIL SEAL	PARAOLIO
14	16147	**REC11-16147Q**	TUERCA HÉLICE	PROP NUT	DADO CHIUSURA ELICA
15	823912	**TEN00823**	ÁNODO REDONDO	ANODE ROUND	ANODO TONDO
15	875208	**CM3H6-60218-000**	ÁNODO CUADRADO	ANODE SQUARE	ANODO

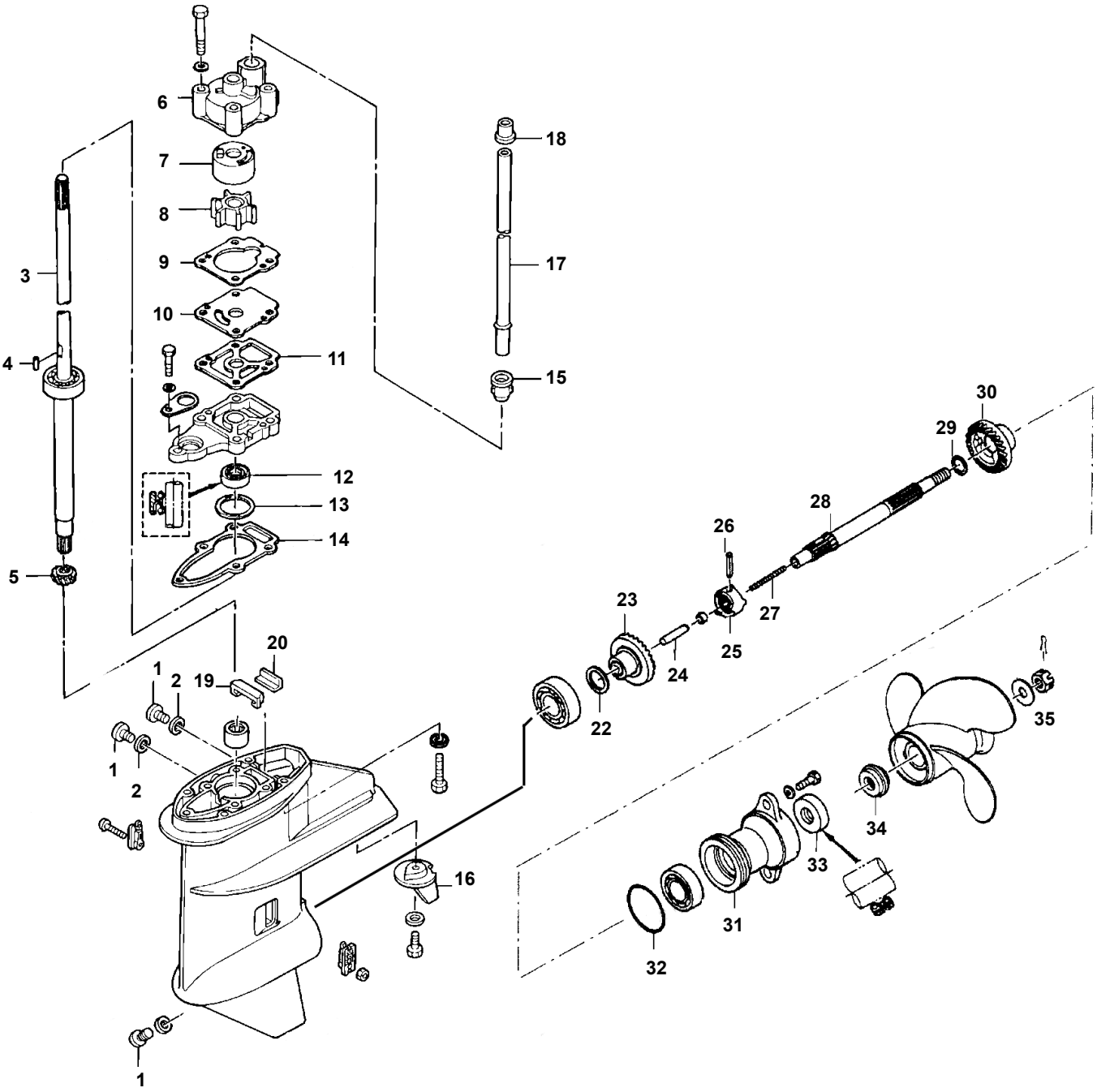

Ref.	R.O.
REC3B2-87321-00	27-8M0082883

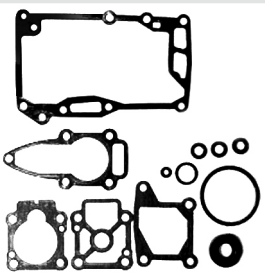

Kit retenes cola
Gearcase seal kit
Kit tenuta piede

Nº	R.O./OEM	Ref.	Descripción	Description	Descrizione
1	95368 3	**PAF4-03000023**	TAPÓN	PLUG	TAPPO
2	95220	**PAF4-03000024**	JUNTA	GASKET	GUARNIZIONE
3	803738004	**PAF8-04020001S**	EJE COLA	DRIVE SHAFT	ASSE PIEDE
3	803738005	**PAF8-04020001L**	EJE COLA	DRIVE SHAFT	ASSE PIEDE
4	95218 11	**PAF8-04000021**	PIN, ACERO INOX.	PIN, ROLL STAINLESS STEEL	CHIAVETTA INOX
5	803740 1	**PAF8-04000003**	PIÑÓN	GEAR, PINION	INGRANAGGIO
6	803750A02	**PAF8-04000009**	CUERPO BOMBA	HOUSING ASSEMBLY	CORPO POMPA
7	803751 1	**PAF8-04000010**	TAPA BOMBA	LINER	COPERCHIO POMPA
8	803748 1	**PAF8-04000200**	IMPULSOR	IMPELLER	GIRANTE
9	16158 5	**PAF8-04000008**	JUNTA	GASKET	GUARNIZIONE
10	803753 1	**PAF8-04000007**	PLACA	GUIDE PLATE	PIASTRA
11	16158 6	**PAF8-04000006**	JUNTA	GASKET	GUARNIZIONE
12	95348	**PAF8-04000101**	RETÉN ACEITE	OIL SEAL	PARAOLIO
13	853795 5	**PAF8-04000004-1**	GRUESO	SHIM	SPESSORE
14	16158 7	**PAF8-04000005**	JUNTA	GASKET	GUARNIZIONE
15	804903	**PAF8-04000013**	RETÉN AGUA	GROMMET	GOMMINO TENUTA ACQUA
16	853762T01	**CM3V1-60217-0**	ÁNODO	ANODO	ANODO
17	803755004	**PAF8-02000006S**	TUBO AGUA	WATER TUBE	TUBO ACQUA
17	803755005	**PAF8-02000006L**	TUBO AGUA	WATER TUBE	TUBO ACQUA
18	804899002	**PAF8-02000007**	RETÉN AGUA	GROMMET	GOMMINO TENUTA ACQUA
19	895155	**PAF8-04000016**	RETÉN AGUA	SEAL WATER	GUARNIZ. TENUTA ACQUA
20	895156	**PAF8-04000015**	PLACA, RETÉN AGUA	PLATE, SEAL WATER	PIASTRA, TENUTA ACQUA
21	804908A00	**REC3B2-87321-0**	KIT JUNTAS	GASKET SET	KIT GAURNIZIONE
22	16141	**PAF8-04000012-1**	GRUESO 0,1	SHIM 0,1	SPESSORE 0,1
22	813277	**PAF8-04000012-2**	GRUESO 0,15	SHIM 0,15	SPESSORE 0,15
23	803739 1	**PAF8-04010000**	MARCHA ADELANTE	GEAR, FORWARD	MARCIA AVANTI
24	16152	**PAF8-04000305**	PASADOR	FOLLOWER CAM	CHIAVETTA
25	803745 1	**PAF8-04000303**	SELECTOR	CLUTCH	SELETTORE
26	16150	**PAF8-04010000**	PIN, SELECTOR	CLUTCH PIN	SPINOTTO SELETTORE
27	892777002	**PAF8-04000302**	MUELLE 58 mm	SPRING 58 mm	MOLLA 58 mm
28	803744002	**PAF8-04000301**	EJE HÉLICE	PROPELLER SHAFT	ASSE ELICA
29	16140	**PAF8-044000012**	ARANDELA	WASHER	RONDELLA
30	803741 1	**PAF8-04000014**	MARCHA ATRÁS	GEAR, REVERSE	MARCIA INDIETRO
31	8037632T03	**PAF8-04040001**	COJINETE DIÁBOLO	CARRIER BEARING	CUSCINETTO
32	16131	**PAF8-04040002**	ARO	O-RING	O-RING
33	16130	**PAF8-04040004**	RETÉN ACEITE	SEAL, OIL	PARAOLIO
34	803743002	**PAF8-04000019**	CIERRE HÉLICE	THRUST HOLDER	CHIUSURA ELICA
35	16147	**PAF15-06000016**	TUERCA HÉLICE	PROP NUT	DADO ELICA

4 STROKES TIEMPOS

8 HP BODENSEE (INTER.)
9.9 HP (232 CC)
13.5 HP (INTER.)
15 HP

2 STROKES TIEMPOS

6, 8, 9.9, 10, 13.5, 15 HP
(1986-05)

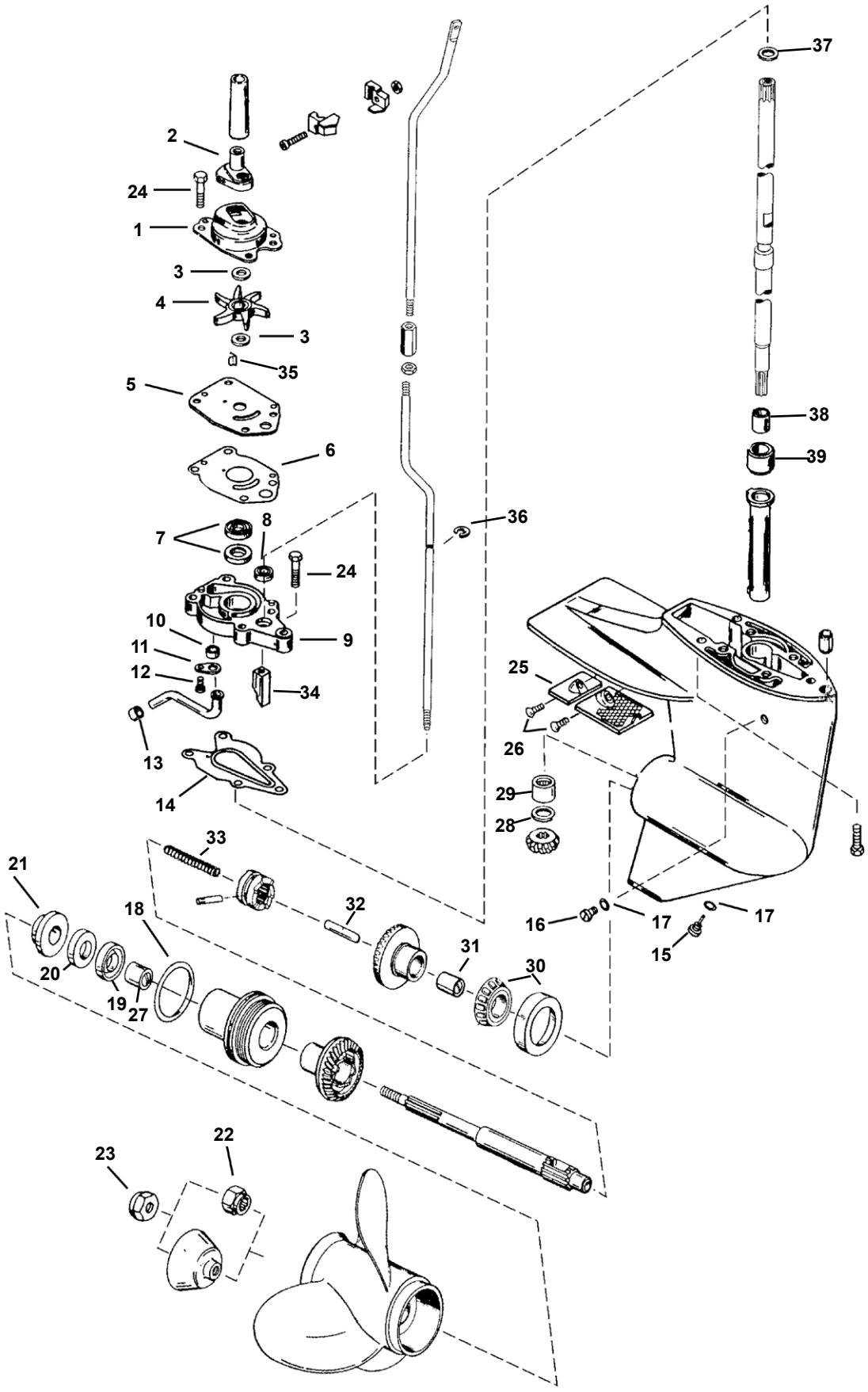

Nº	R.O./ OEM	Ref.	Descripción	Description	Descrizione
1	46-42089A2	**REC46-42089A2**	CUERPO BOMBA	PUMP HOUSING	CORPO POMPA
2	26-42102-1	**REC26-421021**	GRUESO	GROMMET	SPESSORE
3	12-16448	**REC12-16448**	ARANDELA	WASHER	RONDELLA
4	47-42038-2	**REC47-420382**	IMPULSOR	IMPELLER	GIRANTE
5	42200	**REC42200**	TAPA BOMBA	WEAR PLATE	COPERCHIO POMPA
6	27-19202	**REC27-19202001**	JUNTA	GASKET	GUARNIZIONE
7	26-41365-1	**REC26-413651**	RETÉN ACEITE	OIL SEAL	PARAOLIO
8	25-822236	**REC25-822236**	ARO	QUAD RING	O-RING
9	46-42040T5	**REC46-42040T5**	BASE BOMBA	PUMP BASE ASSEMBLY	BASE POMPA
10	26-42133	**REC26-42133**	RETÉN	SEAL	TENUTA
11	42375	**REC42375**	RETENEDOR	RETAINER	RITENITORE
12	10-48408	**REC10-48408**	TORNILLO	SCREW	VITE
13	26-33613	**REC26-33613**	RETÉN	SEAL	GOMMINO TENUTA
14	27-19204-3	**REC27-192043**	JUNTA	GASKET	GUARNIZIONE
15	22-67892A1	**REC22-67892A05**	JUEGO TORNILLOS DRENAJE	DRAINING SCREW SET	KIT VITI DRENAGGIO
16	10-79953Q2	**REC10-79953Q04**	JUEGO TORNILLOS	SCREW SET	KIT VITI
17	12-19183-3	**REC12-191833**	JUNTA	GASKET	GUARNIZIONE
18	25-33145	**REC25-33145**	ARO TÓRICO	O-RING	O-RING
19	26-66022	**REC26-66022**	RETÉN ACEITE DISEÑO I	OIL SEAL (DESIGN I)	PARAOLIO (DESIGN I)
19	26-99325	**REC26-99325**	RETÉN ACEITE DISEÑO II	OIL SEAL (DESIGN II)	PARAOLIO (DESIGN II)
20	26-821928	**REC26-821928**	RETÉN ACEITE DISEÑO III	OIL SEAL (DESIGN III)	PARAOLIO (DESIGN III)
21	821932-1	**REC8219321**	CIERRE HÉLICE	THRUST HUB	CHIUSURA ELICA
22	23-42091-1	**REC23-420911**	ESPACIADOR	SPACER	DISTANZIALE
23	11-40140	**REC11-40140**	TUERCA HÉLICE	PROP NUT	DADO ELICA
24	10-826844-30	**REC10-82684430**	TORNILLO	SCREW	VITE
25	42121A2	**CM42121A2**	ANODO ZINC	ANODE ZINC	ANODO ZINCO
25	42121A2	**CM42121**	ANODO ALUMINIO	ANODE ALUMINUM	ANODO ALLUMINIO
26	10-13954	**REC10-13954**	TORNILLO	SCREW	VITE
27	23-821927	**REC23-821927**	CASQUILLO	BUSHING	BOCCOLA
28	12-41369	**REC12-41369**	ARANDELA	WASHER	RONDELLA
29	31-22756	**REC31-22756**	RODAMIENTO	BEARING	CUSCINETTO
30	31-821321A1	**REC31-821321A1**	RODAMIENTO	BEARING	CUSCINETTO
31	23-41367	**REC23-41367**	CASQUILLO	BUSHING	BOCCOLA
32	813139	**REC813139**	LEVA SELECTOR	CAM FOLLOWER	CHIAVETTA SELETTORE
33	24-42204	**REC24-42204**	MUELLE	SPRING	MOLLA
34	42039	**REC42039**	LEVA CAMBIO	SHIFT CAM	ASSE CAMBIO
35	28-42376A2	**REC28-42376A2**	CHAVETA	KEY	CHIAVETTA
36	52-42389	**REC52-42389**	CLIP	CLIP	CLIP
37	12-822248	**REC12-822248**	ARANDELA	WASHER	RONDELLA
38	23-823943	**REC23-823943**	CASQUILLO	BUSHING	BOCCOLA
39	23-823944	**REC23-823944**	CASQUILLO	SLEEVE	BOCCOLA

Ref.	R.O.
REC26-41365A3	26-41365A3

Kit retenes cola
Gearcase seal kit
Kit tenuta piede

Ref.	R.O.
REC47-42038Q3	47-42038Q3

Kit reparación Bomba agua
Water Pump kit
Kit riparazione Pompa acqua

Ref.	R.O.
REC46-42089A5	46-42089A5

Kit reparación Bomba agua
Water Pump kit
Kit riparazione Pompa acqua

8 HP BODENSEE (INTER.)
9.9 HP (232 CC)
13.5 HP (INTER.)
15 HP

4 TIEMPOS / STROKES

2 TIEMPOS / STROKES

18XD, 20, 25 HP (1984-05)

Ref.	R.O.
REC46-99157T2	46-99157T2

Kit reparación Bomba agua
Water Pump kit
Kit riparazione Pompa acqua

Ref.	R.O.
REC47-85089Q4	47-85089Q4

Kit reparación Bomba agua
Water Pump kit
Kit riparazione Pompa acqua

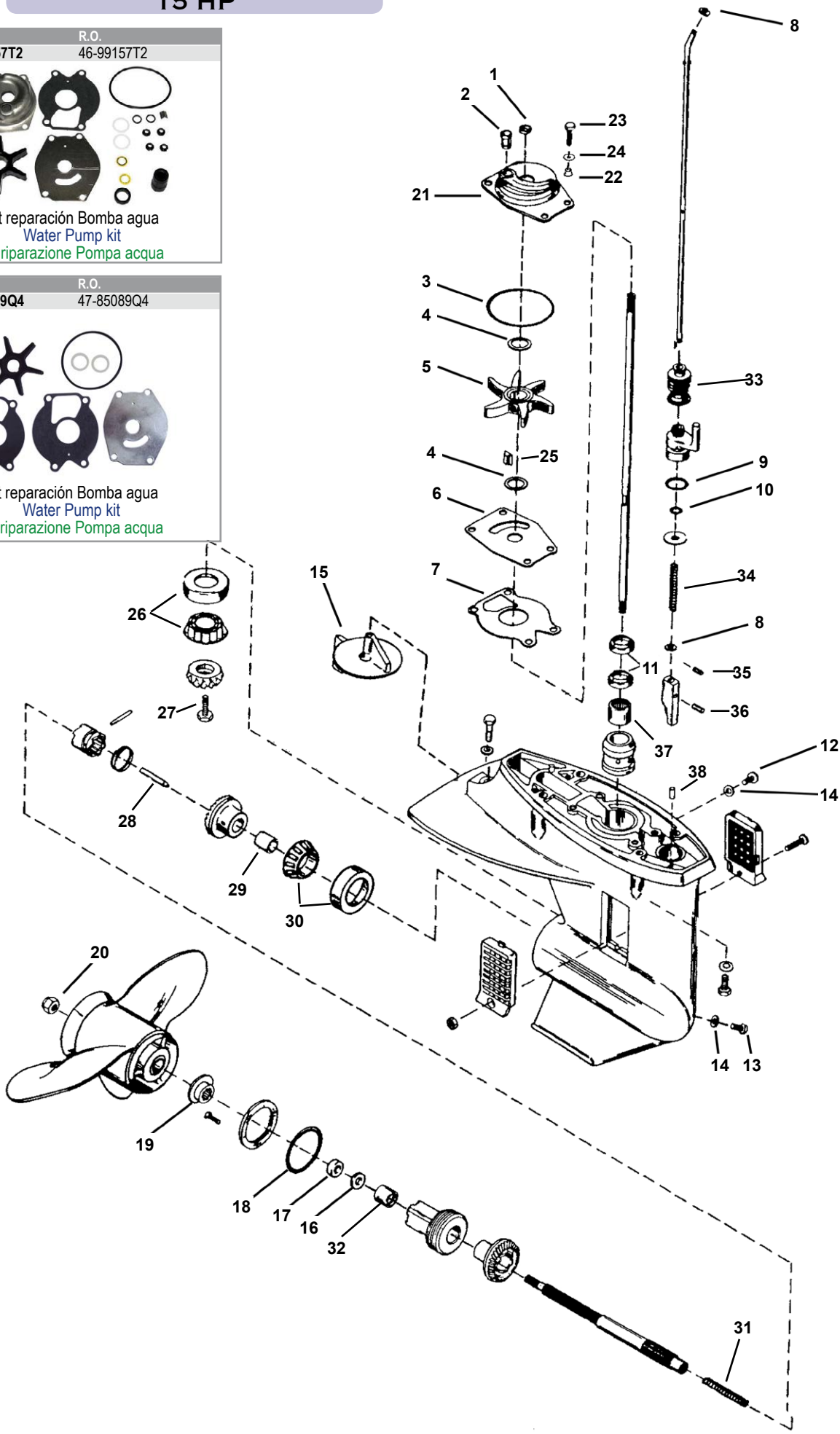

Nº	R.O./ OEM	Ref.	Descripción	Description	Descrizione
1	25-86203	**REC25-86203**	RETÉN	SLINGER	TENUTA
2	26-85090	**REC26-85090001**	GRUESO	GROMMET	SPESSORE
3	25-69202	**REC25-69202**	ARO TÓRICO	O-RING	O-RING
4	12-86645-1	**REC12-86645**	ARANDELA	WASHER	RONDELLA
5	47-85089-10	**REC47-8508910**	IMPULSOR	IMPELLER	GIRANTE
6	85083	**REC85083**	TAPA BOMBA	WEAR PLATE	COPERCHIO POMPA
7	27-99326-1	**REC27-993261**	JUNTA	GASKET	GUARNIZIONE
8	12-29245	**REC12-29245**	ARANDELA	WASHER	RONDELLA
9	25-35276	**REC310584**	ARO TÓRICO	O-RING	O-RING
10	25-85594	**REC25-85594**	ARO TÓRICO	O-RING	O-RING
11	26-99325	**REC301877**	RETÉN	OIL SEAL	PARAOLIO
12	10-79953Q2	**REC10-79953Q04**	JUEGO TORNILLOS	SCREW SET	KIT VITE
13	22-67892A1	**REC22-67892A05**	JUEGO TORNILLOS DRENAJE	DRAINING SCREW SET	KIT VITE DRENAGGIO
14	12-19183-3	**REC12-191833**	JUNTA	GASKET	GUARNIZIONE
15	98432T6	**TEN00812**	ANODO ZINC	TRIM TAB ZINC	ANODO ZINCO
15	98432T6	**CM984325A**	ANODO ALUMINIO	TRIM TAB ALUMINUM	ANODO ALLUMINIO
16	26-41132	**REC26-41132**	RETÉN ACEITE	OIL SEAL	PARAOLIO
17	26-41131	**REC26-41131**	RETÉN ACEITE	OIL SEAL	PARAOLIO
18	25-85549	**REC25-85549**	ARO TÓRICO	O-RING	O-RING
19	858498	**REC858498**	CIERRE HÉLICE	THRUST HUB	CHIUSURA ELICA
20	11-88228	**REC11-88228**	TUERCA HÉLICE (PLÁSTICO)	PROP NUT (PLASTIC)	DADO ELICA (PLASTICA)
20	11-40119-12	**REC11-4011912**	TUERCA HÉLICE	PROP NUT (SEA PRO, MARATHON, 15, 25, SUPER 15)	DADO ELICA
21	46-99157A02	**REC46-99157A02**	CUERPO BOMBA	PUMP HOUSING	CORPO POMPA
22	23-85095	**REC23-85095**	CIERRE	INSULATOR	CHIUSURA
23	10-824832-4	**REC10-8248324**	TORNILLO	SCREW	VITE
24	12-89302	**REC12-29245**	ARANDELA	WASHER	RONDELLA
25	28-8M0032838	**REC28-8M0032838**	CHAVETA	KEY	CHIAVETTA
26	31-98294A1	**REC31-98294A1**	RODAMIENTO	BEARING	CUSCINETTO
27	10-49908	**REC10-49908**	TORNILLO	SCREW	VITE
28	85094	**REC85094**	LEVA	CAM FOLLOWER	CHIAVETTA
29	23-85557	**REC23-85557**	CASQUILLO	BUSHING	BOCCOLA
30	31-99328A1	**REC31-66668A1**	RODAMIENTO	BEARING	CUSCINETTO
31	24-88680	**REC24-88680**	MUELLE	SPRING	MOLLA
32	31-21739	**REC31-21739**	RODAMIENTO AGUJAS	BEARING, NEEDLE	CUSCINETTO
33	85552001	**REC85552001**	LEVA FUELLE	SHIFT BOOT	CUFFIA DEL CAMBIO
34	24-93007	**REC24-93007**	MUELLE	SPRING	MOLLA
35	17-85593	**REC17-85593**	PASADOR	ROLL PIN	SPINOTTO
36	17-85096	**REC85096**	PASADOR	DRIVE PIN	SPINOTTO
37	31-41326	**REC31-41326**	RODAMIENTO	BEARING, UPPER DRIVE SHAFT	CUSCINETTO
38	17-85500	**REC17-85500**	PIN	ALIGNMENT PIN	SPINOTTO

Ref.	R.O.
REC26-85090A2	26-85090A2

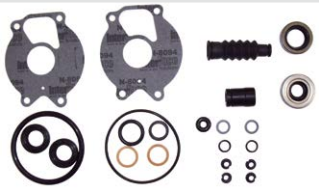

Kit retenes cola (1984+)
Gearcase seal kit (1984+)
Kit tenuta piede (1984+)

Ref.	R.O.
REC26-85090A1	26-85090A1

Kit retenes cola (-1993)
Gearcase seal kit (-1993)
Kit tenuta piede (-1993)

25 HP
30, 40 HP (CARB 3 CYL) (EFI)
40 ITALY
45 BODENSEE
50 HP

25 - 50 HP (1997-06)

Ref.	R.O.
REC823547A2	823547A2

Kit retenes cola
Gearcase seal kit
Kit tenuta piede

Ref.	R.O.
REC821354A2	821354A2

Kit reparación Bomba agua
Water Pump kit
Kit riparazione Pompa acqua

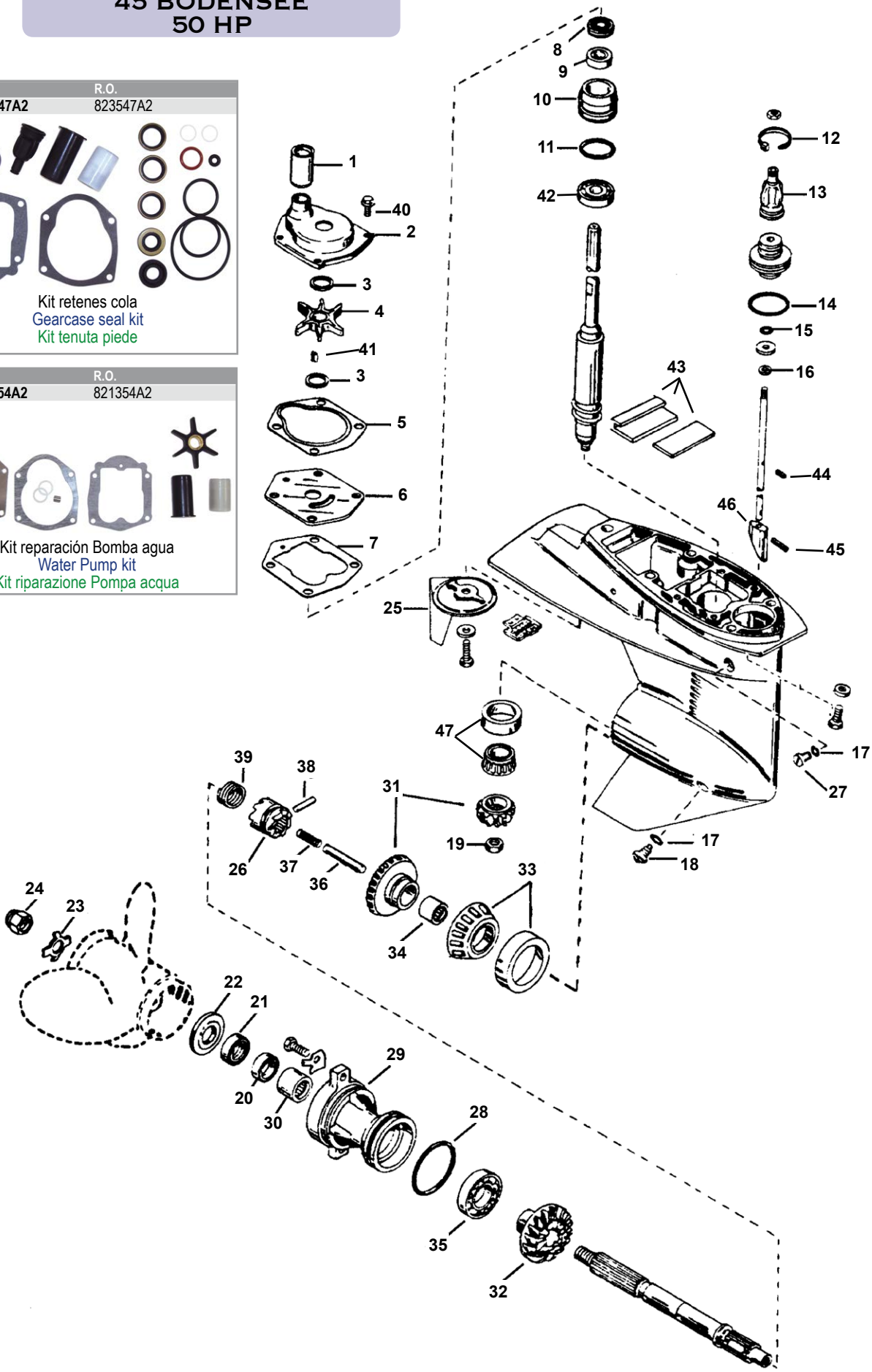

Nº	R.O./ OEM	Ref.	Descripción	Description	Descrizione
1	823547-1	**REC8235471**	RETÉN TUBO AGUA	WATER TUBE SEAL	TENUTA TUBO ACQUA
2	46-821351A3	**REC46-821351A3**	CUERPO BOMBA	PUMP HOUSING	CORPO POMPA
3	12-86645-1	**REC12-86645**	ARANDELA	WASHER	RONDELLA
4	47-85089-3	**REC47-8508910**	IMPULSOR	IMPELLER	GIRANTE
5	27-822189	**REC27-822189**	JUNTA	GASKET	GUARNIZIONE
6	821354-2	**REC8213542**	TAPA BOMBA	WEAR PLATE	COPERCHIO POMPA
7	27-822217	**REC27-822217**	JUNTA	GASKET	GUARNIZIONE
8	26-821309	**REC26-821309**	RETÉN ACEITE	OIL SEAL	PARAOLIO
9	26-821310	**REC26-821310**	RETÉN ACEITE	OIL SEAL	PARAOLIO
10	46-821307A2	**REC43-821307A2**	BASE BOMBA	PUMP BASE	BASE POMPA
11	25-821308	**REC25-821308**	ARO TÓRICO	O-RING	O-RING
12	823548	**REC8M0064024**	ABRAZADERA	CABLE TIE	FASCETTA
13	822158	**REC822158**	BOTA	BOOT	BOOT
14	25-26855	**REC3852928**	ARO TÓRICO	O-RING	O-RING
15	25-85594	**REC25-85594**	ARO TÓRICO	O-RING	O-RING
16	12-29245	**REC12-29245**	ARANDELA	WASHER	RONDELLA
17	12-19183-3	**REC12-191833**	JUNTA	GASKET	GUARNIZIONE
18	22-67892A1	**REC22-67892A05**	TORNILLO DRENAJE	DRAINING SCREW	VITE DRENAGGIO
19	11-55910	**REC313359**	TUERCA PIÑÓN	PINION NUT	DADO PIGNONE
20	26-69188	**REC26-69188**	RETÉN ACEITE	OIL SEAL	PARAOLIO
21	26-69189	**REC26-69189**	RETÉN ACEITE	OIL SEAL	PARAOLIO
22	73345A1	**REC73345A1**	CIERRE HÉLICE	THRUST HUB	CHIUSURA ELICA
23	14-76281	**REC14-76281Q**	ARANDELA	TAB WASHER	RONDELLA
24	11-69578A1	**REC11-69578Q1**	TUERCA HÉLICE	PROP NUT	DADO ELICA
25	822157T2	**CM822157T2**	ANODO ZINC	ANODE ZINC	ANODO ZINCO
25	822157T2	**TEN00829AL**	ANODO ALUMINIO	ANODE ALUMINUM	ANODO ALLUMINIO
26	52-812314T		SELECTOR	CLUTCH DOG	SELETTORE
27	10-79953Q2	**REC10-79953Q04**	JUEGO TORNILLOS	SCREW SET	KIT VITI
28	25-815460	**REC25-80863**	ARO TÓRICO	O-RING	O-RING
29	19291A3	**REC19291A3**	COJINETE DIABOLO	BEARING CARRIER	CUSCINETTO
30	31-21700	**REC31-21700**	COJINETE	BEARING	CUSCINETTO
31	43-803498T1	**REC43-803498T1**	KIT PIÑONES MARCHA ADELANTE	P/FORWARD GEAR SET	KIT PIGNONE MARCIA AVANTI
32	43-822163T1	**REC43-822163T1**	MARCHA ATRÁS	REVERSE GEAR	MARCIA INDIETRO
33	31-99328A1	**REC19949**	COJINETE	BEARING	CUSCINETTO
34	31-41326	**REC31-41326**	COJINETE	BEARING	CUSCINETTO
35	30-20839T	**REC30-20839T**	COJINETE	BEARING	CUSCINETTO
36	821578	**REC821578**	PASADOR	CAM FOLLOWER	CHIAVETTA
37	24-826199-1	**REC24-8261991**	MUELLE	SPRING	MOLLA
38	17-85093	**REC17-8M0020999**	PASADOR	CROSS PIN	CHIAVETTA
39	24-38114	**REC24-38114**	MUELLE	SPRING	MOLLA
40	10-824832-4	**REC10-8248324**	TORNILLO	SCREW	VITE
41	28-8M0032838	**REC28-8M0032838**	CHAVETA	KEY	CHIAVETTA
42	30-821311	**REC30-821311**	RODAMIENTO	BEARING	CUSCINETTO
43	818226A1	**REC818226A1**	KIT RETÉN ESCAPE	SEAL EXHAUST KIT	KIT TENUTA SCARICO
44	17-85593	**REC17-85593**	PIN	PIN	SPINOTTO
45	17-822369	**REC17-822369**	PIN	PIN	SPINOTTO
46	8213161	**REC8213161**	LEVA CAMBIO	SHIFT CAM	ALBERO CAMBIO
47	31-821321A1	**REC31-821321A1**	RODAMIENTO	BEARING	CUSCINETTO

Ref.	R.O.
REC26-814669A2	26-814669A2

Kit retenes cola
Gearcase seal kit
Kit tenuta piede

Ref.	R.O.
REC46-812966A12	46-812966A12

Kit reparación Bomba agua
Water Pump kit
Kit riparazione Pompa acqua

Ref.	R.O.
REC46-812966A11	46-812966A11

Kit reparación Bomba agua
Water Pump kit
Kit riparazione Pompa acqua

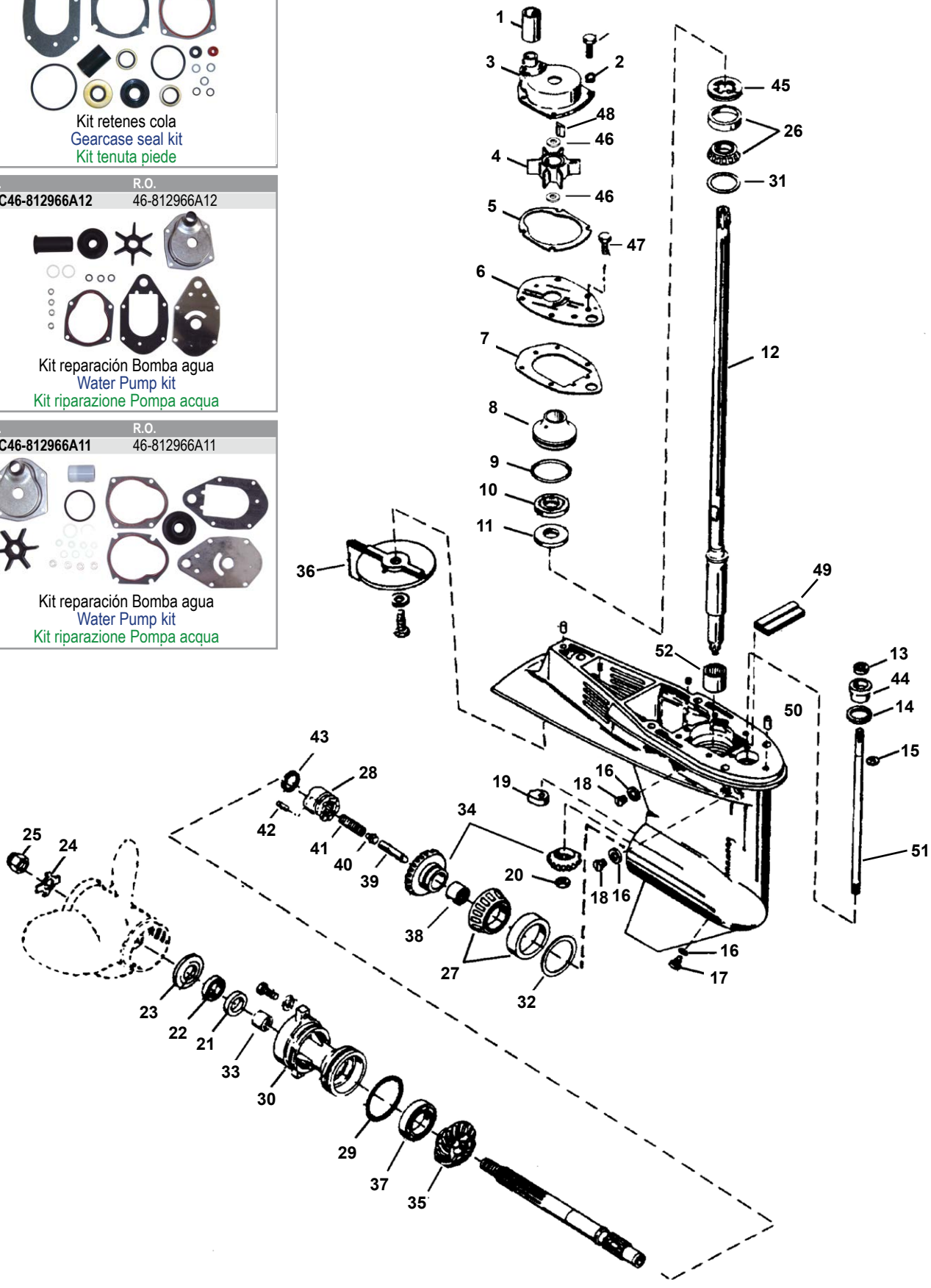

Nº	R.O./ OEM	Ref.	Descripción	Description	Descrizione
1	43023	**REC43023**	TUBO AGUA	TUBE SEAL	TUBO ACQUA
1	859770-1	**REC8597701**	TUBO AGUA (4 TIEMPOS)	TUBE SEAL (FOR 4-STROKE)	TUBO ACQUA (4 TEMPI)
2	23-43045	**REC23-43045**	CARQUILLO	INSULATOR	GHIERA
3	14334A3	**REC14334A3**	CUERPO BOMBA AGUA	PUMP HOUSING	CORPO POMPA
4	47-19453T	**REC47-19453T**	IMPULSOR	IMPELLER	GIRANTE
5	27-822189	**REC27-822189**	JUNTA	GASKET	GUARNIZIONE
6	19700A2	**REC19700A2**	TAPA BOMBA AGUA	WEAR PLATE	COPERCHIO POMPA ACQUA
7	27-19701	**REC27-8M4502052**	JUNTA	GASKET	GUARNIZIONE
8	46-812966A7	**REC46-812966A7**	BASE BOMBA AGUA	PUMP BASE	BASE POMPA ACQUA
9	25-30224	**REC25-30224**	ARO TÓRICO	O-RING	O-RING
10	26-814670	**REC26-814670**	RETÉN ACEITE	OIL SEAL	PARAOLIO
11	26-814669	**REC26-814669**	RETÉN ACEITE	OIL SEAL	PARAOLIO
12	45-812731	**REC5-812731**	EJE TRANMISIÓN	DRIVE SHAFT (LONG)	ASSE TRASMISSIONE
13	26-816464-1	**REC26-8164641**	RETÉN ACEITE	OIL SEAL	PARAOLIO
14	25-45258	**REC25-45258**	ARO TÓRICO	O-RING	O-RING
15	53-29641	**REC53-29641**	ARO RETENEDOR	RETAINING RING	O-RING
16	12-19183-3	**REC12-191833**	JUNTA	GASKET	GUARNIZIONE
17	22-67892A1	**REC22-67892A05**	TORNILLO DRENAJE	DRAINING SCREW	VITE DRENAGGIO
18	10-79953Q2	**REC10-79953Q4**	JUEGO TORNILLOS	SCREW KIT	KIT VITE
19	76039-4	**REC760394**	LEVA	SHIFT CAM	LEVA
20	11-55910	**REC313359**	TUERCA PIÑÓN	PINION NUT	DADO PIGNONE
21	26-69188	**REC26-69188**	RETÉN ACEITE	OIL SEAL	PARAOLIO
22	26-69189	**REC26-69189**	RETÉN ACEITE	OIL SEAL	PARAOLIO
23	73345A1	**REC73345A1**	TOPE HÉLICE	THRUST HUB	PUNTA ELICA
24	14-76281	**REC14-76281Q**	CIERRE HÉLICE	TAB WASHER	CHIUSURA ELICA
25	11-69758A1	**REC11-69578Q1**	TUERCA HÉLICE	PROP NUT	DADO ELICA
26	31-77420A1	**REC31-77420A1**	COJINETE	BEARING	CUSCINETTO
27	31-812767A1	**REC31-812767A1**	COJINETE	BEARING	CUSCINETTO
28	52-850048T	**REC52-850048T**	SELECTOR	CLUTCH DOG	SELETTORE
29	25-815460	**REC5-815460**	ARO TÓRICO	O-RING	O-RING
30	19291A3	**REC19291A3**	COJINETE DIÁBOLO	BEARING CARRIER	CUSCINETTO
31	15-812770A1	**REC15-812770A1**	JUEGO SUPLEMENTOS	SHIM SET	KIT SPESSORI
32	15-812769A1	**REC15-812769A1**	JUEGO SUPLEMENTOS	SHIM SET	KIT SPESSORI
33	31-21700	**REC31-21700**	COJINETE	BEARING	CUSCINETTO
34	43-803499T1	**REC43-803499T1**	KIT PIÑONES MARCHA ADELANTE 1.64:1	P/FORWARD GEAR SET (1.64:1 RATIO)	KIT PIGNONE MARCIA AVANTI 1.64:1
35	43-813695T	**REC43-813695T**	MARCHA ATRÁS	REVERSE GEAR	MARCIA INDIETRO
36	17264T2	**TEN00827**	ANODO ZINC	TRIM TAB ZINC	ANODO ZINCO
37	30-20839T	**REC30-20839T**	COJINETE	BEARING	CUSCINETTO
38	31-21739	**REC31-21739**	COJINETE	BEARING	CUSCINETTO
39	812929-1	**REC812929-1**	PASADOR	CAM FOLLOWER	CHIAVETTA
40	20843	**REC20843**	PASADOR	SLIDE	CHIAVETTA
41	24-815418	**REC24-815418**	MUELLE	SPRING	MOLLA
42	17-38113	**REC17-38113**	PASADOR	CROSS PIN	CHIAVETTA
43	24-30893	**REC24-30893**	MUELLE	SPRING	MOLLA
44	23-813696A2	**REC23-813696A2**	CUERPO VARILLA CAMBIO	BUSHING ASSEMBLY	SEDE ASTICELLA CAMBIO
45	11-812820-1	**REC11-8128201**	TUERCA RETENEDORA	RETAINING NUT	DADO
46	12-858234	**REC8M0005777**	ARANDELA PLÁSTICO	WASHER-PLASTIC	RONDELLA PLASTICA
47	10-824832-4	**REC10-8248324**	TORNILLO	SCREW	VITE
48	28-8M0032831	**REC28-8M0032831**	CHAVETA	KEY	CHIAVETTA
49	818226A1	**REC818226A1**	KIT RETÉN	SEAL PLATE KIT	KIT TENUTA
50	17-43043	**REC17-43043**	PASADOR	PIN	SPINOTTO
51	889246A96	**REC889246A96**	EJE CAMBIO	SHIFT SHAFT	ASSE CAMBIO
52	31-812768	**REC31-812768**	RODAMIENTO	BEARING	CUSCINETTO

50-150 HP (1987+) (4.25" / 107.95 MM) Ø TORPEDO BIG FOOT

30-125 HP (3 / 4 CYL) INLINE (4.25" / 107.95 MM) Ø TORPEDO BIG FOOT

Ref.	R.O.
REC26-43035A4	26-43035A4

Kit retenes cola
Gearcase seal kit
Kit tenuta piede

Ref.	R.O.
REC12094	46-43024A7

Kit reparación Bomba agua
Water Pump kit
Kit riparazione Pompa acqua

Ref.	R.O.
REC47-43026Q06	47-43026Q06

Kit reparación Bomba agua
Water Pump kit
Kit riparazione Pompa acqua

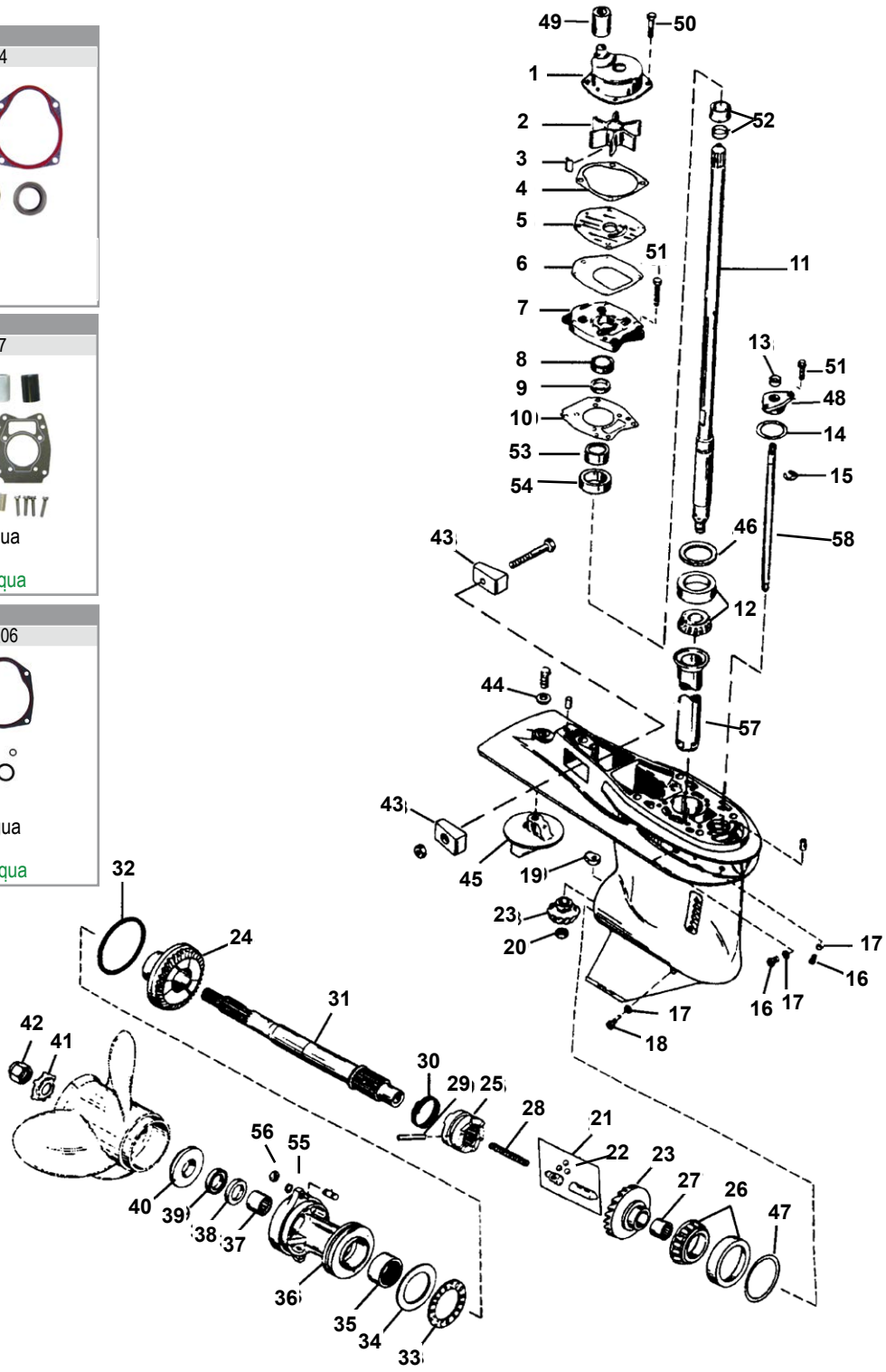

Nº	R.O./ OEM	Ref.	Descripción	Description	Descrizione
1	817275A2	**REC817275A2**	BOMBA AGUA	WATER PUMP ASSEMBLY	POMPA ACQUA
2	47-43026T2	**REC47-43026Q02**	IMPULSOR	IMPELLER	GIRANTE
3	28-43037	**REC28-8M0032833**	CHAVETA	KEY	CHIAVETTA
4	27-817277-1	**REC27-8172771**	JUNTA	GASKET	GUARNIZIONE
5	817276-1	**REC8172761**	TAPA BOMBA	WEAR PLATE	COPERCHIO POMPA
6	27-43033-1	**REC27-430331**	JUNTA	GASKET	GUARNIZIONE
7	43055A4	**REC43055A4**	BASE BOMBA AGUA	PUMP BASE ASSEMBLY	BASE POMPA AQUA
8	26-43036	**REC26-43036**	RETÉN ACEITE	OIL SEAL	PARAOLIO
9	26-43035	**REC26-43035**	RETÉN ACEITE	OIL SEAL	PARAOLIO
10	27-43047-2	**REC27-430472**	JUNTA	GASKET	GUARNIZION
11	45-43031A1	**REC45-43031A1**	EJE TRANMISIÓN (20" 2 TIEMPOS 70-125HP)	DRIVE SHAFT (LONG) (20" 2 STROKES 70-125 HP)	ASSE TRASMISSIONE (20" 2 TEMPI 70-125 HP)

Nº	R.O./ OEM	Ref.	Descripción	Description	Descrizione
11	45-826736A1	**REC45-826736A1**	EJE TRANMISIÓN (20" 2 TIEMPOS 50-60 HP)	DRIVE SHAFT (LONG) (20" 2 STROKES 50-60 HP)	ASSE TRASMISSIONE (20" 2 TEMPI 50-60 HP)
11	45-858765T1	**REC45-858765T1**	EJE TRANMISIÓN (20" 4 TIEMPOS 70-115 HP)	DRIVE SHAFT (LONG) (20" 4 STROKES 70-115 HP)	ASSE TRASMISSIONE (20" 4 TEMPI 70-115 HP)
11	45-878575T1	**REC45-878575T1**	EJE TRANMISIÓN (25" 4 TIEMPOS 70-115 HP)	DRIVE SHAFT (LONG) (25" 4 STROKES 70-115 HP)	ASSE TRASMISSIONE (25" 4 TEMPI 70-115 HP)
11	45-854808A1	**REC45-854808A1**	EJE TRANMISIÓN (20" 4 TIEMPOS 30-50 HP)	DRIVE SHAFT (LONG) (20" 4 STROKES 30-50 HP)	ASSE TRASMISSIONE (20" 4 TEMPI 30-50 HP)
11	45-859105A1	**REC45-859105A1**	EJE TRANMISIÓN (20" 4 TIEMPOS 40-60 HP)	DRIVE SHAFT (LONG) (20" 4 STROKES 40-60 HP)	ASSE TRASMISSIONE (20" 4 TEMPI 40-60 HP)
11	45-875222A1	**REC45-875222A1**	EJE TRANMISIÓN (25" 4 TIEMPOS 40-60 HP)	DRIVE SHAFT (LONG) (25" 4 STROKES 40-60 HP)	ASSE TRASMISSIONE (25" 4 TEMPI 40-60 HP)
12	31-42677A1	**REC31-42677A1**	COJINETE	BEARING	CUSCINETTO
13	26-816464-1	**REC26-8164641**	RETÉN ACEITE	OIL SEAL	PARAOLIO
14	25-45710	**REC91356-ZW1-003**	ARO TÓRICO	O-RING	O-RING
15	53-29641	**REC53-29641**	ARO RETENEDOR	RETAINING RING	O-RING
16	10-79953Q2	**REC10-79953Q4**	JUEGO TORNILLOS	SCREW KIT	KIT VITE
17	12-19183-3	**REC12-191833**	JUNTA	GASKET	GUARNIZIONE
18	22-67892A1	**REC22-67892A05**	TORNILLO DRENAJE	DRAINING SCREW	VITE DRENAGGIO
19	76039-4	**REC760394**	LEVA (3 DIENTES)	SHIFT CAM (3 JAW)	LEVA (3 DENTI)
19	850307	**REC850307**	LEVA (6 DIENTES)	SHIFT CAM (6 JAW)	LEVA (6 DENTI)
20	11-35921	**REC11-35921**	TUERCA HÉLICE	PINION NUT	DADO ELICA
21	850315A1	**REC850315A1**	KIT PASADORES LEVA	CAM FOLLOWER KIT	KIT CHIAVETTA LEVA
22	30-44530	**REC30-44530**	BOLA	BALL	PALLA
23	43-803500T1	**REC43-803500T1**	KIT PIÑONES MARCHA ADELANTE REDUCCIÓN 2.31:1, 3 DIENTES	P/FORWARD GEAR SET (2.31:1 RATIO 3 JAW)	KIT PIGNONE MARCIA AVANTE RIDUZZIONE 2.31:1 3 DENTI
23	43-803501T1	**REC43-803501T2**	KIT PIÑONES MARCHA ADELANTE REDUCCIÓN 2.31:1, 6 DIENTES	P/FORWARD GEAR SET (2.31:1 RATIO 6 JAW)	KIT PIGNONE MARCIA AVANTE RIDUZZIONE 2.31:1 6 DENTI
24	43-12635T	**REC43-12635T**	MARCHA ATRÁS 3 DIENTES	REVERSE GEAR (3 JAW)	MARCIA INDIETRA (3 DENTI)
24	43-850034T	**REC43-850034T**	MARCHA ATRÁS 6 DIENTES	REVERSE GEAR (6 JAW)	MARCIA INDIETRA (6 DENTI)
25	52-822539T	**REC52-822539T**	SELECTOR 3 DIENTES	CLUTCH DOG (3 JAW)	SELETTORE (3 DENTI)
25	52-850048T	**REC52-850048T**	SELECTOR 6 DIENTES	CLUTCH DOG (6 JAW)	SELETTORE (6 DENTI)
26	31-30894A1	**REC31-30894A1**	COJINETE	BEARING	CUSCINETTO
27	31-30895	**REC31-30895T**	COJINETE	BEARING	CUSCINETTO
28	24-30622	**REC24-850327**	MUELLE 3 DIENTES	SPRING (3 JAW)	MOLLA (3 DENTI)
28	24-850327	**REC24-850327**	MUELLE 6 DIENTES	SPRING (6 JAW)	MOLLA (6 DENTI)
29	17-30632	**REC17-8M0084681**	PASADOR	CROSS PIN	CHIAVETTA
30	24-30893	**REC24-30893**	MUELLE	SPRING	MOLLA
31	44-12238T	**REC44-12238T**	EJE HÉLICE 3 DIENTES	PROP SHAFT (3 JAW)	ASSE ELICA (3 DENTI)
31	44-850308	**REC44-850308**	EJE HÉLICE 6 DIENTES	PROP SHAFT (6 JAW)	ASSE ELICA (6 DENTI)
32	25-97386	**REC310414**	ARO TÓRICO	O-RING	O-RING
33	31-12576	**REC31-12576**	COJINETE	THRUST BEARING	CUSCINETTO
34	12-12577	**REC12-12577**	ARANDELA	THRUST WASHER	RONDELLA
35	31-12578T	**REC31-12578T**	COJINETE	BEARING	CUSCINETTO
36	12596T2	**REC12596T2**	COJINETE DIÁBOLO	BEARING CARRIER	CUSCINETTO
37	31-30956	**REC91053-ZW1-003**	COJINETE	BEARING	CUSCINETTO
38	26-76868	**REC26-76868**	RETÉN ACEITE	OIL SEAL	PARAOLIO
39	26-70081	**REC26-70081**	RETÉN ACEITE	OIL SEAL	PARAOLIO
40	13191A1	**REC13191Q01**	TOPE HÉLICE	THRUST HUB	PUNTA ELICA
41	14-816629Q	**REC90508-ZW1-003**	CIERRE HÉLICE	TAB WASHER	CHIUSURA ELICA
42	11-52407Q1	**REC90301-ZW1-003**	TUERCA HÉLICE	PROP NUT	DADO ELICA
43	826134Q	**CM826134**	ANODO ZINC	ANODE ZINC	ANODO ZINCO
43	826134Q	**CM826134A**	ANODO ALUMINIO	ANODE ALUMINUM	ANODO ALLUMINIO
44	12-45176	**REC12-45176**	ARANDELA	WASHER	RONDELLA
45	31640Q4	**CM31640**	ANODO ZINC	TRIM TAB ZINC	ANODO ZINCO
45	31640Q4	**CM31640A**	ANODO ALUMINIO	TRIM TAB ALUMINUM	ANODO ALLUMINIO
46	15-44492A1	**REC15-8M0063265**	JUEGO SUPLEMENTOS	SHIM SET	KIT SUPPLEMENTI
47	15-44491A1	**REC15-44491A1**	JUEGO SUPLEMENTOS	SHIM SET	KIT SUPPLEMENTI
48	23-43052A4	**REC23-43052A4**	CASQUILLO	BUSHING ASSEMBLY	GHIERA
49	43023	**REC43023**	TUBO AGUA BLANCO	WATER TUBE SEAL (WHITE)	TUBO ACQUA BIANCO
49	43023-2	**REC430232**	TUBO AGUA NEGRO	WATER TUBE SEAL (BLACK)	TUBO ACQUA NERO
50	10-826844-30	**REC10-82684430**	TORNILLO	SCREW	VITE
51	10-826844-25	**REC10-85684425**	TORNILLO	SCREW	VITE
52	42461A1	**REC42461A1**	CASQUILLO	SLEEVE / RING KIT	GHIERA
53	26-43036	**REC26-43036**	RETÉN SUPERIOR	SEAL UPPER	TENUTA SUPERIORE
54	26-43035	**REC26-43035**	RETÉN INFERIOR	SEAL LOWER	TENUTA INFERIORE
55	12-855941	**REC12-855941**	ARANDELA	WASHER	RONDELLA
56	11-401378	**REC11-401378**	TUERCA	NUT	DADO
57	43046	**REC43046**	MANGUITO ACEITE	OILER TUBE	TUBO OLIO
58	853906A1	**REC853906A1**	EJE CAMBIO 20"	SHIFT SHAFT 20"	ASSE CAMBIO 20"
58	853908A1	**REC853908A1**	EJE CAMBIO 25"	SHIFT SHAFT 25"	ASSE CAMBIO 25"

135-300 HP VERADO 4, 6 CYL (2006+)

Ref.	R.O.
REC817275A09	817275A09

Kit reparación Bomba agua
Water Pump kit
Kit riparazione Pompa acqua

Ref.	R.O.
REC47-43026Q06	47-43026Q06

Kit reparación Bomba agua
Water Pump kit
Kit riparazione Pompa acqua

Ref.	R.O.
REC26-830749A01	26-830749A01

Kit retenes cola
Gearcase seal kit
Kit tenuta piede

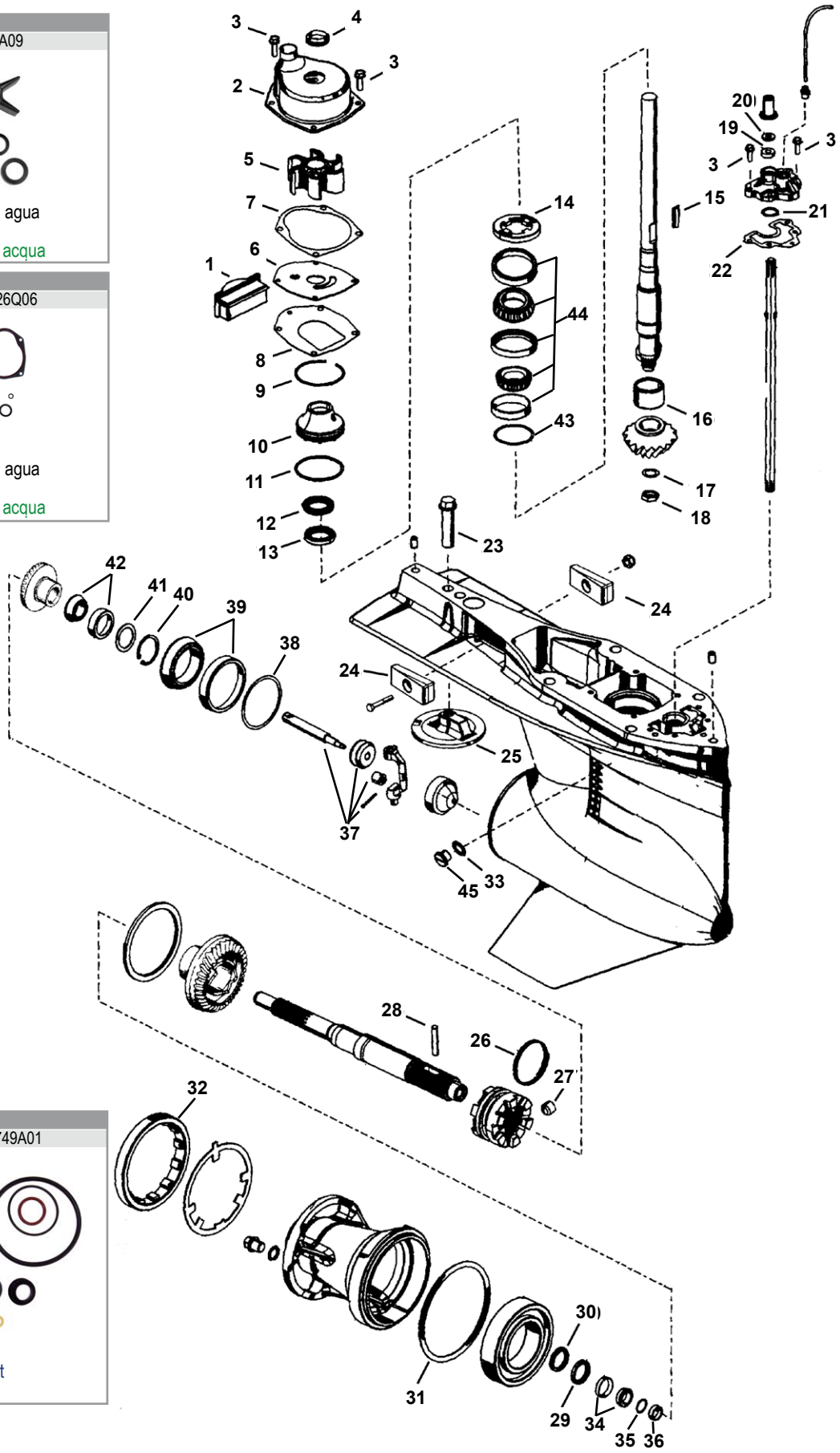

Nº	R.O./OEM	Ref.	Descripción	Description	Descrizione
1	821526001	**REC821526001**	RETÉN	FILLER BLOCK	CORPO SUPERIORE POMPA
2	817275A1	**REC817275A1**	CUERPO SUPERIOR BOMBA	UPPER WATER PUMP HOUSING	VITE (M6-16)
3	10-816928	**REC10-816928**	TORNILLO (M6-16)	SCREW (M6-16)	PARAOLIO
4	26-816575A2	**REC26-816575A2**	RETÉN	FACE SEAL	GIRANTE
5	47-43026T2	**REC47-4302Q02**	IMPULSOR	IMPELLER	COPERCHIO POMPA
6	817276-1	**REC8172761**	TAPA BOMBA	WEAR PLATE	GUARNIZIONE
7	27-817277-1	**REC27-8172771**	JUNTA	GASKET	GUARNIZIONE
8	27-43033-1	**REC27-430331**	JUNTA	GASKET	O-RING
9	53-880719	**REC53-880719**	ARO RETENEDOR	RETAINING RING	BASE POMPA
10	888909A1	**REC8M0007131**	BASE BOMBA	PUMP BASE	O-RING
11	25-896523	**REC25-896523**	ARO TÓRICO	O-RING	PARAOLIO
12	26-888920	**REC26-888920**	RETÉN ACEITE	OIL SEAL	PARAOLIO
13	26-888921	**REC26-888921**	RETÉN ACEITE	OIL SEAL	FERMO
14	824519-1	**REC8245191**	RETENEDOR	RETAINER	CHIAVETTA
15	28-43037	**REC28-8M0032833**	CHAVETA	KEY	CUSCINETTO
16	31-42647A1	**REC387817**	COJINETE	BEARING	RONDELLA
17	12-92721	**REC350038**	ARANDELA	WASHER	DADO
18	11-35921	**REC11-35921**	TUERCA	NUT	PARAOLIO
19	26-816464-1	**REC26-8164641**	RETÉN ACEITE	OIL SEAL	RONDELLA
20	12-77674	**REC12-77674**	ARANDELA	WASHER	O-RING
21	25-896322	**REC25-3618**	ARO TÓRICO	O-RING	GUARNIZIONE
22	27-880729	**REC27-880729**	JUNTA	GASKET	VITE
23	10-806327	**REC10-806327**	TORNILLO	SCREW	ANODO ALLUMINIO
24	826134Q	**CM826134A**	ANODO ALUMINIO	ANODE ALUMINUM	ANODO
24	826134Q	**CM826134**	ANODO	ANODE	ANODO
25	76214Q5	**CM76214**	ANODO	ANODIC PLATE	ANODO ALLUMINIO
25	76214Q5	**CM76214A**	ANODO ALUMINIO	ANODIC PLATE ALUMINUM	MOLLA
26	24-30893	**REC24-30893**	MUELLE	SPRING	PERNO DI FERMO
27	17-828356	**REC17-828356**	PASADOR	DETENT PIN	CHIAVETTA
28	17-30632	**REC8M0020941**	PASADOR	CROSS PIN	PARAOLIO
29	26-888906	**REC888483**	RETÉN ACEITE	OIL SEAL	PARAOLIO
30	26-888483	**REC26-888483**	RETÉN ACEITE	OIL SEAL	O-RING
31	26-896524	**REC25-31534**	ARO TÓRICO	O-RING	DADO
32	79448	**REC8M2011027**	TUERCA	COVER NUT	PARAOLIO
33	26-830749	**REC26-830749**	RETÉN	OIL SEAL	CUSCINETTO
34	31-884330T01	REC31-884330T01	RODAMIENTO	BEARING	SUPPLEMENTI
35	15-891936A01	REC15-891936A01	SUPLEMENTOS	SHIM KIT	DISTANZIALE
36	23-891919001	**REC23-891919001**	ESPACIADOR	SPACER	KIT ASSE
37	19755T7	**REC19755T7**	EJE KIT	SHIFT SPOOL	SUPPLEMENTI
38	15-884328A01	**REC15-884328A01**	SUPLEMENTOS	SHIM KIT	CUSCINETTO
39	31-884323T01	**REC15-884323T01**	RODAMIENTO	BEARING	CLIP
40	53-8M0051043	**REC53-8M0051043**	CLIP	CLIP	RONDELLA
41	8M0053823	**REC8M0053823**	ARANDELA	WASHER	CUSCINETTO
42	31-884325T01	**REC31-884325T01**	RODAMIENTO	BEARING	SUPPLEMENTI
43	15-38657A1	**REC15-38657A1**	SUPLEMENTOS	SHIM KIT	KIT CUSCINETTO
44	15-884327A01	**REC15-884327A02**	KIT RODAMIENTOS	BEARING KIT	VITE
45	10-79953Q04	**REC10-79953Q04**	TORNILLO	BOLT	VITE

Ref.	R.O.
REC46-70941A3	46-70941A3

Kit reparacion Bomba agua
Water Pump kit
Kit riparazione Pompa acqua

Ref.	R.O.
REC47-89980T1	47-89980T1

Kit reparación Bomba agua
Water Pump kit
Kit riparazione Pompa acqua

Ref.	R.O.
REC47-89981Q1	47-89981Q1

Kit reparación Bomba agua
Water Pump kit
Kit riparazione Pompa acqua

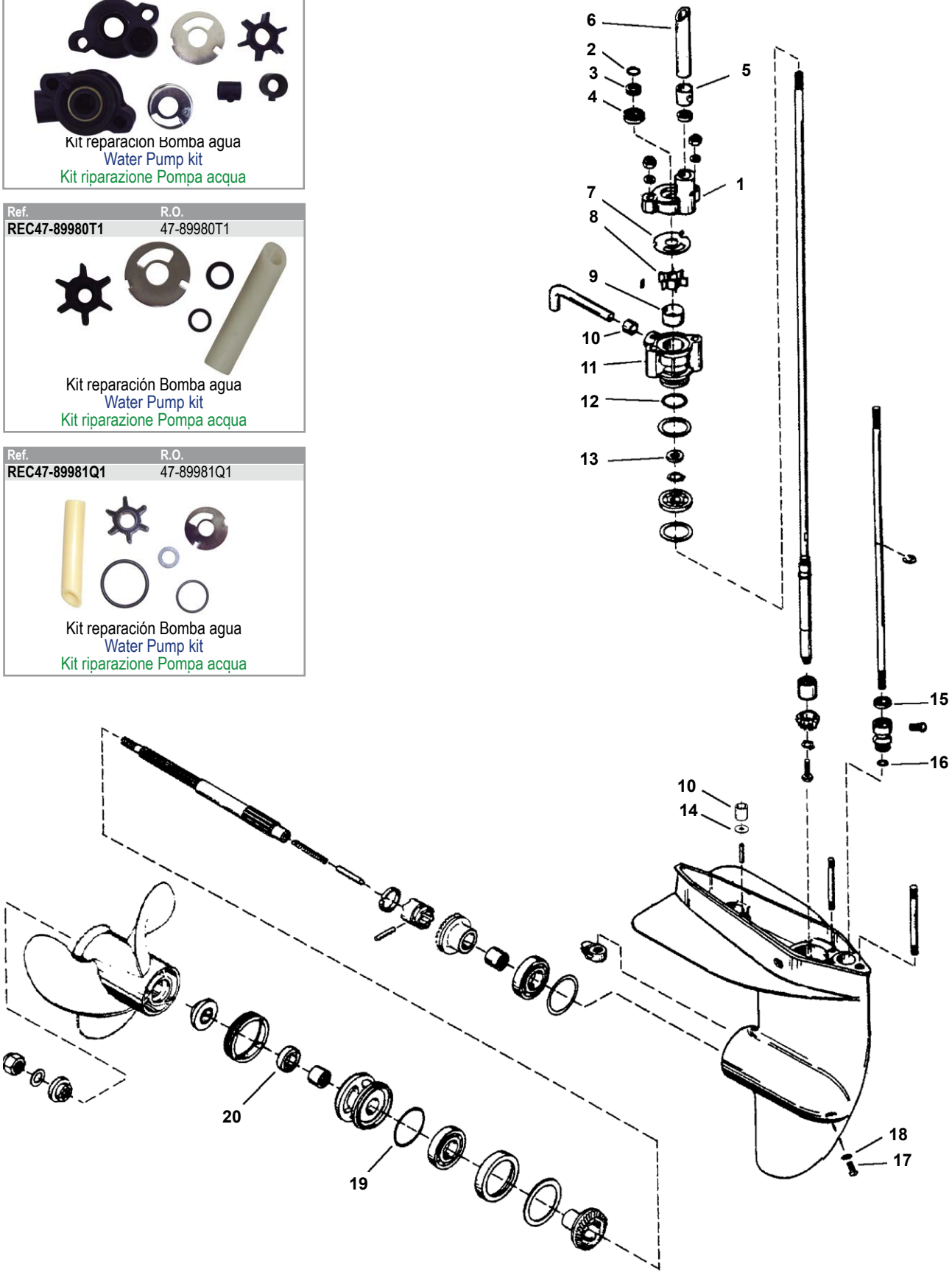

Nº	R.O./ OEM	Ref.	Descripción	Description	Descrizione
1	93224A1	**REC93224A1**	CUERPO BOMBA	PUMP HOUSING	CORPO POMPA
2	25-62704	**REC25-62704**	ARO TÓRICO	O-RING	O-RING
3	25-30526		RETÉN	SEAL	PARAOLIO
4	26-30913	**REC26-30913**	RETÉN ACEITE	OIL SEAL	PARAOLIO
5	26-36558	**REC26-36558**	GRUESO	GROMMET	SPESSORE
6	23-31792		TUBO GUÍA	GUIDE TUBE	TUBO GUIDA
7	46895	**REC46895**	TAPA BOMBA	WEAR PLATE	COPERCHIO POMPA
8	47-89980	**REC47-89980**	IMPULSOR	IMPELLER (0.438 I.D.)	GIRANTE
8	47-89981	**REC47-89981**	IMPULSOR	IMPELLER (0.456 I.D.)	GIRANTE
9	70977	**REC70977T**	TAPA BOMBA	PUMP CUP	COPERCHIO POMPA
10	26-33613	**REC26-33613**	RETÉN	SEAL	TENUTA
11	46-70941A1	**REC46-70941T01**	BASE BOMBA USAR CON IMPULSOR REC47-89981	PUMP BASE (USE WITH REC47-89981 IMPELLER)	BASE POMPA DA UTILIZZARE CON GIRANTE REC47-89981
12	25-29439	**REC309731**	ARO TÓRICO	O-RING	O-RING
13	26-30900	**REC26-30900T**	RETÉN ACEITE BASE BOMBA REC46-70941T01	OIL SEAL (FOR REC46-70941T01 PUMP BASE)	PARAOLIO BASE POMPA REC46-70941T01
13	26-96063	**REC26-897153**	RETÉN ACEITE BASE BOMBA REC46-92970A1	OIL SEAL (FOR REC46-92970A1 PUMP BASE)	PARAOLIO BASE POMPA REC46-92970A1
14	23-86215	**REC23-86215**	ESPACIADOR	SPACER	SPESSORE
15	26-30696		RETÉN ACEITE	OIL SEAL	PARAOLIO
16	25-26802	**REC303347**	ARO TÓRICO	O-RING	O-RING
17	10-79953Q2	**REC10-79953Q04**	JUEGO TORNILLO	SCREW SET	KIT VITE
18	12-20260	**REC12-191833**	JUNTA	GASKET	GUARNIZIONE
19	25-30529	**REC25-30529**	ARO TÓRICO	O-RING	O-RING
20	26-66022	**REC26-66022**	RETÉN ACEITE	OIL SEAL	PARAOLIO

Ref.	R.O.
REC26-77066A1	26-77066A1

Kit retenes cola
Gearcase seal kit
Kit tenuta piede

Ref.	R.O.
REC46-77177A3	46-77177A3

Kit reparación Bomba agua
Water Pump kit
Kit riparazione Pompa acqua

Ref.	R.O.
REC47-89983Q1	47-89983Q1

Kit reparación Bomba agua
Water Pump kit
Kit riparazione Pompa acqua

Ref.	R.O.
REC26-79831A1	26-79831A1

Kit reparación Bomba agua
Water Pump kit
Kit riparazione Pompa acqua

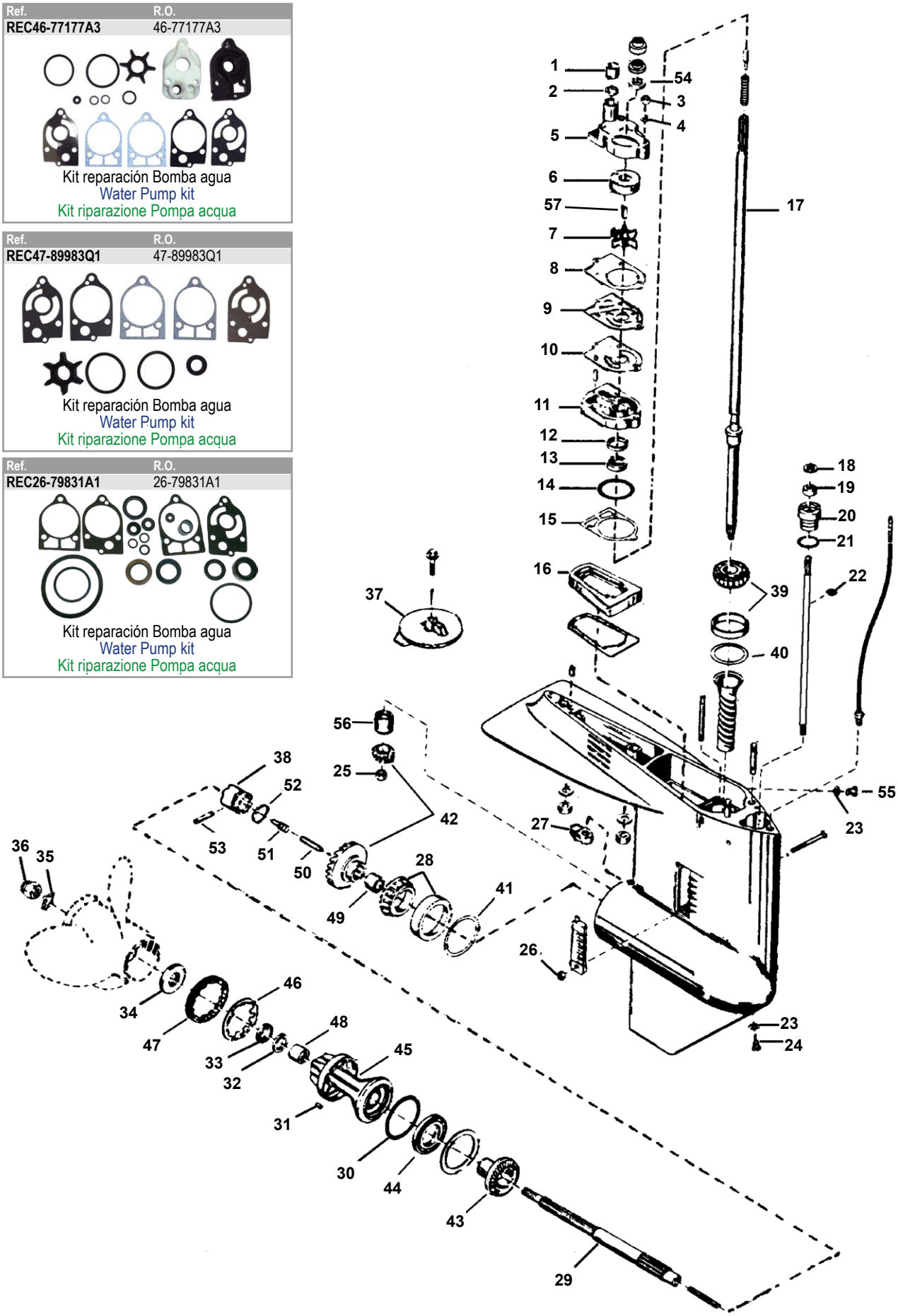

Nº	R.O./ OEM	Ref.	Descripción	Description	Descrizione
1	26-38452	**REC26-38452**	GRUESO	GROMMET	SPESSORE
2	12-38453	**REC12-38453**	JUNTA	GASKET	GUARNIZIONE
3	11-13438	**REC11-8267089**	CIERRE	LOCK NUT	CHIUSURA
4	12-29245	**REC12-29245**	ARANDELA	WASHER	RONDELLA
5	46-77822A1	**REC46-77822A1**	CUERPO BOMBA AGUA	WATER PUMP HOUSING	CORPO POMPA ACQUA
6	48753	**REC48753**	TAPA BOMBA AGUA	WATER PUMP CUP	COPERCHIO POMPA ACQUA
7	47-89983T	**REC47-89983T**	IMPULSOR	IMPELLER	GIRANTE
8	27-19551	**REC27-19551**	JUNTA	GASKET	GUARNIZIONE
9	32768	**REC32768**	TAPA BOMBA	WEAR PLATE	COPERCHIO POMPA
10	27-19553	**REC27-19553**	JUNTA	GASKET	GUARNIZIONE
11	46-77177A1	**REC46-77177A1**	BASE BOMBA AGUA	WATER PUMP BASE	BASE POMPA ACQUA
12	26-90562	**REC26-90562**	RETÉN ACEITE	OIL SEAL	PARAOLIO
13	26-79831	**REC26-79831**	RETÉN ACEITE	OIL SEAL	PARAOLIO
14	25-26722	**REC25-26722**	ARO TÓRICO	O-RING	O-RING
15	27-19552	**REC27-19552**	JUNTA	GASKET	GUARNIZIONE
16	37721	**REC3721001**	RETÉN	SEAL	TENUTA
17	45-98180	**REC45-98180**	EJE LARGO	DRIVE SHAFT (LONG)	ASSE LUNGO
18	12-77674	**REC12-77674**	JUNTA	GASKET	GUARNIZIONE
19	26-816464-1	**REC26-8164641**	RETÉN ACEITE	OIL SEAL	PARAOLIO
20	23-77631A2	**REC23-77631A2**	ACOPLE EJE	BUSHING ASSEMBLY	ACCOPPIO ASSE
21	25-25439	**REC25-25439**	ARO TÓRICO	O-RING	O-RING
22	53-29641	**REC23-29641**	ARO RETENEDOR	RETAINING RING	O-RING
23	12-19183-3	**REC12-191833**	JUNTA	GASKET	GUARNIZIONE
24	22-67892A1	**REC22-6789A05**	TORNILLO DRENAJE	DRAINING SCREW	VITE DRENAGGIO
25	11-55910	**REC313359**	TUERCA PIÑÓN	PINION NUT	DADO PIGNONE
26	11-45812	**REC11-859124**	CIERRE TUERCA	LOCK NUT	CHIUSURA DADO
27	76039-4	**REC760394**	LEVA	SHIFT CAM	LEVA
28	31-38356A1	**REC31-38356A1**	COJINETE	BEARING	CUSCINETTO
29	44-75365	**REC44-75365**	EJE HÉLICE	PROP SHAFT	ASSE ELICA
30	25-31986	**REC3852886**	ARO TÓRICO	O-RING	O-RING
31	28-30281	**REC28-30281**	CHAVETA	KEY	CHIAVETTA
32	26-69188	**REC26-69188**	RETÉN ACEITE	OIL SEAL	PARAOLIO
33	26-69189	**REC26-69189**	RETÉN ACEITE	OIL SEAL	PARAOLIO
34	73345A1	**REC73345A1**	TOPE HÉLICE	THRUST HUB	PUNTA ELICA
35	14-76281	**REC14-76281Q**	CIERRE HÉLICE	TAB WASHER	CHIUSURA ELICA
36	11-69578A1	**REC11-69578Q1**	TUERCA HÉLICE	PROP NUT	DADO ELICA
37	31640Q4	**CM31640A**	ANODO ZINC	ANODE ZINC	ANODO ZINCO
37	31640Q4	**CM31640**	ANODO ALUMINIO	ANODE ALUMINUM	ANODO ALLUMINIO
38	52-92911T		SELECTOR	CLUTCH DOG	SELETTORE
39	31-77420A1	**REC31-77420A1**	COJINETE	BEARING	CUSCINETTO
40	15-92881A1	**RM15-92881A1**	JUEGO SUPLEMENTOS	SHIM SET	KIT SUPPLEMENTI
41	15-38374A1		JUEGO SUPLEMENTOS	SHIM SET	KIT SUPPLEMENTI
42	43-803497T1		KIT PIÑONES MARCHA ADELANTE	P/FORWARD GEAR SET	KIT PIGNONI MARCIA IN AVANTI
43	43-79158T		MARCHA ATRÁS	REVERSE GEAR	MARCIA INDIETRO
44	30-20839T	**REC30-20839T**	COJINETE	BEARING	CUSCINETTO
45	69386A1	**REC69386T1**	COJINETE DIÁBOLO	BEARING CARRIER	CUSCINETTO
46	14-53012		ARANDELA	KEYED WASHER	RONDELLA
47	11-87763		TUERCA	COVER NUT	DADO
48	31-21700	**REC31-21700**	COJINETE	BEARING	CUSCINETTO
49	31-21739	**REC31-21739**	COJINETE	BEARING	CUSCINETTO
50	38441	**REC38441**	PASADOR	CAM FOLLOWER	CHIAVETTA
51	20843	**REC20843**	PASADOR	SLIDE	CHIAVETTA
52	24-38114	**REC24-38114**	MUELLE	SPRING	MOLLA
53	17-38113	**REC17-38113**	PASADOR	CROSS PIN	CHIAVETTA
54	25-20273	**REC25-20273**	PASADOR	SLINGER	CHIAVETTA]
55	10-79953Q2	**REC10-79953Q04**	JUEGO TORNILLOS	SCREW SET	KIT VITE
56	31-6291T	**REC31-62091T**	RODAMIENTO	BEARING	CUSCINETTO
57	8M0032837	**REC8M0032837**	CHAVETA	KEY	CHIAVETTA

2.0, 2.4, 2.5 / V6
L4, L6, V6 (65-225 HP)

Ref.	R.O.
REC47-89984Q5	47-89984Q5

Kit reparación Bomba agua
Water Pump kit
Kit riparazione Pompa acqua

Ref.	R.O.
REC46-96148A8	46-96148A8

Kit reparación Bomba agua
Water Pump kit
Kit riparazione Pompa acqua

Ref.	R.O.
REC26-55682A1	26-55682A1

Kit retenes cola
Gearcase seal kit
Kit tenuta piede

Ref.	R.O.
REC11-52707Q1	11-52707Q1

Kit retenes cola
Gearcase seal kit
Kit tenuta piede

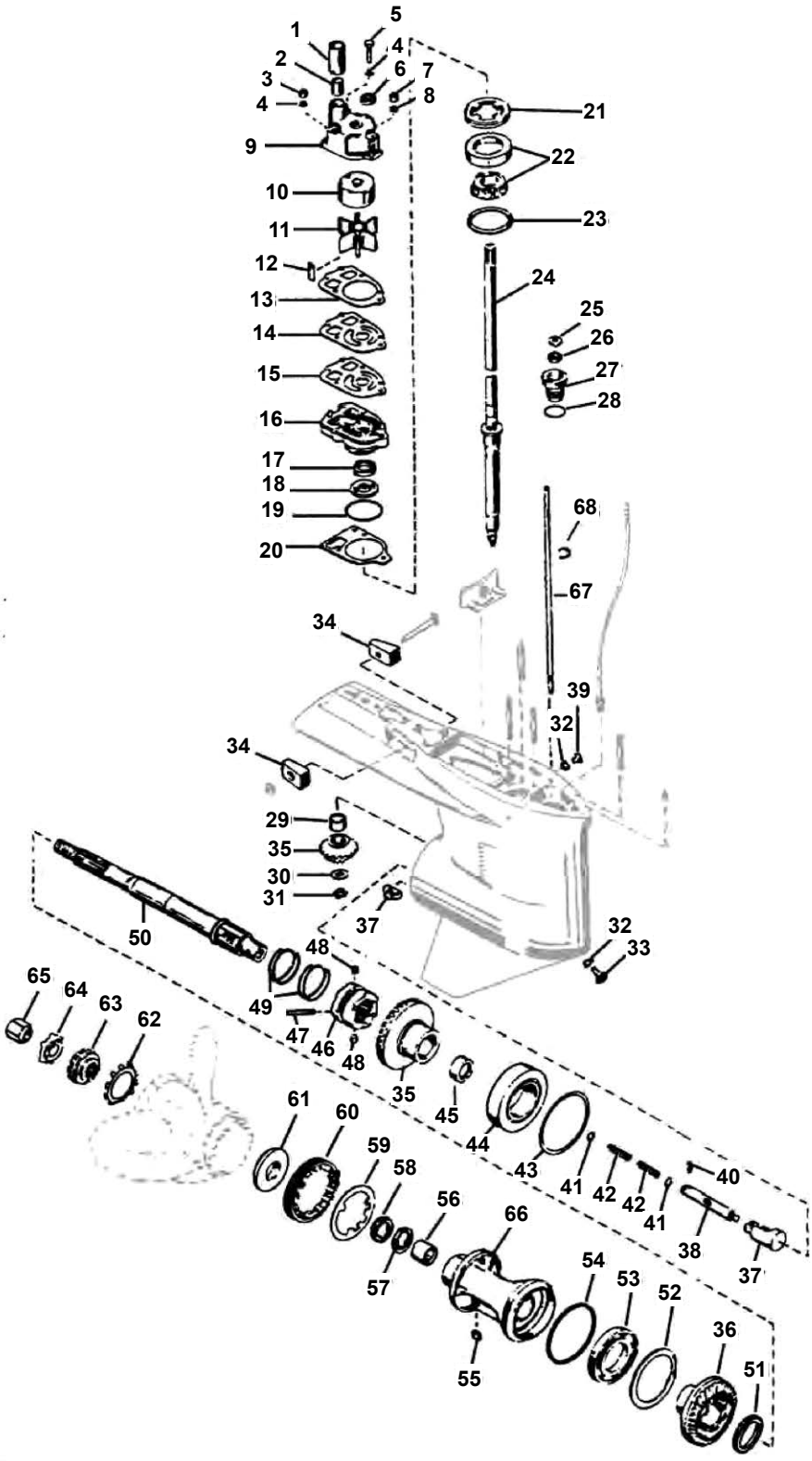

Nº	R.O./OEM	Ref.	Descripción	Description	Descrizione
1	23-29804	**REC23-29804T**	TUBO GUÍA	TUBE GUIDE	TUBO GUIDA
2	26-38970	**REC26-38970**	RETÉN	SEAL	TENUTA
3	11-13438	**REC8267119**	TUERCA	NUT	DADO
4	12-29245	**REC12-29245**	ARANDELA	WASHER	RONDELLA
5	10-96411	**REC10-96411**	TORNILLO	SCREW	VITE
6	25-30271	**REC25-30271**	PASADOR	SLINGER	CHIAVETTA
7	11-13436	**REC11-13436**	TUERCA	NUT	DADO
8	12-36001	**REC92995-08600**	ARANDELA	WASHER	RONDELLA
9	46-96148T1	**REC46-96148T1**	CUERPO BOMBA	PUMP HOUSING	CORPO POMPA
10	48752T	**REC48752T**	TAPA BOMBA	PUMP CUP	COPERCHIO POMPA
11	47-89984T4	**REC47-89984T4**	IMPULSOR	IMPELLER	GIRANTE
12	28-56654	**REC8M0032834**	CHAVETA	KEY	CHIAVETTA
13	27-858524	**REC27-858524**	JUNTA	GASKET	GUARNIZIONE

Nº	R.O./OEM	Ref.	Descripción	Description	Descrizione
14	32435	**REC324351**	CIERRE BOMBA	WEAR PLATE	CHIUSURA POMPA
15	27-85608-1	**REC27-856081**	JUNTA	GASKET	GUARNIZIONE
16	46-42579A3	**REC46-8M0077147**	BASE BOMBA	PUMP BASE	BASE POMPA
17	26-16977	**REC26-16977**	RETÉN ACEITE	OIL SEAL	PARAOLIO
18	26-89238	**REC26-89238**	RETÉN ACEITE	OIL SEAL	PARAOLIO
19	25-90011	**REC25-90011**	ARO TÓRICO	O-RING	O-RING
20	27-42631-1	**REC27-426311**	JUNTA	GASKET	GUARNIZIONE
21	824519-1	**REC8245191**	RETENDOR	RETAINER	RITENETORE
22	31-36387A1	**REC31-36387A1**	COJINETE	BEARING	CUSCINETTO
22	31-63079A1	**REC31-53079A1**	COJINETE PARA EJE 11163	BEARING	CUSCINETTO
22	31-69220T		COJINETE PARA EJE 11162	BEARING	CUSCINETTO
23	15-42637A1	**REC8M0063267**	KIT SUPLEMENTOS	SHIM SET	KIT SUPPLEMENTI
24	45-44000-1		EJE COLA 20" MODELOS V	DRIVE SHAFT 20" V MODELS	ASSE PIEDE 20" V MODELLO
24	45-42646		EJE COLA	DRIVE SHAFT	ASSE PIEDE
24	45-98682A1		EJE TRANSMISIÓN	DRIVE	ASSE TRASMISIONE
25	12-77674	**REC12-77674**	JUNTA	GASKET	GUARNIZIONE
26	26-816464-1	**REC26-8164641**	RETÉN ACEITE	OIL SEAL	PARAOLIO
27	23-77631A2	**REC23-77631A2**	CASQUILLO	BUSHING	GHIERA
28	25-25439	**REC25-25439**	ARO TÓRICO	O-RING	O-RING
29	31-42647A1	**REC387817**	COJINETE MODELOS V6	BEARING V6 MODELS	CUSCINETTO MODELLO V6
29	31-32898T	**REC31-32898T**	COJINETE MODELOS EN LÍNEA	BEARING INLINE MODELS	CUSCINETTO MODELLO IN LINIA
30	12-92721	**REC350038**	ARANDELA	WASHER	RONDELLA
31	11-35921	**REC11-35921**	TORNILLO	NUT	VITE
32	12-19183-3	**REC12-19183-3**	JUNTA	GASKET	GUARNIZIONE
33	22-67892A1	**REC22-67892A5**	TORNILLO DRENAJE	DRAINING SCREW	VITE DRENAGGIO
34	826134Q	**CM826134**	ANODO ZINC	ANODE ZINC	ANODO ZINCO
34	826134Q	**CM526134A**	ANODO ALUMINIO	ANODE ALUMINUM	ANODO ALLUMINIO
35	43-68548T3		PIÑÓN ATAQUE	PINION GEAR (STRAIGHT)	ATTACCO PIGNONE
35	43-68447T1		MARCHA AVANTE RECTO	FORWARD GEAR (STRAIGHT)	MARCIA IN AVANTI RETTO
35	43-44102A7 43-803619T1		MARCHA AVANTE 2.00:1	P/FORWARD GEAR (2.00:1)	MARCIA IN AVANTI (2.00:1)
35	43-44104A8 43-803615T2		MARCHA AVANTE 1.87:1	P/FORWARD GEAR (1.87:1)	MARCIA IN AVANTI (1.87:1)
35	43-859321A3	**REC43-859321A3**	MARCHA AVANTE 1.75:1	P/FORWARD GEAR (1.75:1)	MARCIA IN AVANTI (1.75:1)
36	43-76250T		MARCHA ATRÁS RECTO 2.0:1	REVERSE GEAR (STRAIGHT) 2.0:1	MARCIA INDIETRO RETTO 2.0:1
36	43-824987A2		MARCHA ATRÁS 2:1	REVERSE GEAR 2:1	MARCIA INDIETRO 2:1
36	43-85462T		MARCHA ATRÁS. PIN	REVERSE GEAR. PIN	MARCIA INDIETRO. PIN
36	43-824986A2		MARCHA ATRÁS 1.87:1	REVERSE GEAR 1.87:1	MARCIA INDIETRO 1.87:1
36	43-828175A1		MARCHA ATRÁS 1.87:1 NO CARRACA	REVERSE GEAR 1.87:1 NOT RATCHETING	MARCIA INDIETRO 1.87:1 SENZA SPINOTTO
36	43-859322A1		MARCHA ATRÁS 1.78:1	REVERSE GEAR 1.75:1	MARCIA INDIETRO 1.75:1
37	89594A1	**REC89594A1**	KIT PASADORES	CAM FOLLOWER KIT	KIT CHIAVETTA
38	79911A1		KIT BARRAS CON PASADOR	ROD KIT RATCHETING VERSION	KIT SBARRE CON SPINOTTO
38	828827	**REC828287**	BARRA SIN PASADOR	ROD NON-RATCHETING VERSION	SBARRA SENZA SPINOTTO
39	10-79953Q2	**REC10-79953Q4**	KIT TORNILLOS	SCREW SET	KIT VITI
40	17-78906	**REC17-78906**	PASADOR	PIN	CHIAVETTA
41	12-78910	**REC12-78910**	ARANDELA	WASHER	RONDELLA
42	24-79910	**REC24-79910**	MUELLE	SPRING	MOLLA
43	15-47397A1	**REC15-47397A1**	KIT SUPLEMENTOS	SHIM SET	KIT SUPPLEMENTI
44	31-30894A1	**REC31-3089A1**	COJINETE MODELOS EN LÍNEA	BEARING INLINE MODELS	CUSCINETTO MODELLO IN LINIA
44	31-78172A1	**REC31-78172A1**	COJINETE MODELOS V 3.543"	BEARING V-MODELS 3.543"	CUSCINETTO MODELLO V 3.543"
45	31-54928-1	**REC382343**	COJINETE MODELOS V	BEARING V-MODELS	CUSCIENTTO MODELLO V
45	31-30895T	**REC31-30895T**	COJINETE MODELOS EN LÍNEA	BEARING INLINE MODELS	CUSCINETTO MODELLO IN LINIA
46	52-853594T	**REC52-853594T**	SELECTOR	CLUTCH DOG	SELETTORE
46	52-822539T	**REC52-822539T**	SELECTOR MODELOS EN LÍNEA	CLUTCH DOG INLINE MODELS	SELETTORE MODELLO IN LINIA
46	52-823174T		SELECTOR MODELOS V CON PASADOR	CLUTCH DOG V-MODELS RACHETING	SELETTORE MODELLO V CON SPINOTTO
46	52-859340T	**REC52-859340T**	SELECTOR MODELOS V SIN PASADOR	CLUTCH DOG V-MODELS NON-RACHETING	SELETTORE MODELLO V SENZA SPINOTTO
47	17-30632	**REC8M0020941**	PASADOR MODELOS EN LÍNEA	CROSS PIN INLINE MODELS	CHIAVETTA MODELLO IN LINIA
47	17-78905	**REC8M0084243**	PASADOR MODELOS V	CROSS PIN V-MODELS	CHIAVETTAMODELLO V
48	17-78909		PASADOR (VERSIÓN 1 PIN)	DETENT PIN (SINGLE PIN VERSION)	CHIAVETTA(1 SPINOTTO)
48	17-828356	**REC17-828356**	PASADOR (VERSIÓN 2 PINES)	DETENT PIN (DOUBLE PIN VERSION)	CHIAVETTA (2 SPINOTTI)
49	24-30893	**REC24-30893**	MUELLE (VERSIÓN SIMPLE)	SPRING (SINGLE VERSION)	MOLLA (VERSIONE SIMPLE)
49	24-78962	**REC24-78962**	MUELLE (VERSIÓN DOBLE)	SPRING (DOUBLE VERSION)	MOLLA (VERSIONE DOPPIA)
50	44-94148	**REC44-94148**	EJE HÉLICE (V6)	PROP SHAFT (V6)	ASSE ELICA (V6)
50	44-93003		EJE HÉLICE (6 EN LÍNEA)	PROP SHAFT (6 IN LINE)	ASSE ELICA (6 IN LINIA)
51	23-824108	**REC23-824108**	ESPACIADOR	THRUST SPACER	DISTANZIALE
52	68100-1	**REC681001**	ARO	THRUST RING	O-RING
53	30-88957T	**REC30-88957T**	COJINETE	BEARING	CUSCINETTO
54	25-896524	**REC25-31534**	ARO TÓRICO	O-RING	O-RING
55	28-30281	**REC28-30281**	CHAVETA	KEY	CHIAVETTA
56	31-30956T	**REC387247**	COJINETE	BEARING	CUSCINETTO
57	26-76868	**REC26-76868**	RETÉN ACEITE	OIL SEAL	PARAOLIO
58	26-12224	**REC26-12224**	RETÉN ACEITE	OIL SEAL	PARAOLIO
59	14-79447	**REC14-79447**	ARANDELA CIERRE	KEYED WASHER	RONDELLA CHIUSURA
60	79448	**REC8M2011027**	TOPE TUERCA	COVER NUT	PUNTA DADO
61	12-835467-1	**REC12-31215001**	TOPE HÉLICE	THRUST HUB	PUNTA ELICA
62	13-42351-1	**REC13-42351**	CIERRE HÉLICE	LOCKWASHER	CHIUSURA ELICA
63	12-31211A3	**REC12-31211005**	RECIBIDOR	RECEIVER	RICEVITORE
64	14-816629Q	**REC14-816629Q**	ARANDELA	TAB WASHER	RONDELLA
65	11-827614	**REC52707Q1**	TUERCA	LOCK NUT	DADO
66	43567T1	**REC434391**	COJINETE DIÁBOLO	BEARING CARRIER	CUSCINETTO
67	76062A1	**GLM21150**	EJE CAMBIO LARGO	SHIFT SHAFT (LONG)	ASSE CAMBIO LUNGO
68	53-29641	**REC53-29641**	ARO RETENEDOR	RETAINING RING	O-RING

3.0L: 225 CARB / 225, 250 EFI, DFI

Ref.	R.O.
REC817275A6	817275A6

Kit reparación Bomba agua
Water Pump kit
Kit riparazione Pompa acqua

Ref.	R.O.
REC47-43026Q06	47-43026Q06

Kit reparación Bomba agua
Water Pump kit
Kit riparazione Pompa acqua

Ref.	R.O.
REC26-816575A5	26-816575A5

Kit retenes cola
Gearcase seal kit
Kit tenuta piede

Ref.	R.O.
REC26-816575A4	26-816575A4

Kit retenes cola
Gearcase seal kit
Kit tenuta piede

Ref.	R.O.
REC11-52707Q1	11-52707Q1

Kit cierre hélice
Prop nut kit
Kit chiusura elica

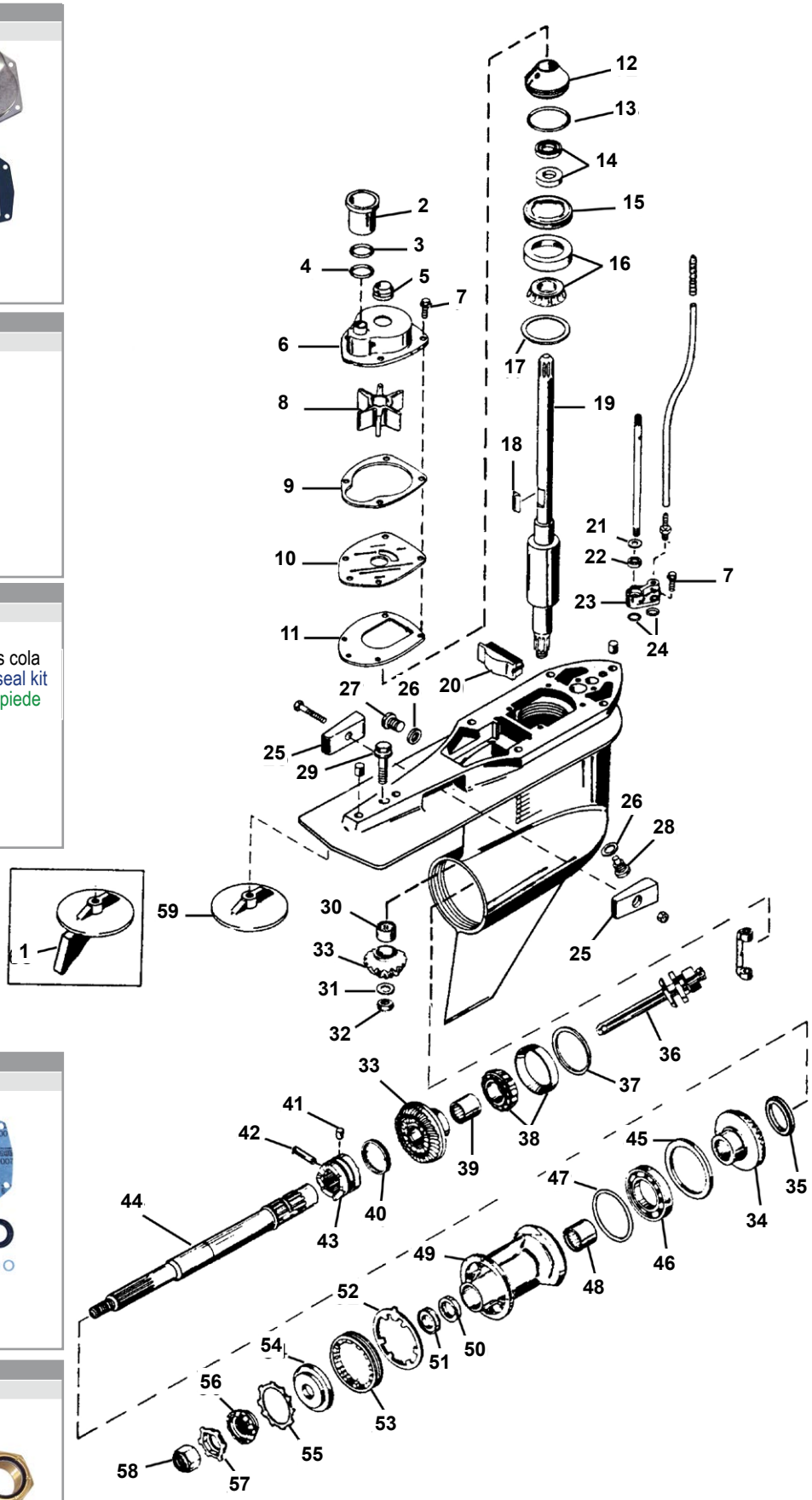

Nº	R.O./OEM	Ref.	Descripción	Description	Descrizione
2	832942A1	**REC832942A1**	TUBO AGUA	COUPLING ASSY.	TUBO ACQUA
3	25-35027	**REC25-35027**	ARO TORICO	O-RING	O-RING
4	25-21836	**REC25-21836**	ARO TORICO	O-RING	O-RING
5	26-816575A2	**REC26-816575A2**	RETEN GOMA	FACE SEAL	TENUTA GOMMA
6	817275A1	**RM817275A1**	TAPA BOMBA	WATER PUMP ASSY.	COPERCHIO POMPA
7	10-19937-16	**REC10-816928**	TORNILLO	SCREW	VITE
8	47-43026T2	**REC47-43026Q02**	IMPULSOR	IMPELLER	GIRANTE
9	27-817277-1	**REC27-8172771**	JUNTA	GASKET	GUARNIZIONE
10	817276-1	**REC8172761**	TAPA BOMBA	WEAR PLATE	COPERCHIO POMPA
11	27-43033-1	**REC27-430331**	JUNTA	GASKET	GUARNIZIONE
12	807929A1	**REC807929A1**	BASE BOMBA	CARRIER ASSY.	BASE POMPA
13	25-90011	**REC25-90011**	ARO TORICO	O-RING	O-RING
14	26-66302	**REC26-66302**	RETEN	OIL SEAL	PARAOLIO
15	824519-1	**REC8245191**	RETENEDOR	RETAINER	RITENETORE
16	31-36387A1	**REC31-36387A1**	COJINETE	BEARING	CUSCINETTO
17	15-42637A1	**REC830063261**	SUPLEMENTO	SHIM	SPESSORE
18	28-43037	**REC8M0032833**	CHAVETA	KEY	CHIAVETTA
19	45-816472	**REC45-816919**	EJE TRANMISION	DRIVE SHAFT	ASSE TRASMISSIONE
20	821526	**REC821526001**	TAPÓN SEPARADOR	FILLER BLOCK	TAPPO
21	12-77674	**REC12-77674**	JUNTA	GASKET	GUARNIZIONE
22	26-816464-1	**REC26-8164641**	RETEN	OIL SEAL	PARAOLIO
23	23-815921A4	**REC23-815921A21**	CUERPO VARILLA	SHIFT BUSHING	CORPO ASTICELLA
24	25-36318	**REC25-36318**	ARO TORICO	O-RING	O-RING
25	826134Q	**CM826134**	ANODO ZINC	ANODE ZINC	ANODO ZINCO
25	826134Q	**CM826134A**	ANODO ALUMINIO	ANODE ALUMINUM	ANODO ALLUMINIO
26	12-19183-2	**REC12-19183**	JUNTA	GASKET	GUARNIZIONE
27	10-79953Q2	**REC10-79953Q04**	TORNILLO	SCREW SET	VITE
28	22-67892A1	**REC22-67892A05**	TORNILLO DRENAJE	DRAINING SCREW	VITE DRENAGGIO
29	10-806327	**REC10-806327**	TORNILLO	SCREW	VITE
30	31-42647A1	**REC387817**	COJINETE	BEARING	CUSCINETTO
31	12-92721	**REC350038**	ARANDELA	WASHER	RONDELLA
32	11-35921	**REC1-35921**	TUERCA	NUT	DADO
33	43-859321A3	**REC43-859321A3**	KIT PIÑONES ATAQUE (1.75:1)	P/FORWARD GEAR (1.75:1)	KIT PIGNONI AVANTI (1.75:1)
33	43-828072A2	**REC43-878087A4**	KIT PIÑONES ATAQUE (1.62:1)	P/FORWARD GEAR (1.62:1)	KIT PIGNONI AVANTI (1.62:1)
34	43-859322A1	**REC43-859322A1**	KIT PIÑONES M. ATRÁS (1.75:1)	REVERSE GEAR (1.75:1)	KIT PIGNONI INDIETRO (1.75:1)
34	43-828073A1	**REC43-828073A1**	KIT PIÑONES M. ATRÁS (1.62:1)	REVERSE GEAR (1.62:1)	KIT PIGNONI INDIETRO (1.62:1)
35	23-824108	**REC23-824108**	ESPACIADOR	THRUST SPACER	DISTANZIAELE
36	818349T1	**REC818349T1**	EJE CAMBIO	SHIFT SPOOL	ASSE CAMBIO
37	15-47397A1	**REC15-47397A1**	SUPLEMENTO	SHIM (3.500 O.D.)	SPESSORE
37	15-44491A1	**REC15-44491A1**	SUPLEMENTO	SHIM (3.265 O.S.)	SPESSORE
38	31-35928A1/T1	**REC31-35928T1**	COJINETE	BEARING (1.875 I.D./3.500 O.D.)	CUSCINETTO
38	31-828439A2	**REC31-828439A2**	COJINETE	BEARING (1.875 I.D./3.265 O.D.)	CUSCINETTO
38	31-30894A1	**REC31-30894A1**	COJINETE	BEARING (1.750 I.D./3.265 O.D.)	CUSCINETTO
39	31-30895T	**REC31-30895T**	COJINETE	BEARING	CUSCINETTO
40	24-30893	**REC24-30893**	MUELLE	SPRING	MOLLA
41	17-828356	**REC17-828356**	TAPA PASADOR	DETENT PIN	CHIAVETTA
42	17-30632	**REC8M0020999**	PASADOR	CROSS PIN	CHIAVETTA
43	52-853594T	**REC52-853594T**	SELECTOR	CLUTCH DOG	SELETTORE
43	52-859340T	**REC52-859340T**	SELECTOR (NO ESTILO CARRACA)	CLUTCH DOG (NOT RATCHETING STYLE)	SELETTORE (NON SPINOTTO)
44	44-824110	**REC44-824110**	EJE HÉLICE	PROP SHAFT	ASSE ELICA
45	68100-1	**REC681001**	ARO	THRUST RING	O-RING
46	30-88957T	**REC30-88957T**	COJINETE	BEARING	CUSCINETTO
47	25-31534	**REC25-1534**	ARO TÓRICO	O-RING	O-RING
48	30-30956	**REC387247**	COJINETE	BEARING	CUSCINETTO
49	818763A11/T11	**REC818763A10**	COJINETE COLA	BEARING CARRIER	CUSCINETTO PIEDE
50	26-14077, 26-76868	**REC26-76868**	RETÉN	OIL SEAL	PARAOLIO
51	26-12224	**REC26-12224**	RETÉN	OIL SEAL	PARAOLIO
52	14-18323	**REC14-18328**	ARANDELA	TAB WASHER	RONDELLA
53	79448	**REC8M2011027**	TUERCA CIERRE	COVER NUT	DADO CHIUSURA
54	12-835467	**REC12-31211Q01**	TOPE HÉLICE	THRUST WASHER	PUNTA ELICA
55	13-42351-1	**REC13-423511**	CIERRE	LOCKWASHER	CHIUSURA
56	12-31211A3	**REC12-3121Q3**	TOPE CIERRE	TAB WASHER RECEIVER	PUNTA CHIUSURA
57	14-816629	**REC90508-ZW1-003**	CIERRE HELICE	TAB WASHER	CHIUSURA ELICA
58	11-827614Q	**REC11-52707Q1**	TUERCA CIERRE	LOCK NUT	DADO CHIUSURA
59	76214Q5	**CM76214A**	ANODO	ANODE	ANODO
59	76214Q5	**CM76214A**	ANODOALUMINIO	ANODE ALUMINUM	ANODO ALLUMINIO
60	31640Q4	**CM31640**	ANODO	ANODE	ANODO
60	31640Q4	**CM31640A**	ANODO ALUMINIO	ANODE ALUMINUM	ANODO ALLUMINIO
61	824145	**REC824145**	EJE CAMBIO	SHIFT SHAFT	ASSE CAMBIO

KITS PIÑONES
GEAR SETS
KITS PIGNONI

MODELO MODEL MODELLO	SERIE SERIAL SERIE	REDUCCIÓN RATIO RIDUZIONE	DIENTES JAW DENTI	KIT COMPLETO COMPLETE GEAR SET KIT COMPLETO		KIT PIÑONES ATAQUE PINION & FORWARD GEAR SET KIT PIGNONE ATTACCO		PIÑONES ATAQUE PINION FORWARD PIGNONE ATTACCO		PIÑONES MARCHA ATRÁS REVERSE GEAR PIGNONE MARCIA INDIETRA	
				REF	R.O. OEM	REF	R.O. OEM	REF	R.O. OEM	REF	R.O. OEM
40 - 50 HP (3 Cyl.)	9973100 +	1.83:1 (12:22)				**REC43-803498T1**	43-803498T1			**REC43-822163T1**	43-8822163T1
50 HP (3 Cyl.)	9683055 - 9973099	1.64:1 (14:23)				**REC43-803499T1**	43-803499T1			**REC43-813695T**	43-813695T
55 HP (3 Cyl.)	9741042 +										
60 HP (3 Cyl.)	9683055 +										
60 HP (3 Cyl.) 0.85 L	9683055-997099	2.3 (13:30)	3	**REC11550 (REC43-803500T1 + REC43-12635T)**		**REC43-803500T1**	43-803500T1			**REC4312635T**	43-12635T
70 - 80 HP (3 Cyl.) 1.40 L	9483121 - 9589038										
70 - 90 HP (3 Cyl.) 1.40 L	9483121 +										
I4 100, 115, 125 HP High Altitude	9523034 +										
60 HP (3 Cyl.) 0.85 L	9683055-997099	2.3 (13:30)	6	**REC11555 (REC43-803501T2 + REC43-850034T)**		**REC43-803501T2**	43-803501T1			**REC43-850034T**	43-850034T
70 - 80 HP (3 Cyl.) 1.40 L	9483121 - 9589038										
70 - 90 HP (3 Cyl.) 1.40 L	9483121 +										
I4 100, 115, 125 HP High Altitude	9523034 +										
L4 100 HP (1.85 L)	9523034 +	2.07:1 (14:29) Selector / Cluth / Selettore **REC52-822539T**	6	**REC11556 (REC43-803037T1 + REC43-19671T)**		**REC43-803037T1**	43-803037T1			**REC43-19671T** (3 Dientes / Jaw / Denti)	43-19671T
L4 115 HP (1.85L)	9559771 +										
L4 125 HP (1.85L)	9793577 +										
L4 100 HP (1.85L)	9523034 +	2.07:1 (14:29) Selector / Cluth / Selettore **REC52-850048T**	6	**REC11557 (REC43-881260A5 + REC43-850036T)**		REC43-881260A5	43-803028T1 43-881260A5			**REC43-850036T**	43-850036T
L4 115 HP (1.85L) 115 EFI (1.75L) 115 Optimax (1.50L)	955971 +										
L4 125 HP (1.85L) Classic	9793577+										
L6 90 HP (1978-86)	484531 +	2.0:1 (14:28)		**REC11330 (REC43-86548T3 + REC43-68447T1 + REC43-76250T)**				**REC43-86548T3**	43-68548T3	**REC43-76250T**	43-76250T
L6 115 HP (1978-89)	4855153 +										
L6 140 HP (1978-81)	4865678 +							**REC43-68447T1**	43-68447T1		
L6 150 HP (1973-78)	3502806 +										
V6 135 HP (1986-98)	OA904646 - OG437999	2.0:1 (14:28)		**REC11660 (REC43-44102A7 + REC43-824987A2)**	43-44102A2	**REC43-44102A7**	43-44102A7			**REC43-824987A2**	43-824987A2
V6 150 HP (XR6, MAG III) 150 EFI (1996+)	OG438000+	1.87:1 (15:28)				**REC43-803615T2**	43-803615T2			(6 Dientes / Jaw / Denti)	43-828175A1
V6 150 DFI (1998+)	OG590000+										
175, 175 EFI (1996-98)	OG438000+										
V6 200, 225 (3.0 L DFI) (1998+)	OG590000+	1.75:1 (12:21)				**REC43-859321A3**	43-859321A3			**REC43-8859322A1** (6 Dientes / Jaw / Denti)	43-8859322A1
V6 225, 250 (3.0 L EFI) (1995+)	OG129222+										
V6 225 Seapro (3.0 L Carb) (1994-98)	OG245605 - OG437999	1.62:1 (13:21)				**REC43-878087A2**	43-878087A2			**REC43-828073A1** (6 Dientes / Jaw / Denti)	43-828073A1
V6 225 (3.0 L Carb) (1994-98)	OD280813+										
V6 150 HP (1985)	6616991 - OA904645	2.0 (14:28)		**REC11770 (REC43-803619T1 + REC43-85462T)**		**REC43-803619T1**	43-803619T1			**REC43-85462T** (6 Dientes / Jaw / Denti)	43-85462T
V6 175 HP (1980-81)	5393737 - 668750										
V6 200 HP (1980-81)	5393737 - 607319										
V6 150 HP (XR4, MAG III) 150 EFI (1993-98)	OD082000 - OG437999	1.87:1 (15:28)		**REC43-44104T2 (REC43-44104A8 + REC43-824986A2)**	43-44104T2	**RE43-44104A8**	43-44104A8			**REC43-824986A2** (6 Dientes / Jaw / Denti)	43-824986A2
V6 175, 175 EFI (1985-98)	661875 - OG437999										
V6 200, 200 EFI (1985-98)	6625221 - OG437999										
V6 220 HP (1987-88)	B117319 +										
V6 225 HP	06437999	1.62 (13:21)		**REC43-828072A6 (REC43-878087A4 + REC43-828073A1)**	43-828072A2	**REC43-878087A4**	43-828072A2			**REC43-828073A** (Sólo espaciador / spacer only / solo spessore **REC23-824108**)	43-828073A1
V6- 3.0 L Carb											
V6 225 Marathon											
V6 225 Seapro											

GUÍA PIÑONES
PINIONS APPLICATION
GUIDA PIGNONE

HP	Cyl.	AÑO YEAR ANNO	PAÍS COUNTRY PAESE	SERIE SERIAL SERIE	KIT COMPLETO COMPLET GEAR SET KIT COMPLETO	PIÑÓN ATAQUE FORWARD & PINION PIGNONE AVVANTI	MARCHA ATRÁS REVERSE GEAR MARCIA INDIETRA	MARCHA ADELANTE FORWARD BEARING MARCIA AVVANTI
40	4	1989+	USA	0C159200 +				REC31-38356A1
40	4	1989+	BEL	9570790 +				REC31-38356A1
45	4	1986	USA	5531630 +				REC31-38356A1
45	4	1986	AUS	8063985 +				REC31-38356A1
45	4	1986	BEL	9248006 +				REC31-38356A1
45	4	1986	CAN	7143688 +				REC31-38356A1
50	4	1980-85	USA	5531630 +				REC31-38356A1
50	4	1980-85	AUS	8063985 +				REC31-38356A1
50	4	1980-85	BEL	9248006 +				REC31-38356A1
50	4	1980-85	CAN	7143688 +				REC31-38356A1
40	3	1997-98	USA	0G531301 +		REC43-803498T1	REC43-822163T1	REC31-66668A1
40	3	1997-98	BEL	9973100 +		REC43-803498T1	REC43-822163T1	REC31-66668A1
50	3	1991-95	USA	0D000750 - 0G589999		REC43-803499T1		REC983892
50	3	1991-95	BEL	9683055 - 9973099		REC43-803499T1		REC983892
50	3	1998	USA	0G590000 +		REC43-803498T1	REC43-822163T1	REC31-66668A1
50	3	1998	BEL	9973100 +		REC43-803498T1	REC43-822163T1	REC31-66668A1
55	3	1996	USA	0D000750 +		REC43-803499T1		REC983892
55	3	1996	BEL	9741042 +		REC43-803499T1		REC983892
60 Standard, Non-Bigfoot	3	1991-95	USA	0D000750 +		REC43-803499T1		REC983892
60 Standard, Non-Bigfoot	3	1991-95	BEL	9683055 +		REC43-803499T1		REC983892
60 3 Jaw Rev. Clutch Bigfoot	3	1991-95	USA	0D000750 - 0G589999				REC31-30894A1
60 3 Jaw Rev. Clutch Bigfoot	3	1991-95	BEL	9683055-9973099				REC31-30894A1
60 6 Jaw Rev. Clutch Bigfoot	3	1991-95	USA	0D000750 - 0G589999				REC31-30894A1
60 6 Jaw Rev. Clutch Bigfoot	3	1991-95	BEL	9683055 - 9973099				REC31-30894A1
60 6 Jaw Rev. Clutch Bigfoot	3	1998	USA	590000 +				REC31-30894A1
60 6 Jaw Rev. Clutch Bigfoot	3	1998	BEL	9973100 +				REC31-30894A1
70 3 Jaw Rev. Clutch	3	1987	USA	0A996142 - 0C221999				REC31-30894A1
70 3 Jaw Rev. Clutch	3	1987	BEL	9483121 - 9589038				REC31-30894A1
70 6 Jaw Rev. Clutch	3	1987	USA	0A996142 - 0C221999				REC31-30894A1
70 6 Jaw Rev. Clutch	3	1987	BEL	9483121 - 9589038				REC31-30894A1
75 3 Jaw Rev. Clutch	3	1990-93	USA	0A996142 +				REC31-30894A1
75 3 Jaw Rev. Clutch	3	1990-93	BEL	9483121 +				REC31-30894A1
75 6 Jaw Rev. Clutch	3	1994-98	USA	0A996142 +				REC31-30894A1
75 6 Jaw Rev. Clutch	3	1994-98	BEL	9483121 +				REC31-30894A1
80 3 Jaw Rev. Clutch	3	1987	USA	0A996142 - 0C221999				REC31-30894A1
80 3 Jaw Rev. Clutch	3	1987	BEL	9483121 - 9589038				REC31-30894A1
80 6 Jaw Rev. Clutch	3	1987	USA	0A996142 - 0C221999				REC31-30894A1
80 6 Jaw Rev. Clutch	3	1987	BEL	9483121 - 9589038				REC31-30894A1
90 3 Jaw Rev. Clutch	3	1987	USA	0A996142 +				REC31-30894A1
90 3 Jaw Rev. Clutch	3	1987	BEL	9483121 +				REC31-30894A1
90 6 Jaw Rev. Clutch	3	1987	USA	0A996142 +				REC31-30894A1
90 6 Jaw Rev. Clutch	3	1987	BEL	9483121 +				REC31-30894A1
100 3 Jaw Rev. Clutch	4	1988-93	USA	0B209468 +				REC31-30894A1
100 3 Jaw Rev. Clutch	4	1988-93	BEL	9523034 +				REC31-30894A1
100 High Altitude 3 Jaw Rev. Clutch		1988-93	USA	0B209468 +				REC31-30894A1
100 High Altitude 3 Jaw Rev. Clutch		1988-93	BEL	9523034 +				REC31-30894A1
100 6 Jaw Rev. Clutch	4	1988-98	USA	0B209468 +	REC11557			REC31-30894A1
100 6 Jaw Rev. Clutch	4	1988-98	BEL	9523034 +	REC11557			REC31-30894A1
100 High Altitude 6 Jaw Rev. Clutch		1988-93	USA	0B209468 +				REC31-30894A1
100 High Altitude 6 Jaw Rev. Clutch		1988-93	BEL	9523034 +				REC31-30894A1
115 3 Jaw Rev. Clutch	4	1988-93	USA	0C100000 +				REC31-30894A1
115 3 Jaw Rev. Clutch	4	1988-93	BEL	9559771 +				REC31-30894A1
115 High Altitude 3 Jaw Rev. Clutch		1989-93	USA	0C100000 +				REC31-30894A1
115 High Altitude 3 Jaw Rev. Clutch		1989-93	BEL	9559771 +				REC31-30894A1
115 6 Jaw Rev. Clutch	4	1989-93	USA	0C100000 +	REC11557			REC31-30894A1
115 6 Jaw Rev. Clutch	4	1989-93	BEL	9559771 +	REC11557			REC31-30894A1
115 High Altitude 6 Jaw Rev. Clutch		1989-93	USA	0C100000 +				REC31-30894A1
115 High Altitude 6 Jaw Rev. Clutch		1989-93	BEL	9559771 +				REC31-30894A1
125 3 Jaw Rev. Clutch	4	1994-98	USA	0D283222 +				REC31-30894A1
125 3 Jaw Rev. Clutch	4	1994-98	BEL	9793577 +				REC31-30894A1
125 High Altitude 3 Jaw Rev. Clutch		1994-98	USA	0D283222 +				REC31-30894A1
125 High Altitude 3 Jaw Rev. Clutch		1994-98	BEL	9793577 +				REC31-30894A1
125 6 Jaw Rev. Clutch	4	1994-98	USA	0D283222 +	REC11557			REC31-30894A1
125 6 Jaw Rev. Clutch	4	1994-98	BEL	9793577 +	REC11557			REC31-30894A1
125 High Altitude 6 Jaw Rev. Clutch		1994-98	USA	0D283222 +				REC31-30894A1
125 High Altitude 6 Jaw Rev. Clutch		1994-98	BEL	9793577 +				REC31-30894A1

RECAMBIOS MARINOS S.L.

HP	Cyl.	AÑO YEAR ANNO	PAÍS COUNTRY PAESE	SERIE SERIAL SERIE	KIT COMPLETO COMPLET GEAR SET KIT COMPLETO	PIÑÓN ATAQUE FORWARD & PINION PIGNONE AVVANTI	MARCHA ATRÁS REVERSE GEAR MARCIA INDIETRA	MARCHA ADELANTE FORWARD BEARING MARCIA AVVANTI
V-135 Std. Rotation, 2:1 Ratio,		1986-88	USA	0A904646 - 0G437999				REC31-78172A1
V-135 Counter Rotation,		1989-90	USA	0C100861 - 0G437999				REC31-78172A1
V-135 Std. Rotation, 2:1 Ratio,		1997-04	USA	0G438000 +				REC31-30894A1
V-135 Counter Rotation,		1997-04	USA	0G438000 +				REC31-30894A1
V-135 DFI Std. Rotation, 2:1,		1998-04	USA	0G590000 +				REC31-30894A1
V-135 DFI Counter Rotation,		1998-04	USA	0G590000 +				
V-150 Std. Rotation, 2:1 Ratio,		1986-88	USA	0A904646 - 0G437999				REC31-78172A1
V-150 Counter Rotation, 2:1,		1989-90	USA	0C100861 - 0G437999				REC31-30894A1
V-150 (XR4, MAG II) Torpedo		1988-91	USA	0C239553 - 04303045				REC31-78172A1
V-150 (XR4, MAG III) Torpedo		1988-91	USA	0D082000 - 0G437999	REC43-44104T2			REC31-78172A1
V-150 EFI Std. Rotation, 1.87:1,		1993-95	USA	0D082000 - 0G437999	REC43-44104T2			REC31-78172A1
V-150 EFI Counter Rotation, 1.87:1,		1993-95	USA	0D082000 - 0G437999				
V-150 Std. Rotation, 2:1,		1996-98	USA	0G438000 +				REC31-30894A1
V-150 Counter Rotation,		1996-98	USA	0G438000 +				
V-150 (XR6, MAG III) Std. Rot., 1.87:1,		1996-98	USA	0G438000 +				REC31-30894A1
V-150 EFI Std. Rot., 1.87:1,		1996-98	USA	0G438000 +				REC31-30894A1
V-150 EFI Counter Rot., 1.87:1,		1996-98	USA	0G438000 +				
V-150 DFI Std. Rot., 1.87:1,		1998	USA	0G590000 +				REC31-30894A1
V-150 DFI Counter Rot., 1.87:1,		1998	USA	0G590000 +				
V-175 Std. Rot		1980-81	USA	5393737 - 6618750	REC11770			REC31-78172A1
V-175 Std. Rot.,		1980-81	AUS	8064250 +	REC11770			REC31-78172A1
V-175 Std. Rot., 1.87:1 Ratio,		1985-88	USA	6618751 - 0G437999	REC43-44104T2			REC31-78172A1
V-175 Counter Rot., 1.87:1 Ratio,		1985-88	USA	6618751 - 0G437999				REC31-78172A1
V-175 EFI Std. Rot., 1.87:1,		1991	USA	0D000750 - 0G437999	REC43-44104T2			REC31-78172A1
V-175 EFI Counter Rot., 1.87:1,		1991	USA	0D082000 - 0G437999				REC31-78172A1
V-175 Std. Rot., 1.87:1,		1996-98	USA	0G438000 +				REC31-30894A1
V-175 Counter Rot., 1.87:1,		1996-98	USA	0G438000 +				REC31-30894A1
V-175 EFI Std. Rot., 1.87:1,		1996-98	USA	0G438000 +				REC31-30894A1
V-175 Counter Rot., 1.87:1,		1996-98	USA	0G438000 +				REC31-30894A1
V-200 Std. Rot.		1978-79	USA	5393737 - 6073191	REC11770			REC31-78172A1
V-200 Std. Rot.		1980-81	AUS	8061595 - 8065672	REC11770			REC31-78172A1
V-200 Std. Rot.		1982-84	USA	6073192 - 6625220				REC31-78172A1
V-200 Std. Rot., 1.87:1,		1985-88	USA	6625221 - 0C291519	REC43-44104T2			REC31-78172A1
V-200 Counter Rot., 1.87:1,		1989-90	USA	0C100861 - 0G437999				
V-200 Std. Rot., 1.87:1,		1991	USA	0C291520 - 0G437999	REC43-44104T2			REC31-78172A1
V-200 EFI Std. Rot., 1.87:1,		1989-90	USA	0C100861 - 0C291519	REC43-44104T2			REC31-78172A1
V-200 EFI Std. Rot., 1.87:1,		1991	USA	0C291520 - 0G437999	REC43-44104T2			REC31-78172A1
V-200 EFI Counter Rot., 1.87:1,		1992-95	USA	0D082000 - 0G437999				REC31-78172A1
V-200 DFI Std. Rot., 1.87:1,		1997-04	USA	0G437999				REC31-35928T1
V-200 DFI Std. Rot., 1.75:1,		1997	USA	0G438000 +		REC43-859321A3		REC31-30894A1
V-200 DFI Counter Rot., 1.75:1,		1997	USA	0G386496 - 0G437999				REC31-35928T1
V-200 Std. Rot., 1.87:1,		1996-98	USA	0G438000 +				REC31-30894A1
V-200 Counter Rot., 1.87:1,		1996-98	USA	0G438000 +				REC31-30894A1
V-200 EFI Std. Rot., 1.87:1,		1996-98	USA	0G438000 +				REC31-30894A1
V-200 Counter Rot., 1.87:1,		1996-98	USA	0G438000 +				REC31-30894A1
V-200 DFI Counter Rot., 1.75:1,		1997	USA	0G438000 +				REC31-30894A1
200 (3.0L) DFI Std. Rot., 1.75:1 Ratio		1998	USA	0G590000 +		REC43-859321A3		REC31-30894A1
200 (3.0L) Std. Rot., 1.75:1 Ratio		1998	USA	0G590000 +		REC43-859321A3		REC31-30894A1
225 (3.0L) DFI Std. Rot., 1.75:1 Ratio		1998	USA	0G590000 +		REC43-859321A3		REC31-30894A1
225 (3.0 Carb) Sea Pro , 1.62:1		1994-98	USA	- 0G437999	REC43-878087A4	REC43-878087A4	REC43-828073A1	REC31-35928T1/ REC31-828439A2
225 (3.0 Carb) Sea Pro , 1.75:1		1994-98	USA	- 0G437999				REC31-35928T1/ REC31-828439A2
V-220 Std. Rot., 1.87:1 Ratio		1987-88	USA	B117316 +	REC43-44104T2			REC31-78172A1
V-225 Std. Rot.,		1980-81	USA	5628028 +				REC31-78172A1
225 (3.0 Carb) Std. Rot., 1.62:1 Ratio		1994-98	USA	0D280813 +	REC43-878087A4	REC43-878087A4	REC43-828073A1	REC31-35928T1/ REC31-828439A2
225 (3.0L) EFI Std. Rot., 1.75:1 Ratio		1995-98	USA	0G129222-0G437999				REC31-30894A1
225 (3.0L) EFI Std. Rot., 1.75:1 Ratio		1995-98	USA	0G438000 +		REC43-859321A3		REC31-30894A1
225 (3.0L) EFI Std. Rot., 1.87:1 Ratio		1995-98	USA	0G438000 +				REC31-30894A1
250 (3.0L) EFI Std. Rot., 1.75:1 Ratio		1995-98	USA	0G129222-0G437999		REC43-859321A3		REC31-30894A1
250 (3.0L) EFI Std. Rot., 1.75:1 Ratio		1995-98	USA	0G438000 +		REC43-859321A3		REC31-30894A1
250 (3.0L) EFI Std. Rot., 1.87:1 Ratio		1995-98	USA	0G438000 +				REC31-30894A1
250 / 275 Std. Rotation		1989-94	USA	C101891 +				REC31-35928T1

SELECTORES
CLUTCH DOGS
SELETTORI

Ref.	R.O.	Dientes contrarotación Jaw Reverse Denti Controrotanti
REC52-853594T	52-853594T	6
REC52-822539T	52-822539T	3
REC52-850048T	52-850048T	6
REC52-859340T	52-859340T	6

REC52-853594T

REC52-822539T

REC52-850048T

REC52-859340T

Ref.	R.O.
REC6E5-45631-00	52-96313M

4A (6E0)
5C (6E3)

Ref.	R.O.
REC664-45631-00	52-81644T

20C (Thru Propex)
25C/K (Thru Propex)
28
30a / w30cw/Marathon

Ref.	R.O.
REC682-45631-00	52-84274M

9.9C
15C/K/(long)
W15

TUERCA DE PIÑÓN
PINION NUTS
DADI PIGNONI

Ref.	R.O.
REC11-35921	11-35921
REC313359	11-55910

GUÍA SELECTORES
CLUTCH DOGS APPLICATION
GUIDA SELETTORI

4 TIEMPOS STROKES

MODELO MODEL MODELLO	Cyl.	SERIE SERIAL SERIE	REDUCCIÓN 2:1 RATIO 2:1 RIDUZIONI 2:1	REDUCCIÓN 1.83:1 RATIO 1.83:1 RIDUZIONI 1.83:1	REDUCCIÓN 2.31:1 RATIO 2.31:1 RIDUZIONI 2.31:1	REDUCCIÓN 2.33:1 RATIO 2.33:1 RIDUZIONI 2.33:1
30		0P017000-0P153499			**REC52-850048T**	
30 Carb	3	0P153500-0P400999			**REC52-850048T**	**REC52-850048T**
40		9944807-0P153499			**REC52-850048T**	
40	4	0P094500-0P206999			**REC52-850048T**	
40 Carb	3	0P153500 +				
40 EFI	4	0P153500 +				
50		0P017000 +			**REC52-850048T**	
50	4	0P094500 +			**REC52-850048T**	
50 EFI	4	0P153500 +			**REC52-850048T**	**REC52-850048T**
60	4	0P094500-0P206999			**REC52-850048T**	
60 EFI	4	0P153500-0P515896				**REC52-850048T**
60 EFI	4	0P515897 +				

GUÍA SELECTORES
CLUTCH DOGS APPLICATION
GUIDA SELETTORI

2 TIEMPOS STROKES

MODELO MODEL MODELLO	Cyl.	AÑO YEAR ANNO	PAÍS COUNTRY PAESE	SERIE SERIAL SERIE	SELECTOR CLUTCH DOG SELETTORE
50	3	1991-95	USA	0D000750-0G589999	**REC52-850048T**
50	3	1991-95	BEL	9683055-9973099	**REC52-850048T**
55	3	1996	USA	0D000750 +	**REC52-850048T**
55	3	1996	BEL	9741042 +	**REC52-850048T**
60 Standard, Non Bigfoot	3	1991-95	USA	0D000750 +	**REC52-850048T**
60 Standard, Non Bigfoot	3	1991-95	BEL	9683055 +	**REC52-850048T**
60 3 Jaw Rev. Clutch Bigfoot	3	1991-95	USA	0D000750-0G589999	**REC52-822539T**

MODELO MODEL MODELLO	Cyl.	AÑO YEAR ANNO	PAÍS COUNTRY PAESE	SERIE SERIAL SERIE	SELECTOR CLUTCH DOG SELETTORE
60 3 Jaw Rev. Clutch Bigfoot	3	1991-95	BEL	9683055-9973099	**REC52-822539T**
60 6 Jaw Rev. Clutch Bigfoot	3	1991-95	USA	0D000750-0G589999	**REC52-850048T**
60 6 Jaw Rev. Clutch Bigfoot	3	1991-95	BEL	9683055-9973099	**REC52-850048T**
60 6 Jaw Rev. Clutch Bigfoot	3	1998	USA	590000 +	**REC52-850048T**
60 6 Jaw Rev. Clutch Bigfoot	3	1998	BEL	9973100 +	**REC52-850048T**
70 3 Jaw Rev. Clutch	3	1987	USA	0A996142-0C221999	**REC52-822539T**
70 3 Jaw Rev. Clutch	3	1987	BEL	9483121-9589038	**REC52-822539T**
70 6 Jaw Rev. Clutch	3	1987	USA	0A996142-0C221999	**REC52-850048T**
70 6 Jaw Rev. Clutch	3	1987	BEL	9483121-9589038	**REC52-850048T**
75 3 Jaw Rev. Clutch	3	1990-93	USA	0A996142 +	**REC52-822539T**
75 3 Jaw Rev. Clutch	3	1990-93	BEL	9483121 +	**REC52-822539T**
75 6 Jaw Rev. Clutch	3	1994-98	USA	0A996142 +	**REC52-850048T**
75 6 Jaw Rev. Clutch	3	1994-98	BEL	9483121 +	**REC52-850048T**
80 3 Jaw Rev. Clutch	3	1987	USA	0A996142-0C221999	**REC52-822539T**
80 3 Jaw Rev. Clutch	3	1987	BEL	9483121-9589038	**REC52-822539T**
80 6 Jaw Rev. Clutch	3	1987	USA	0A996142-0C221999	**REC52-850048T**
80 6 Jaw Rev. Clutch	3	1987	BEL	9483121-9589038	**REC52-850048T**
90 3 Jaw Rev. Clutch	3	1987	USA	0A996142 +	**REC52-822539T**
90 3 Jaw Rev. Clutch	3	1987	BEL	9483121 +	**REC52-822539T**
90 6 Jaw Rev. Clutch	3	1987	USA	0A996142 +	**REC52-850048T**
90 6 Jaw Rev. Clutch		1987	BEL	9483121 +	**REC52-850048T**
100 3 Jaw Rev. Clutch		1988-93	USA	0B209468 +	**REC52-822539T**
100 3 Jaw Rev. Clutch		1988-93	BEL	9523034 +	**REC52-822539T**
100 High Altitude 3 Jaw Rev. Clutch		1988-93	USA	0B209468 +	**REC52-822539T**
100 High Altitude 3 Jaw Rev. Clutch		1988-93	BEL	9523034 +	**REC52-822539T**
100 6 Jaw Rev. Clutch		1988-98	USA	0B209468 +	**REC52-850048T**
100 6 Jaw Rev. Clutch		1988-98	BEL	9523034 +	**REC52-850048T**
100 High Altitude 6 Jaw Rev. Clutch		1988-93	USA	0B209468 +	**REC52-850048T**
100 High Altitude 6 Jaw Rev. Clutch		1988-93	BEL	9523034 +	**REC52-850048T**
115 3 Jaw Rev. Clutch		1988-93	USA	0C100000 +	**REC52-822539T**
115 3 Jaw Rev. Clutch		1988-93	BEL	9559771 +	**REC52-822539T**
115 High Altitude 3 Jaw Rev. Clutch		1989-93	USA	0C100000 +	**REC52-822539T**
115 High Altitude 3 Jaw Rev. Clutch		1989-93	BEL	9559771 +	**REC52-822539T**
115 6 Jaw Rev. Clutch		1989-93	USA	0C100000 +	**REC52-850048T**
115 6 Jaw Rev. Clutch		1989-93	BEL	9559771 +	**REC52-850048T**
115 High Altitude 6 Jaw Rev. Clutch		1989-93	USA	0C100000 +	**REC52-850048T**
115 High Altitude 6 Jaw Rev. Clutch		1989-93	BEL	9559771 +	**REC52-850048T**
125 3 Jaw Rev. Clutch		1994-98	USA	0D283222 +	**REC52-822539T**
125 3 Jaw Rev. Clutch		1994-98	BEL	9793577 +	**REC52-822539T**
125 High Altitude 3 Jaw Rev. Clutch		1994-98	USA	0D283222 +	**REC52-822539T**
125 High Altitude 3 Jaw Rev. Clutch		1994-98	BEL	9793577 +	**REC52-822539T**
125 6 Jaw Rev. Clutch		1994-98	USA	0D283222 +	**REC52-850048T**
125 6 Jaw Rev. Clutch		1994-98	BEL	9793577 +	**REC52-850048T**
125 High Altitude 6 Jaw Rev. Clutch		1994-98	USA	0D283222 +	**REC52-850048T**
125 High Altitude 6 Jaw Rev. Clutch		1994-98	BEL	9793577 +	**REC52-850048T**
V-135 Std. Rotation, 2:1 Ratio, Ratching		1986-88	USA	0A904646-0G437999	
V-135 Counter Rotation, Ratching		1989-90	USA	0C100861-0G437999	
V-135 Std. Rotation, 2:1 Ratio, Non-Ratching		1997-04	USA	0G438000 +	**REC52-859340T**
V-135 Counter Rotation, Non-Ratching		1997-04	USA	0G438000 +	**REC52-859340T**
V-135 DFI Std. Rotation, 2:1, Non-Ratching		1998-04	USA	0G590000 +	**REC52-859340T**
V-135 DFI Counter Rotation, Non-Ratching		1998-04	USA	0G590000 +	**REC52-859340T**
V-150 Std. Rotation, 2:1 Ratio, Ratching		1985	USA	6616991-0A904645	
V-150 Std. Rotation, 2:1 Ratio, Ratching		1986-88	USA	0A904646-0G437999	
V-150 Counter Rotation, 2:1, Ratching		1989-90	USA	0C100861-0G437999	
V-150 (XR4, MAG II) w/ 4-1/4 Dia. Torpedo		1988-91	USA	0C239553-04303045	**REC52-822539T**
V-150 (XR4, MAG III) w/ 4-1/4 Dia. Torpedo		1988-91	USA	0D082000-0G437999	
V-150 EFI Std. Rotation, 1.87:1, Ratching		1993-95	USA	0D082000-0G437999	
V-150 EFI Counter Rotation, 1.87:1, Ratching		1993-95	USA	0D082000-0G437999	
V-150 Std. Rotation, 2:1, Non-Ratching		1996-98	USA	0G438000 +	**REC52-859340T**
V-150 Counter Rotation, Non-Ratching		1996-98	USA	0G438000 +	**REC52-859340T**
V-150 (XR6, MAG III) Std. Rot., 1.87:1, Non-Ratching		1996-98	USA	0G438000 +	**REC52-859340T**
V-150 EFI Std. Rot., 1.87:1, Non-Ratching		1996-98	USA	0G438000 +	**REC52-859340T**
V-150 EFI Counter Rot., 1.87:1, Non-Ratching		1996-98	USA	0G438000 +	**REC52-859340T**
V-150 DFI Std. Rot., 1.87:1, Non-Ratching		1998	USA	0G590000 +	**REC52-859340T**
V-150 DFI Counter Rot., 1.87:1, Non-Ratching		1998	USA	0G590000 +	**REC52-859340T**
V-175 Std. Rot., w/ pre-load pin in drive shaft		1980-81	USA	5393737-6618750	
V-175 Std. Rot., w/ pre-load pin in drive shaft		1980-81	AUS	8064250 +	
V-175 Std. Rot., 1.87:1 Ratio, Ratching		1985-88	USA	6618751-0G437999	
V-175 Counter Rot., 1.87:1 Ratio, Ratching		1985-88	USA	6618751-0G437999	
V-175 EFI Std. Rot., 1.87:1, Ratching		1991	USA	0D000750-0G437999	
V-175 EFI Counter Rot., 1.87:1, Ratching		1991	USA	0D082000-0G437999	

MODELO MODEL MODELLO	Cyl.	AÑO YEAR ANNO	PAÍS COUNTRY PAESE	SERIE SERIAL SERIE	SELECTOR CLUTCH DOG SELETTORE
V-175 Std. Rot., 1.87:1, Non-Ratching		1996-98	USA	0G438000 +	
V-175 Counter Rot., 1.87:1, Non-Ratching		1996-98	USA	0G438000 +	**REC52-859340T**
V-175 EFI Std. Rot., 1.87:1, Non-Ratching		1996-98	USA	0G438000 +	**REC52-859340T**
V-175 Counter Rot., 1.87:1, Non-Ratching		1996-98	USA	0G438000 +	**REC52-859340T**
V-200 Std. Rot. w/ pre-load pin in drive shaft		1978-79	USA	5393737-6073191	
V-200 Std. Rot. w/ pre-load pin in drive shaft		1980-81	AUS	8061595-8065672	
V-200 Std. Rot. w/ pre-load pin in drive shaft		1982-84	USA	6073192-6625220	
V-200 Std. Rot., 1.87:1, Ratching		1985-88	USA	6625221-0C291519	
V-200 Counter Rot., 1.87:1, Ratching		1989-90	USA	0C100861-0G437999	
V-200 Std. Rot., 1.87:1, Ratching		1991	USA	0C291520-0G437999	
V-200 EFI Std. Rot., 1.87:1, Ratching		1989-90	USA	0C100861-0C291519	
V-200 EFI Std. Rot., 1.87:1, Ratching		1991	USA	0C291520-0G437999	
V-200 EFI Counter Rot., 1.87:1, Ratching		1992-95	USA	0D082000-0G437999	
V-200 DFI Std. Rot., 1.87:1, Ratching		1997-04	USA	0G437999	
V-200 DFI Std. Rot., 1.75:1, Non-Ratching		1997	USA	0G438000 +	**REC52-859340T**
V-200 DFI Counter Rot., 1.75:1, Ratching		1997	USA	0G386496-0G437999	
V-200 Std. Rot., 1.87:1, Non-Ratching		1996-98	USA	0G438000 +	**REC52-859340T**
V-200 Counter Rot., 1.87:1, Non-Ratching		1996-98	USA	0G438000 +	**REC52-859340T**
V-200 EFI Std. Rot., 1.87:1, Non-Ratching		1996-98	USA	0G438000 +	**REC52-859340T**
V-200 Counter Rot., 1.87:1, Non-Ratching		1996-98	USA	0G438000 +	**REC52-859340T**
V-200 DFI Counter Rot., 1.75:1, Non-Ratching		1997	USA	0G438000 +	**REC52-859340T**
200 (3.0L) DFI Std. Rot., 1.75:1 Ratio		1998	USA	0G590000 +	**REC52-853594T**
200 (3.0L) Std. Rot., 1.75:1 Ratio		1998	USA	0G590000 +	**REC52-853594T**
225 (3.0L) DFI Std. Rot., 1.75:1 Ratio		1998	USA	0G590000 +	**REC52-853594T**
225 (3.0 Carb) Sea Pro Std. Rot., 1.62:1		1994-98	USA	- 0G437999	**REC52-853594T**
225 (3.0 Carb) Sea Pro Std. Rot., 1.75:1		1994-98	USA	- 0G437999	**REC52-853594T**
V-220 Std. Rot., 1.87:1 Ratio		1987-88	USA	B117316 +	**REC52-853594T**
V-225 Std. Rot., w/ pre-load pin in drive shaft		1980-81	USA	5628028 +	**REC52-853594T**
225 (3.0 Carb) Std. Rot., 1.62:1 Ratio		1994-98	USA	0D280813 +	**REC52-853594T**
225 (3.0L) EFI Std. Rot., 1.75:1 Ratio		1995-98	USA	0G129222-0G437999	**REC52-853594T**
225 (3.0L) EFI Std. Rot., 1.75:1 Ratio		1995-98	USA	0G438000 +	**REC52-853594T**
225 (3.0L) EFI Std. Rot., 1.87:1 Ratio		1995-98	USA	0G438000 +	**REC52-853594T**
250 (3.0L) EFI Std. Rot., 1.75:1 Ratio		1995-98	USA	0G129222-0G437999	**REC52-853594T**
250 (3.0L) EFI Std. Rot., 1.75:1 Ratio		1995-98	USA	0G438000 +	**REC52-853594T**
250 (3.0L) EFI Std. Rot., 1.87:1 Ratio		1995-98	USA	0G438000 +	**REC52-853594T**
250 / 275 Std. Rotation		1989-94	USA	C101891 +	**REC52-853594T**

EJES HÉLICE
PROP SHAFTS
ASSE ELICHE

REF	RO. OEM	HP	DESCRIPCIÓN DESCRIPTION DESCRIZIONE	LONGITUD LENGTH LUNGHEZZA	Ø CAÑA CARRIER NEEDLE BEARING JOURNAL Ø Ø GAMBO	ESTRIAS SPLINES DENTI	TOPE HÉLICE PROP THRUST WASHER PUNTO ELICA
REC44-824110	44-824110	V6	Cola moderna V6 (3.0L) Late Gearcase V6 (3.0L) Piede moderna V6 (3.0L)	15 - 1/2" 39,37 cm	1 - 3/16" 3,016 cm	15	**REC12-31211Q01**
REC44-94148	44-94148	V6	Cola Alpha moderna. **NO MONTAR EN EMBARCACIONES DE COMPETICIÓN** Late Alpha Gearcase. **DON'T USE ON BASS TORNAMENT BOAT ENGINES** Piede Alpha moderno. **NON MONTARE SU IMBARCAZIONI DA COMPETIZIONE**	15 - 1/2" 39,37 cm	1 - 3/16" 3,016 cm	15	**REC12-31211Q01**
	44-93003		Cola 6 en línea antigua Early Inline 6 Gearcase Piede 6 in línea vecchio	15 - 1/4" 38,73 cm	1 - 3/16" 3,016 cm	15	**REC12-31211Q01**
REC44-12238T	44-12238T	L4, V6, XR4, XRG (3 cyl)	Modelo moderno Late Gearcase Modello moderno	15 - 1/2" 39,37 cm	1 - 3/16" 3,016 cm	15	**REC13191Q01**
REC44-850308	44-850308	(3 - 4 cyl)	Modelo moderno Late Gearcase Modello moderno	15 - 1/2" 39,37 cm	1 - 3/16" 3,016 cm	15	**REC13191Q01**
	44-75365	(2, 3, 4 Cyl)	Cola pequeña Small Gearcase Piede piccola	12 - 1/2" 39,37 cm	7/8" 2,22 cm	13	**REC73345A1**

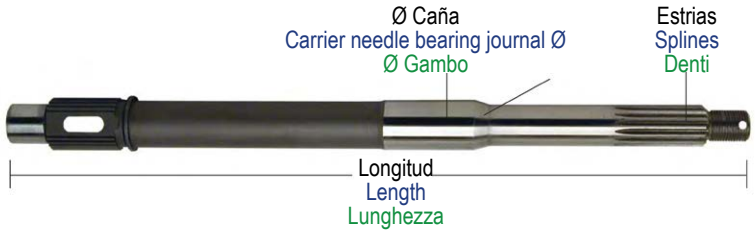

EJES TRANSMISIÓN
DRIVE SHAFTS
ASSE TRASMISIONE

REF	RO. OEM	HP	DESCRIPCIÓN DESCRIPTION DESCRIZIONE	LONGITUD LENGTH LUNGHEZZA	Ø ALOJAMIENTO PINION BEARING JOURNAL Ø Ø ALLOGGIAMENTO	ESTRIAS SPLINES DENTI
	45-98180	35 - 70 HP	Cola pequeña con pasador Small Gearcase with Pre-load pin Piede picolo con chiavistello	30" 76,2 cm	7/8" 2,22 cm	13
	45-812731	50, 55, 60 HP (3 cyl)	Modelo moderno cola pequeña Late small Gearcase Mpdello moserno piede picolo	31 - 1/8" 79,05 cm	7/8" 2,22 cm	14
	45-43031A1	55, 60-125 HP (3 - 4 cyl)	Modelo moderno cola larga Late large Gearcase Modello moderno piede lungo	31 - 7/8" 80,96 cm	1" 2,54 cm	17
	45-826736A1	55, 60-125 HP (3 - 4 cyl)	Modelo moderno cola larga Late large Gearcase Modello moderno piede lungo	31 - 5/16" 79,05 cm	1" 2,54 cm	17
	45-76088A2	50, 65, 75 HP (3 cyl)	Cola antigua con pasador Early Small Gearcase with Pre-load pin Piede vecchio con chiavistello	30" 76,2 cm	7/8" 2,22 cm	13
	45-44000-1	V6	Cola Alpha moderna Late Alpha Gearcase Piede Alpha moderno	32 - 3/16" 84,29 cm	1 - 1/8" 2,85 cm	13
	45-42646		Cola 6 en línea antigua Early Inline 6 Gearcase Piede 6 in línea vecchio	30 - 3/4" 80,64 cm	1" 2,54 cm	17
	45-98682A1	V6	Cola V6 con pasador V6 Gearcase with Pre-load pin Piede V6 con chiavistello	32 - 1/4" 84,45 cm	1" 2,54 cm	11
REC45-816919	45-816472	V6	Cola moderna V6 (3.0L) Late Gearcase V6 (3.0L) Piede moderna V6 (3.0L)	18 - 1/4" 46,35 cm	1 - 1/8" 2,85 cm	13

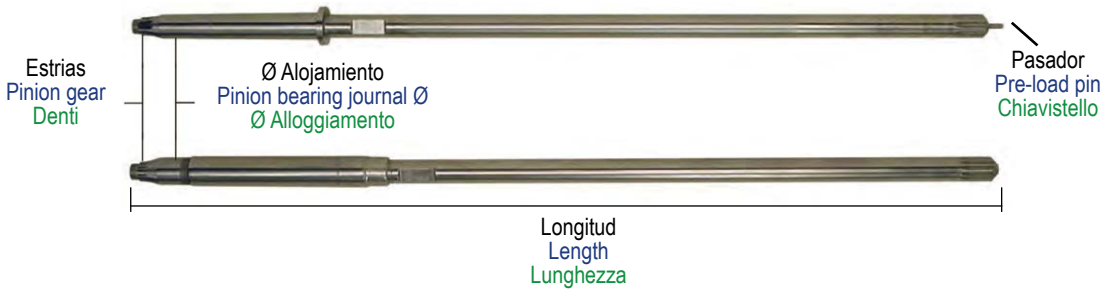

KITS REPARACIÓN BOMBA AGUA
WATER PUMP SERVICE KITS
KIT RICAMBI POMPA ACQUA

Ref.	R.O.
REC46-70941A3	46-70941A3

MOTORES / ENGINES / MOTORI
(1975-85)
4, 4.5, 7.5, 9.8 HP

Ref.	R.O.
REC47-89981Q1	47-89981T2

MOTORES / ENGINES / MOTORI
4 - 9.8 HP
Ø interior impulsor 0.456
Impeller Int. Ø 0.456
Ø Interno girante 0.456

Ref.	R.O.
REC46-42040T5	46-42040A5

MOTORES / ENGINES / MOTORI
6 -15 HP
(2 & 4 Tiempos / 2 & 4 Strokes / 2 & 4 Tempi)

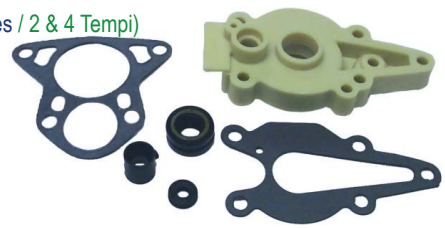

Ref.	R.O.
REC46-99157T2	46-99157T2

MOTORES / ENGINES / MOTORI
(1984+)
15XD, 18XD, 20XD, 25XD, 25 HP (3 cyl)
8- 25 HP
(2 & 4 Tiempos / 2 & 4 Strokes / 2 & 4 Tempi)