PASAMAMPAROS
THRU HULL
PASSASCAFO

Ref.	R.O. OEM	Manguera Hose Tubo	Envase (x blister) Pack (x blister) Qnt (x blister)
GS31064		3/8"	1

GOLDENSHIP

Para atravesar mamparos de hasta 12mm. Fabricado en latón.
For bulkhead up to 12 mm. Made in machined brass.
Per attraversare paratie fino a 12mm. Fabbricato in ottone.

CONECTORES / CONNECTOR / ATTACCO

Ref.	Rosca Thread Passo	Envase (x blister) Pack (x skinpack) Qnt (x Blister)
GS31068	1/4" NPT	1

CODO DEPOSITO
Fabricado en latón.
TANK ELBOW
Made in machined brass.
GOMITO SERBATOIO
Fabbricato in ottone.

GOLDENSHIP

Ref.	Rosca Thread Passo	Envase (x blister) Pack (x skinpack) Qnt (x Blister)
GS31069	1/4" NPT	1

CONECTOR "T"
Para conectar dos motores a un sólo depósito, o viceversa. Fabricado en latón.
CONNECTOR "T"
To connect two motors to a single deposit, or vice versa. Made in machined brass.
CONNETTORE "T"
Per collegare due motori ad un solo serbatoio, o viceversa. Fabbricato in ottone.

GOLDENSHIP

CONECTOR COMBUSTIBLE
FUEL CONNECTOR
ATTACCO COMBUSTIBLE

Ref.	R.O.
REC6G1-24304-02	6G1-24304-02

Ref.	R.O. OEM	Manguera Hose Tubo	Envase (x blister) Pack (x blister) Qnt (x blister)
GS31074	6Y1-24305-06	1/4"	1
REC6G1-24305-05	6G1-24305-05	5/16"	1
GS31076	6E5-24305-06	3/8"	1

GOLDENSHIP

CONECTOR DOBLE
DOUBLE CONNECTOR
CONNETTORE DOPPIO

Ref.	R.O. OEM	Manguera Hose Tubo	Envase (x blister) Pack (x blister) Qnt (x blister)
GS31092		8 mm	1

GOLDENSHIP

TOMA TANQUE COMBUSTIBLE
FUEL TANKS CONNECTOR
FILETTATURA PER SERBATOIO BENZINA

Ref.	Rosca Thread Passo		Envase (x blister) Pack (x skinpack) Qnt (x Blister)
GS31073	1/4" NPT		1
GS31020	1/4" NPT	Vertical / Vertical / Verticale	1

Fabricado en latón.
Made in machined brass.
Fabbricato in ottone.

GOLDENSHIP

GS31073

GS31020

FILTROS COMBUSTIBLE Y ELEMENTOS
FUEL FILTERS AND ELEMENTS
SUPPORTI, FILTRI BENZINA E RACCORDI

BRACKET / BRACKET / SUPPORTO

Ref.	Braket Bracket Supporto	Tomas NTPF Ports Filetto
REC25000	Aluminio / Aluminium / Alluminio	1/4 "
GLM25010	INOX AISI316 / S.S. AISI316	1/4"
GLM25020	Aluminio / Aluminium / Alluminio	3/8 "
GLM25030	INOX AISI316 / S.S. AISI316	3/8"
RECOBBRACKET	Plástico / Plastic / Plastica	1/4 "

Con 2 tapones de bronce y 2 tubos de extensión.
(2 entradas y 2 salidas).
With 2 brass plugs and 2 extension tubes.
(2 inputs & 2 outputs).
Con 2 tappi di bronzo e 2 tubi di estensione.
(2 ingressi entrata carburante e 2 uscite carburante).

REC25000 - GLM25020

GLM25010 - GLM25030

RECOBBRACKET

YAMAHA

RECAMBIOS MARINOS S.L.

FILTRO COMBUSTIBLE SEPARADOR DE AGUA
WATER SEPARATING FUEL FILTER
FILTRO SEPARATORE ACQUA-BENZINA

Ref.	Micras Micron Micron	Altura Height Altezza
REC24942	10	4-7/16”
REC35-802893Q01	10	3-3/4”
REC855686	28	4-7/16”
REC35-802893Q	25	3-3/4”
RACPFF5510	10	4-7/16”

RACOR

RACPFF5510

RECmar

REC24942

REC35-802893Q01

REC855686

REC35-802893Q

FILTRO ORIGINAL
OEM FILTER
FILTRO BENZINA ORIGINALE

Ref.	Micras Micron Micron	Altura Height Altezza
RM35-802893Q	10	3-3/4”

REC35-802893Q

FILTRO CON BRACKET
OEM FILTER WITH BRACKET
FILTRO BENZINA CON SUPPORTO

Ref.	Micras Micron Micron	Tomas NPTF Ports Filetto	Flujo Flow Flusso
REC24950	25	1/4”	50 GPH
REC24952	10	1/4”	50 GPH

Bracket de Aluminio. Con 2 tapones de bronce y 1 tubo de extensión.
Cast Aluminium Bracket. With 2 brass plugs & 1 extension tube.
Supporto in alluminio. Con 2 tappi di bronzo e 1 tubo di estensione.

REC24950

REC24952

Ref.	Micras Micron Micron	Tomas NPTF Ports Filetto	Flujo Flow Flusso
GLM24960	28	1/4”	50 GPH
GLM24956	28	1/4”	50 GPH
GLM24957	10	1/4”	50 GPH

Bracket Inox. AISI316. Con 2 tapones de bronce y 2 tubos de extensión.
With S.S. AISI316 Bracket. With 2 brass plugs & 2 extension tubes.
Supporto Inox AISI316. Con 2 tappi di bronzo e 2 tubi di estensione.

GLM24960
Bracket rojo
Red Bracket
Supporto rosso

GLM24956

GLM24957

FILTRO DECANTADOR COMBUSTIBLE CON VASO TRANSPARENTE
COMPLETE FUEL FILTER WITH TRANSPARENT BOWL
FILTRO DI DECANTAZIONE BENZINA COMPLETO CON VASCHETTA TRASPARENTE

Ref.	Elemento Element Cartuccia	Bracket
RAC320R-RAC-01	RACS3213	Aluminio / Alluminum / Auminio
RAC320R-RAC-03		Plastico / Plastic / Plastica

Incluye soporte
Includes bracket.
Con supporto

RACOR

Filtro completo Complet filter Filtro completo	Cartucho recambio Replacement element Cartuccia di ricambio	Capacidad Máx. Max. Capacity Capacità massima
RECOBFILTER	RECOBLEMENT	150 l/h

RECmar

Filtro completo Complet filter Filtro completo	Cartucho recambio Replacement element Cartuccia di ricambio	Capacidad Máx. Max. Capacity Capacità massima
REC90794-46866	REC90794-46868	117l/h

RECmar

LLAVE PARA FILTRO
FILTER KEY
CHIAVE DA FILTRO

Ref.
RECYS-225-15

Filtro completo Complet filter Filtro completo	Micras Micron Micron	Rosca Thread Filettatura	Capacidad Máx. Max. Capacity Capacità massima
RAC490R-RAC-01	10	3/8” NPTF	340 l/h

RACOR

CON PURGADOR. Para motores fueraborda superiores a 150 HP.
WITH PRIMMING PUMP. For outboards engines more than 150 HP.
CON POMPETTA PER RIEMPIRE IL FILTRO. Per motori fuoribordo superiori a 150 hp.

Ref.	R.O. / OEM
RACS3227	YMM-2E227-00
	YMM-2E227-01

ELEMENTO DE RECAMBIO
Para filtros originales Yamaha.
FILTER ELEMENT
Element for original filtres Yamaha.
CARTUCCIA DI RICAMBIO
Per filtri originali Yamaha.

RACORS / RACORS / RACCORDO

Ref.	Rosca Thread Passo	Manguera Hose Tubo	Envase (x blister) Pack (x skinpack) Qnt (x blister)
GS31065	1/4" NPT	3/8" = 9.5 mm	2
GS31166	1/4" NPT	5/16" = 7.9 mm	2
GS31155	3/8" NPT	3/8" = 9.5 mm	2
GS31156	3/8" NPT	5/16" = 7.9 mm	2
GS31157	3/8" NPT	1/4" = 6.4 mm	2

Racor 90º fabricado en latón.
Made in machined brass.
Raccordo 90º prodotto in ottone

GOLDENSHIP

Ref.	Rosca Thread Passo	Manguera Hose Tubo	Envase (x blister) Pack (x skinpack) Qnt (x blister)
GS31066	1/4" NPT	5/16" = 7.9 mm	2
GS31067	1/4" NPT	3/8" = 9.5 mm	2

Fabricado en latón.
Made in machined brass.
Prodotto in ottone

GOLDENSHIP

FILTRO COMBUSTIBLE
FUEL FILTER
FILTRO COMBUSTIBILE

Ref.	Capacidad Capacity Capacità	Manguera Hose Tubo	Envase (x blister) Pack (x skinpack) Qnt (x blister)
GS31001	50 lt/h	6-8 mm	1 x skinpack
GS31002	150 lt/h	8-10 mm	1 x skinpack

Filtro transparente para gasolina o gasoil.
Transparent plastic in line filter for petrol and diesel.
Filtro trasparente per benzina o diesel

GOLDENSHIP

GOLDENSHIP

Ref.	Manguera Hose Tubo	Envase (x blister) Pack (x skinpack) Qnt (x blister)
GS30435	6, 8, 10 mm	1

FILTRO TRANSPARENTE
De metal y cristal. Racors para mangueras de 6-8-10 mm.
TRANSPARENT FILTER
Clear body permits visual inspection. Racors 6-8-10 mm.
FILTRO TRASPARENTE
Di metallo e vetro. Montaggio in linea. Raccordi per tubo da 6-8-10 mm.

Ref.	Ø Manguera / Ø Hose / ØTubo
REC40145	1/4"
REC40155	5/16"
REC40165	3/8"
REC40135	5/16" Entrada In Entrata 3/8" Salida Out Uscita

De plástico / Plastic / In plastica

Ref.	R.O.
PAF4-04120005	6L5-24251-00

MOTORES / ENGINES / MOTORI
3 (1992-02)
F2.5 (2003-12)
F4 (1999-08)

Ref.	R.O.
REC35-80365M	646-24251-02

MOTORES / ENGINES / MOTORI
6 (1989, 1992-99)
8 (1989-99, 2001-02)
F4 (1999-02)
F9.9 (1989-95, 1997-99, 2001-02)
FT 9.9 (1988-90)

Ref.	R.O.
REC68T-24251-00	68T-24251-00

MOTORES / ENGINES / MOTORI
F6, F8 (01+)

Ref.	R.O.
REC6F5-24563-00	6F5-24563-00

MOTORES / ENGINES / MOTORI
9.9 HP

Ref.	R.O.
PAF15-07080000	61N-24560-00

MOTORES / ENGINES / MOTORI
15-60HP

Ref.	R.O.
REC6BG-13915-00	6BG-13915-00

MOTORES / ENGINES / MOTORI
F30 (2013)
F40 (2008-13)
F50 (2005-13)
F60 (2005-13)
F70 (2010-13)
F75 (2005-13)
F90 (2005-13)
T50 (2005-13)
T60 (2005-13)

Ref.	R.O.
REC6C5-24251-00	6C5-24251-00

NEW

MOTORES / ENGINES / MOTORI
F30 (2009+)
F40 (2006+)
F50 (2005+)
F60 (2005+)
F70 (2011+)
F75 (2005)
F80 (2008+)
F100 (2005+)
F115 (2014+)
F130 (2015+)

Ref.	R.O.
REC6D8-WS24A-00	6D8-WS24A-00

MOTORES / ENGINES / MOTORI
F50-F115

Ref.	R.O.
REC6C5-13915-00	6C5-13915-00

MOTORES / ENGINES / MOTORI
F50 (2005-13)
F60 (2005-13)
F70 (2010-13)
F75 (2005-13)
F90 (2005-13)
T50 (2005-13)
T60 (2005-13)

Ref.	R.O.
REC69J-24501-10	69J-24501-10

MOTORES / ENGINES / MOTORI
F150-F225 (2006-14)
F250 (2005-14)

Ref.	R.O.
REC68F-24563-10	68F-24563-10

MOTORES / ENGINES / MOTORI
150-300HP (2004-06)
Z, VZ, LZ

Ref.	R.O.
REC6P3-WS24A-00	6P3-WS24A-00

MOTORES / ENGINES / MOTORI
F150 (2007-11)
Z200 (2007)
Z150/175 (2007)
F225 (2007-11)
F200 (2007-11)
F350 (2008-11)
F250 (2009-11)
Z300 (2007)
F300 (2011)

Ref.	R.O.
REC65L-24563-00	65L-24563-00

MOTORES / ENGINES / MOTORI
F200 (2002-06)
F150 (2004-06)
225FETO (2003)
L/250B (1997-2003)

Ref.	R.O.
REC61A-24563-00	61A-24563-00

MOTORES / ENGINES / MOTORI
V6, 3'1L, D-T

Ref.	R.O.
REC61N-24563-10	6IN-24563-10

MOTORES / ENGINES / MOTORI
9.9HP SX

Ref.	R.O.
REC68V-24563-00	68V-24563-00

MOTORES EUROPEOS
EUROPEAN ENGINES
MOTORI EUROPEI

F40 F80
F50 F100
F60 F115

FILTRO CARBURADOR
ELEMENT, FILTER (CARB INLET)
FILTRO CARBURATORE

Ref.	R.O.
REC67F-14371-01	67F-14371-01

MOTORES / ENGINES / MOTORI

F75	(2003-04)	F90	(2003-04)
F80	(2002-03)	F100	(2002-03)

JUNTA FILTRO COMBUSTIBLE
GASKET FUEL FILTER BOWL
GUARNIZIONE FILTRO BENZINA

Ref.	R.O.
REC6P3-24564-00	6P3-24564-00

MOTORES / ENGINES / MOTORI

F/LF 150 - F300 (2006-14)	VZ150 - VZ300(2006-14)
	Z200 -Z300 (2006-14)

FILTRO VST
VST FILTER
FILTRO VST

Ref.	R.O.
REC68F-13915-00	68F-13915-00

MOTORES / ENGINES / MOTORI

HPDI 150	(2000-05)
V-Max HPDI 150	(2000-09)
HPDI 225	(2003-09)
HPDI 250	(2003-09)
HPDI 300	(2004-09

Ref.	R.O.
REC66K-13915-00	66K-13915-00

MOTORES / ENGINES / MOTORI

DX150	(1999-05)	LX225	(2000-03)
LX150	(1999-01)	S225	(1999)
PX150	(1999)	SX225	(2000-03)
SX150	(1999-04)	V225	(1999)
VX150	(2000-04)	VX225	(2000-04)
LX200	(1999-01)	L250	(1999)
SX200	(1999-05)	LX250	(2000-03)
V200	(1999)	SX250	(2000-03)
VX200	(2000-05)	VX250	(2002-04)
L225	(1999)		

Ref.	R.O.
REC63P-13915-00	63P-13915-00

MOTORES / ENGINES / MOTORI

F150 TXR	(2004-09)	F300 TXR	(2007-09)
F150 TLR	(2004-09)	F300 TUR	(2007-09)
F150 TJR	(2009)	F350 TXR	(2007-09)
LF150 TXR	(2004-09)	F350 TUR	(2007-09)
F250 TXR	(2005-09)	F225 TLR	(2007-09)
F250 TUR	(2005-09)		

Ref.	R.O.
REC65L-13915-00	65L-13915-00

MOTORES / ENGINES / MOTORI

L225	(1997-98)	V200	(1998)
S225	(1997-98)	V225	(1998)
L250	(1997-98)		

Ref.	R.O.
REC60V-24251-01	60V-24251-01

MOTORES / ENGINES / MOTORI

LZ150	(2005)	VZ225	(2005-09)
VZ150	(2005-10)	LZ250	(2005)
Z150	(2005)	VZ250	(2005-09)
VZ175	(2005-10)	Z250	(2005)
Z175	(2005)	LZ300	(2005-06)
LZ200	(2005-10)	VZ300	(2005-09)
VZ200	(2005-09)	Z300	(2005-06)
Z200	(2005-10)		

Ref.	R.O.
REC68V-13915-00	68V-13915-00

MOTORES / ENGINES / MOTORI

F115	(2000-09)	F225 TXR	(2002-09)
F200 TXR	(2002-09)	F225 TUR	(2002-09)
LF200 TXR	(2002-09)		

MODELO / MODEL / MODELLO					R.O. / Replaces	Ref.
3A	F4A				6L5-24251-00	**PAF4-04120005**
4A F8B	F4A F9.9A/B	5C FT9.9A	6C/D and all HPDI Models	8C	646-24251-02	**REC35-80365M**
FT8D					68T-24251-00	**REC68T-24251-00**
9.9D 40H/Q 75A 130B/(L) 225B(--'93)	15D 50D/G 80A 150C/(L)	20C/D 55B 85A 175B	25D/J/N/Q 60F 90A/100A 200B/PRO	30A/D/G 70B 115B/C/(L) 200V	6F5-24563-00	**REC6F5-24563-00**
9.9C/D/F 40H/Q/V/X/Y/F 50D/G/H/PRO 75A/C/PRO PROV 150F ('94)	15C/D/F 40A/B/F 50 75/80A 100/115B/C/(L) 175B/D/(L)	20/D/F 45A/F 55B 85A 130B/D 200B/(L)	25B/D/J/N/Q/V 50A/B/FT 60F 90A 150H/ (L) 200F/G/PROV	30D/GH 50A 70B 100A/ 150C/(L) 200/225B/D	61N-24563-10	**REC61N-24563-10**
FT 25A/FT	9.9D 25B/F	F9.9C/F 30A/F	15A/F 40B	20A/F	65W-24251-00	**REC40145**
F80A	F100A				67F-24251-02	**REC40165**
F40C 80B/F	F50F 100D/F(L)	FT50C/G/F 115A	60A/C/FT	60B/D/F	68V-24563-00	**REC68V -24563-00**
150A/(L)	225C/(L)	250A			61A-24563-00	**REC61A-24563-00**
225G/(L) 250A	250B/F(L)	150A/F(L)	200A/F(L)	225A/F(L)	65L-24563-00	**REC65L-24563-00**
All HPDI Models (*Fuel Strainer*)					60V-24251-01	**REC60V-24251-01**

FILTROS ACEITE
OIL FILTERS
FILTRI OLIO

Ref.	R.O.
REC61A-13411-00	61A-13411-00

MOTORES / ENGINES / MOTORI

Z250TR
DETO
FETO (2003-07)
250B
AETO (93-2006)
L250B
TXR (2000-03)
225G-GETOL (99-2003)
Z300 AETO
TXR (04-2007)
L250G-GETOX (06-2010)

Ref.	R.O.
REC6E5-13411-00	6E5-13411-00

MOTORES / ENGINES / MOTORI

V-Z 200T
PETO
TLR (2001-07)
Z150 F
TXRA
PETOLX (96-2007)
175D
DETO (96-2003)
Z1200F-FETO (96-2010)
225D-DETOX (2000-03)
115 B
BET (88-2002)
130BETO (91-2001)
115CETO
TLR
TXR (91-2013)

Ref.	R.O.
REC6J8-13411-00	6J8-13411-00

MOTORES / ENGINES / MOTORI

25Q-QEO (1990-94)
50
G-GEO-GETOL (93-2007)
50H-HR-MDO (96-2002)
40V-MH-MD
VETO
VE-O (95-2013)
40YETO-YETOL (2005-07)
30DETOL
DEOS
MH (2011-13)
GOLTRA
F
FETO
L (89-2013)
70BETO
B
BEMO (89-2013)
25J
JEQ
JETO
NEM
W (88-2013)
20D
EM-ML
W (88-2013)

Ref.	R.O.
REC68F-13440-00	68F-13440-00

MOTORES / ENGINES / MOTORI

LZ
LZ300
TR
AETO-X-V (2004-07)
Z175TR
GETO-X (2002-07)
V
Z200T
PETO
TLR (2001-07)
Z250
TXR
DETO
X (2003-07)
Z150P
TXR
PETO (2000-07)

Ref.	R.O.
REC6G8-13440-00	6G8-13440-00

MOTORES / ENGINES / MOTORI

F8
F/FT 9.9

Ref.	R.O.
REC35-80365M	646-24251-02

MOTORES / ENGINES / MOTORI

L150
L200
225
175
250
115
130

Ref.	R.O.
REC35-822626A15	69J-13440-00

MOTORES / ENGINES / MOTORI

F150 (2004-06)
F200
F225 (2002-06)
F250 (2005-06)

Ref.	R.O.
REC5GH-13440-00	5GH-13440-00

MOTORES / ENGINES / MOTORI

F15 (2000-05)
F
T25 (2000-05)
F40 (2000-05)
F50 (2000-05)
F60 (2002-05)
T6 (2003-05)
F75 (2003-05)
F80 (2000-03)
F90 (2003-05)
F100 (2000-02)
LF115 (2000-05)

Ref.	R.O.	Rosca Tread Passo
RECN26-13440-00	N26-13440-00	3/4" x 16NNPT

MOTORES / ENGINES / MOTORI

F300
F350

Ref.	R.O.
REC3FV-13440-00	REC3FV-13440-00

MOTORES / ENGINES / MOTORI

F15 (98-1999)
F40 (99-2001)
F25 (98-1999)
FT50 (95-1999)
F80 (1999+)
F100 (99-2000)

MODELO MODEL MODELLO	AÑO YEAR ANNO	R.O. Replaces	Ref.
F9.9 T9.9	2006-2013	5GH-13440-00	**REC5GH-13440-00**
F8B T9.9	1990-2005	6G8-13440-00	**REC6G8-13440-00**
F15	1998-1999	3FV-13440-00	**REC3FV-13440-00**
F13,5 F15	2000-2013	5GH-13440-00	**REC5GH-13440-00**
F20 F25	1998-1999	3FV-13440-00	**REC3FV-13440-00**
F25 T25	2000-2013	5GH-13440-00	**REC5GH-13440-00**
F30	2001-2013	5GH-13440-00	**REC5GH-13440-00**
F40	1990-2000	3FV-13440-00	**REC3FV-13440-00**
F40 F45A	2001-2013	5GH-13440-00	**REC5GH-13440-00**
F50 T50	1995-1999	3FV-13440-00	**REC3FV-13440-00**
F50 T50	2000-2005	5GH-13440-00	**REC5GH-13440-00**
F60 T60	2002-2005	5GH-13440-00	**REC5GH-13440-00**
F70 F75 F90	2003-2013	5GH-13440-00	**REC5GH-13440-00**
F80 F100	1999	3FV-13440-00	**REC3FV-13440-00**
F80	2000-2013	5GH-13440-00	**REC5GH-13440-00**
F100	2000-2003	5GH-13440-00	**REC5GH-13440-00**
F115	2001-2013	5GH-13440-00	**REC5GH-13440-00**
F150	2004-2006	69J-13440-00	**REC35-822626Q15**
F200 F225	2002-2006	69J-13440-00	**REC35-822626Q15**
F250	2005-2006	69J-13440-00	**REC35-822626Q15**
F300 F350	2008-UP	N26-13440-00	**RECN26-13440-00**
WAVERUNNERS			
FX40 FX140		5GH-13440-00	**REC5GH-13440-00**
FXCRUISER		5GH-13440-00	**REC5GH-13440-00**

ÁNODOS / ANODES / ANODI

KIT ANODOS PARA FUERABORDAS
KIT ANODES FOR OUTBOARDS
KIT ANODI PER FUORIBORDO

Ref.	
CMY150KITA	Aluminio / Aluminium / Alluminio
CMY150KITM	Magnesio / Magnesium / Magnesio
CMY150CRKITA	Aluminio / Aluminium / Alluminio
CMY150CRKITM	Magnesio / Magnesium / Magnesio

MOTORES / ENGINES / MOTORI
150-200 HP

CMY150KITA, CMY150KITM

CMY150CRKITA, CMY150CRKITM
Contrarrotación
Counter rotation
Contro-rotante

Ref.	
CMY200250KITA	Aluminio / Aluminium / Alluminio
CMY200250KITM	Magnesio / Magnesium / Magnesio

MOTORES / ENGINES / MOTORI
200-250 HP

Ref.	
CMY200300KITA	Aluminio / Aluminium / Alluminio
CMY200300KITM	Magnesio / Magnesium / Magnesio

MOTORES / ENGINES / MOTORI
200-300 HP

ANODOS / ANODES / ANODI

Ref.	R.O.		Peso Weight Peso
CM15026	6E5-11325-00	Cinc / Zinc / Zinco	0,010 kg
CM15026A	6E5-11325-00	Aluminio / Aluminium / Alluminio	0,005 kg

MOTORES / ENGINES / MOTORI
100 - 225 HP

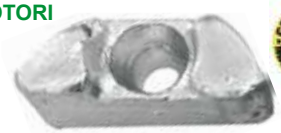

Ref.	R.O.		Peso Weight Peso
CM6U4-45251-00		Cinc / Zinc / Zinco	0,27 kg

MOTORES / ENGINES / MOTORI
Serie TD

Ref.	R.O.		Peso Weight Peso
CM6G5-45251-01	6G5-45251-01	Cinc / Zinc / Zinco	0,91 kg
CM6G5-45251-01A	6G5-45251-01	Aluminio / Aluminium / Alluminio	0,37 kg

MOTORES / ENGINES / MOTORI
Serie MALTA 2/4, 3.5 HP
2B/3, A/4, A/5C, 150/200 HP

Ref.	R.O.		Peso Weight Peso
CM6H1-45251-02	6H14525102	Cinc / Zinc / Zinco	0,49 kg
CM6H1-45251-02A	6H14525102	Aluminio / Aluminium / Alluminio	0,20 kg

MOTORES / ENGINES / MOTORI
Serie TOP 700

Ref.	R.O.		Peso Weight Peso
CM68V-11325-01	68V-11325-01	Cinc / Zinc / Zinco	0,07 kg
CM68V-11325-01A	68V-11325-01	Aluminio / Aluminium / Alluminio	0,03 kg

Ref.	R.O.		Peso Weight Peso
CM68T-45251-00	68T-45251-00	Cinc / Zinc / Zinco	0,10 kg
CM68T-45251-00A	68T-45251-00	Aluminio / Aluminium / Alluminio	0,04 kg

Ref.	R.O.		Peso Weight Peso
CM6E5-45251-00		Cinc / Zinc / Zinco	0,10 kg
CM6E5-45251-00A		Aluminio / Aluminium / Alluminio	0,05 kg

Ref.	R.O.		Peso Weight Peso
CM6E0-45251-11	6EO-45251-11-00	Cinc / Zinc / Zinco	0,10 kg
CM6E0-45251-11A	6EO-45251-11-00	Aluminio / Aluminium / Alluminio	0,04 kg

MOTORES / ENGINES / MOTORI
40 HP

Ref.	R.O.		Peso Weight Peso
CM67C-45251-00	67C-45251-00	Cinc / Zinc / Zinco	0,12 kg

MOTORES / ENGINES / MOTORI
Fuerabordas / Outboards /

Ref.	R.O.		Peso Weight Peso
CM3082523	689-11325-00	Cinc / Zinc / Zinco	0,03 kg

Ref.	R.O.		Peso Weight Peso
CM41106-ZW000		Cinc / Zinc / Zinco	0,03 kg

MOTORES / ENGINES / MOTORI
2-25 HP

Ref.	R.O.		Peso Weight Peso
CM688-45251-01	688-45251-01	Cinc / Zinc / Zinco	0,03 kg
CM688-45251-01A	688-45251-01	Aluminio / Aluminium / Alluminio	0,01 kg

MOTORES / ENGINES / MOTORI
Serie 2-115
60, 85,115

Ref.	R.O.		Peso Weight Peso
CM6H1-45251-01	6H1-45251-01	Cinc / Zinc / Zinco	0,56 kg

Ref.	R.O.		Peso Weight Peso
CM825171		Cinc / Zinc / Zinco	0,29 kg

MOTORES / ENGINES / MOTORI
30-40 HP

Ref.	R.O.		Peso Weight Peso
CM62Y-11325-00	62Y-11325-00	Cinc / Zinc / Zinco	0,02 kg

MOTORES / ENGINES / MOTORI
40-200 HP

Ref.	R.O.		Peso Weight Peso
CM6L5-45251-02	6L5-45251-02	Cinc / Zinc / Zinco	0,06 kg
CM6L5-45251-02A	6L5-45251-02	Aluminio / Aluminium / Alluminio	0,03 kg

MOTORES / ENGINES / MOTORI
3,5 HP

Ref.	R.O.		Peso Weight Peso
CM6G1-45251-03	6G1-45251-03	Cinc / Zinc / Zinco	0,17 kg

MOTORES / ENGINES / MOTORI
6C - 6D - 8C

Ref.	R.O.		Peso Weight Peso
CM42121		Cinc / Zinc / Zinco	0,03 kg

MOTORES / ENGINES / MOTORI
6 - 9.9 HP

Ref.	R.O.		Peso Weight Peso
CM6E8-45251-00	6E8-45251-00	Cinc / Zinc / Zinco	0,06 kg

MOTORES / ENGINES / MOTORI
9.9 HP

Ref.	R.O.		Peso Weight Peso
CM6E8-45251-01	6E8-45251-02	Cinc / Zinc / Zinco	0,15 kg

MOTORES / ENGINES / MOTORI
9.9 - 15 HP

Ref.	R.O.		Peso Weight Peso
CM6G8-45251-01	6G8-45251-00	Cinc / Zinc / Zinco	0,20 kg

MOTORES / ENGINES / MOTORI
9.9 HP

Ref.	R.O.		Peso Weight Peso
CM66M-45371-00	66M-45371-00	Cinc / Zinc / Zinco	0,08 kg

MOTORES / ENGINES / MOTORI
9.9 HP - 4T

Ref.	R.O.		Peso Weight Peso
CM6G1-45251-02	6G1-45251-02	Cinc / Zinc / Zinco	0,03 kg

MOTORES / ENGINES / MOTORI
6 - 8 HP

Ref.	R.O.		Peso Weight Peso
CM6U0-45251-00	6UO-45251-00	Cinc / Zinc / Zinco	1,50 kg

MOTORES / ENGINES / MOTORI
Fuerabordas / Outboards / Fuoribordo

YAMAHA

RECAMBIOS MARINOS S.L.

Ref.	R.O.		Peso Weight Peso
CM6T4-45836-00	6T4-45836-00	Cinc / Zinc / Zinco	1,44 kg

MOTORES / ENGINES / MOTORI
V8

Ref.	R.O.		Peso Weight Peso
CM6T5-45373-00	6T545373-00	Cinc / Zinc / Zinco	1,07 kg

MOTORES / ENGINES / MOTORI
130 - 260 HP

Ref.	R.O.		Peso Weight Peso
CM15008	66M-11325-00	Cinc / Zinc / Zinco	0,014 kg
CM15008A	66M-11325-00	Aluminio / Aluminium / Alluminio	0,006 kg

MOTORES / ENGINES / MOTORI
9.9 HP

Ref.	R.O.		Peso Weight Peso
CM67F-11325-00	67F-11325-00	Cinc / Zinc / Zinco	0,06 kg

MOTORES / ENGINES / MOTORI
80 - 100 HP

Ref.	R.O.		Peso Weight Peso
CM63D-45251-01	63D-45251-01	Cinc / Zinc / Zinco	0,54 kg

Ref.	R.O.		Peso Weight Peso
CM67C-45371-00	67C-45371-00	Cinc / Zinc / Zinco	0,21 kg

MOTORES / ENGINES / MOTORI
F25 - F40 - F50 - F60

Ref.	R.O.		Peso Weight Peso
CM6E5-45371-10	6E5-45371-10	Cinc / Zinc / Zinco	0,23 kg

MOTORES / ENGINES / MOTORI
60 - 225 HP

Ref.	R.O.		Peso Weight Peso
CM6G8-11325-00	6G8-11325-00	Cinc / Zinc / Zinco	0,02 kg

MOTORES / ENGINES / MOTORI
2.5 - 9.0 HP

Ref.	R.O.		Peso Weight Peso
CM85007	688-11325-00	Cinc / Zinc / Zinco	0,010 kg
CM85007A	688-11325-00	Aluminio / Aluminium / Alluminio	0,004 kg

MOTORES / ENGINES / MOTORI
25 - 90 HP

Ref.	R.O.		Peso Weight Peso
CM61A-45371	61A-45371-00	Cinc / Zinc / Zinco	0,63 kg
CM61A-45371-00A	61A-45371-00	Aluminio / Aluminium / Alluminio	0,25 kg

MOTORES / ENGINES / MOTORI
250A

Ref.	R.O.		Peso Weight Peso
CM61N-45251-01	61N-45251-01	Cinc / Zinc / Zinco	0,26 kg
CM61N-45251-01A	61N-45251-01	Aluminio / Aluminium / Alluminio	0,10 kg

MOTORES / ENGINES / MOTORI
4T, 9.9,/15F, 25HP

Ref.	R.O.		Peso Weight Peso
CM664-45371-01	664-45371-01A	Cinc / Zinc / Zinco	0,28 kg
CM664-45371-01A	664-45371-01A	Aluminio / Aluminium / Alluminio	0,11 kg

MOTORES / ENGINES / MOTORI
20, 25, 30 HP

Ref.	R.O.		Peso Weight Peso
CM82795M		Cinc / Zinc / Zinco	0,19 kg
CM82795MA		Aluminio / Aluminium / Alluminio	0,07 kg

MOTORES / ENGINES / MOTORI
25, 30 HP

Ref.	R.O.		Peso Weight Peso
CM688-45371-02	688-45371-02	Cinc / Zinc / Zinco	0,48 kg
CM688-45371-02A	688-45371-02	Aluminio / Aluminium / Alluminio	0,19 kg

MOTORES / ENGINES / MOTORI
60, 90 HP

Ref.	R.O.		Peso Weight Peso
CM679-45251-00	679-45251-00	Cinc / Zinc / Zinco	0,56 kg

MOTORES / ENGINES / MOTORI
55 HP

Ref.	R.O.		Peso Weight Peso
CM6J9-45371-01	6J9-45371-01	Cinc / Zinc / Zinco	0,50 kg
CM6J9-45371-01A	6J9-45371-01	Aluminio / Aluminium / Alluminio	0,20 kg

MOTORES / ENGINES / MOTORI
150, 200 HP

Ref.	R.O.		Peso Weight Peso
CM6K1-45371-02	6J9-45371-02	Cinc / Zinc / Zinco	0,50 kg
CM6K1-45371-02A	6J9-45371-02	Aluminio / Aluminium / Alluminio	0,21 kg

MOTORES / ENGINES / MOTORI
150, 200 HP
Contra-rotación
Counter rotation
Contro-rotante

Ref.	R.O.		Peso Weight Peso
CM69L-45371-00	69L-45371-00	Cinc / Zinc / Zinco	0,52 kg
CM69L-45371-00A	69L-45371-00	Aluminio / Aluminium / Alluminio	0,21 kg

Ref.	R.O.		Peso Weight Peso
CM6T5-45371-00	6T5-45371-00	Cinc / Zinc / Zinco	0,52 kg

MOTORES / ENGINES / MOTORI
130, 160 HP

Ref.	R.O.		Peso Weight Peso
CM6E5-45371-01	6E5-45371-01	Cinc / Zinc / Zinco	0,42 kg
CM6E5-45371-01A	6E5-45371-01	Aluminio / Aluminium / Alluminio	0,17 kg

MOTORES / ENGINES / MOTORI
115 - 225 HP (V-4 - V6)

Ref.	R.O.		Peso Weight Peso
CM6K1-45371-00	6K1-45371-00	Cinc / Zinc / Zinco	0,42 kg
CM6K1-45371-00A	6K1-45371-00	Aluminio / Aluminium / Alluminio	0,17 kg

MOTORES / ENGINES / MOTORI
115 - 225 HP (V-4 - V6)
Contra-rotación
Counter rotation
Contro-rotante

Ref.	R.O.		Peso Weight Peso
TEN01109		Cinc / Zinc / Zinco	0,020 kg

MOTORES / ENGINES / MOTORI
Serie 2 - 115 HP
Mariner / Yamaha 2 - 25 HP

Ref.	R.O.		Peso Weight Peso
TEN01110	688-45251-01	Cinc / Zinc / Zinco	0,040 kg

MOTORES / ENGINES / MOTORI
Serie 2 - 115 HP
Yamaha 60 - 85 - 115 HP

Ref.	R.O.		Peso Weight Peso
TEN01111		Cinc / Zinc / Zinco	0,210 kg

MOTORES / ENGINES / MOTORI
Serie 2 - 115 HP
Mariner 40 HP
Yamaha 70 - 85 HP

Ref.	R.O.		Peso Weight Peso
TEN01127	676-45251-00	Ø 20 mm	0,020 kg
TEN01128	823913	Ø 24 mm	0,020 kg

MOTORES / ENGINES / MOTORI
Ánodo motor.
Anode for engine.
Anodo motore.

Ref.	R.O.		Peso Weight Peso
TEN01165	63P-11325-21-00	Cinc / Zinc / Zinco	0,030 kg

Ref.	R.O.		Peso Weight Peso
TEN01148	6G8-11325-00	Cinc / Zinc / Zinco	0,010 kg

MOTORES / ENGINES / MOTORI
Serie 2,5 - 9,0 HP

Ref.	R.O.		Peso Weight Peso
TEN01161	6BL-11325-00	Cinc / Zinc / Zinco	0,020 kg

MOTORES / ENGINES / MOTORI
Ánodo motor.
Anode for engine.
Anodo motore.

Ref.	R.O.		Peso Weight Peso
TEN01163	6BT-11325-00	Cinc / Zinc / Zinco	0,020 kg

MOTORES / ENGINES / MOTORI
Ánodo motor.
Anode for engine.
Anodo motore.

Ref.	R.O.		Peso Weight Peso
TEN01149	62Y-11325-00	Cinc / Zinc / Zinco	0,020 kg

MOTORES / ENGINES / MOTORI
Serie 40 - 200 HP

Ref.	R.O.		Peso Weight Peso
TEN01150	6J8-11325-00	Cinc / Zinc / Zinco	0,020 kg

MOTORES / ENGINES / MOTORI
Serie 20 - 25 HP

Ref.	R.O.		Peso Weight Peso
TEN01168	61A-11325-00	Cinc / Zinc / Zinco	0,020 kg

Ref.	R.O.		Peso Weight Peso
TEN01112	6G5-45251-01	Cinc / Zinc / Zinco	0,900 kg
	6G5-45251-02		

MOTORES / ENGINES / MOTORI
Ánodo barra motor.
Anode bar for engine.
Anodo barra motore.

Ref.	R.O.		Peso Weight Peso
TEN01112-1	6AW-45251	Cinc / Zinc / Zinco	0,650 kg

MOTORES / ENGINES / MOTORI
Ánodo barra motor.
Anode bar for engine.
Anodo barra motore.

Ref.	R.O.		Peso Weight Peso
TEN01113	6H1-45251-01	Cinc / Zinc / Zinco	0,550 kg

MOTORES / ENGINES / MOTORI
Serie Yamaha 60 - 90 HP
Ánodo barra motor.
Anode bar for engine.
Anodo barra motore.

Ref.	R.O.		Peso Weight Peso
TEN01115	6H1-45251-03	Cinc / Zinc / Zinco	0,460 kg

MOTORES / ENGINES / MOTORI
Serie Yamaha TOP 700
Ánodo barra motor.
Anode bar for engine.
Anodo barra motore.

Ref.	R.O.		Peso Weight Peso
TEN01125	6H1-45251-03	Cinc / Zinc / Zinco	1,200 kg

MOTORES / ENGINES / MOTORI
Serie 150 - 200 HP
Ánodo barra motor.
Anode bar for engine.
Anodo barra motore.

Ref.	R.O.		Peso Weight Peso
TEN01126		Cinc / Zinc / Zinco	0,290 kg

MOTORES / ENGINES / MOTORI
Serie 30 - 40 HP
Ánodo barra motor.
Anode bar for engine.
Anodo barra motore.

Ref.	R.O.		Peso Weight Peso
TEN01120	6T5-45373-00-00	Cinc / Zinc / Zinco	0,770 kg

MOTORES / ENGINES / MOTORI
Serie Yamaha 130 - 205, 230 - 260
Ánodo motor.
Anode for engine.
Anodo motore.

Ref.	R.O.		Peso Weight Peso
TEN01159	6U4-45251-00	Cinc / Zinc / Zinco	0,600 kg

MOTORES / ENGINES / MOTORI
Ánodo barra motor.
Anode bar for engine.
Anodo barra motore.

Ref.	R.O.		Peso Weight Peso
TEN01121	689-11325-00	Cinc / Zinc / Zinco	0,020 kg

MOTORES / ENGINES / MOTORI
Serie Yamaha W30 - W8 25/2/3
Ánodo motor.
Anode for engine.
Anodo motore.

Ref.	R.O.		Peso Weight Peso
TEN01132	67C-45251-00	Cinc / Zinc / Zinco	0,120 kg

Ref.	R.O.		Peso Weight Peso
TEN01142	68T-45251-00	Cinc / Zinc / Zinco	0,100 kg

MOTORES / ENGINES / MOTORI
Serie Yamaha F8C - 68T 2000 - 4

Ref.	R.O.		Peso Weight Peso
TEN01147	688-11325-00	Cinc / Zinc / Zinco	0,010 kg

MOTORES / ENGINES / MOTORI
Serie 25 - 90 HP

Ref.	R.O.		Peso Weight Peso
TEN01152	6E5-11325-00	Cinc / Zinc / Zinco	0,010 kg

MOTORES / ENGINES / MOTORI
Serie 100 - 225 HP

Ref.	R.O.		Peso Weight Peso
TEN01162	682-11325-00	Cinc / Zinc / Zinco	0,020 kg

MOTORES / ENGINES / MOTORI
Ánodo motor.
Anode for engine.
Anodo motore.

Ref.	R.O.		Peso Weight Peso
TEN01164	63P-11325-11-00	Cinc / Zinc / Zinco	0,020 kg

MOTORES / ENGINES / MOTORI
Ánodo motor.
Anode for engine.
Anodo motore.

Ref.	R.O.		Peso Weight Peso
TEN01166	676-11325-00	Cinc / Zinc / Zinco	0,030 kg

MOTORES / ENGINES / MOTORI
Ánodo motor.
Anode for engine.
Anodo motore.

Ref.	R.O.		Peso Weight Peso
TEN01167	63P-11325-01-00	Cinc / Zinc / Zinco	0,020 kg

MOTORES / ENGINES / MOTORI
Ánodo motor.
Anode for engine.
Anodo motore.

Ref.	R.O.		Peso Weight Peso
TEN01160T	N51-11325-01	Cinc / Zinc / Zinco	0,020 kg

MOTORES / ENGINES / MOTORI
Ánodo motor.
Anode for engine.
Anodo motore.

Ref.	R.O.		Peso Weight Peso
TEN01146	67F-11325-00	Cinc / Zinc / Zinco	0,070 kg

MOTORES / ENGINES / MOTORI
Serie 80 - 100 HP

Ref.	R.O.		Peso Weight Peso
TEN01146-1	67F-11325-00	Cinc / Zinc / Zinco	0,050 kg

MOTORES / ENGINES / MOTORI
Serie 80 - 100 HP

Ref.	R.O.		Peso Weight Peso
TEN01151	66M-11325-00	Cinc / Zinc / Zinco	0,010 kg

MOTORES / ENGINES / MOTORI
Serie 9,9 HP

Ref.	R.O.		Peso Weight Peso
TEN01156	68V-11325-02	Cinc / Zinc / Zinco	0,030 kg

MOTORES / ENGINES / MOTORI
Ánodo motor.
Anode for engine.
Anodo motore.

Ref.	R.O.		Peso Weight Peso
TEN01156-1	68V-11325-01	Cinc / Zinc / Zinco	0,030 kg

MOTORES / ENGINES / MOTORI
Ánodo motor.
Anode for engine.
Anodo motore.

Ref.	R.O.		Peso Weight Peso
TEN01114		Cinc / Zinc / Zinco	0,090 kg

MOTORES / ENGINES / MOTORI
Ánodo motor.
Anode for engine.
Anodo motore.

Ref.	R.O.		Peso Weight Peso
TEN01131	63D-45251-00	Cinc / Zinc / Zinco	0,570 kg
	63D-45251-01		

MOTORES / ENGINES / MOTORI
Serie H.C. 48
Ánodo platina motor.
Anode plate for engine.
Anodo piastra motore.

Ref.	R.O.		Peso Weight Peso
TEN01135	61N-45251-01	Cinc / Zinc / Zinco	0,270kg

MOTORES / ENGINES / MOTORI
Serie 4T - 9,9 - 15F - 25 HP

Ref.	R.O.		Peso Weight Peso
TEN01137	6G8-45251-00	Cinc / Zinc / Zinco	0,200 kg

MOTORES / ENGINES / MOTORI
Serie 9,9 HP

Ref.	R.O.		Peso Weight Peso
TEN01138	6G8-45251-00	Cinc / Zinc / Zinco	0,280 kg

MOTORES / ENGINES / MOTORI
Serie Yamaha TD

Ref.	R.O.		Peso Weight Peso
TEN01123	6E0-45251-11-00	Cinc / Zinc / Zinco	0,100 kg
	65W-45251-00		

MOTORES / ENGINES / MOTORI
Serie Yamaha 40 HP

Ref.	R.O.		Peso Weight Peso
TEN01139	6T5-45251-00	Cinc / Zinc / Zinco	0,350 kg

MOTORES / ENGINES / MOTORI
Ánodo motor.
Anode for engine.
Anodo motore.

Ref.	R.O.		Peso Weight Peso
TEN01154AL	6AH-45251	Aluminio / Aluminium / Alluminio	0,690 kg

MOTORES / ENGINES / MOTORI
Ánodo platina motor.
Anode plate for engine.
Anodo piastra motore.

Ref.	R.O.		Peso Weight Peso
TEN01105	6E5-45251	Cinc / Zinc / Zinco	0,150 kg

MOTORES / ENGINES / MOTORI
Serie Yamaha 115 - 225 HP

Ref.	R.O.		Peso Weight Peso
TEN01129	6E5-45251	Cinc / Zinc / Zinco	0,240 kg

MOTORES / ENGINES / MOTORI
Serie 75 HP - XR6
Ánodo platina motor.
Anode plate for engine.
Anodo piastra motore.

Ref.	R.O.		Peso Weight Peso
TEN01157	6U0-45251-00	Cinc / Zinc / Zinco	1,500 kg

MOTORES / ENGINES / MOTORI
Serie Yamaha TD
Ánodo platina motor.
Anode plate for engine.
Anodo piastra motore.

Ref.	R.O.		Peso Weight Peso
TEN01106	6E8-45251-00	Cinc / Zinc / Zinco	0,45g

MOTORES / ENGINES / MOTORI
Serie Yamaha 9,9 HP

Ref.	R.O.		Peso Weight Peso
TEN01107		Cinc / Zinc / Zinco	0,030 kg

MOTORES / ENGINES / MOTORI
Serie Yamaha 9,9 HP
Ánodo platina motor.
Anode plate for engine.
Anodo piastra motore.

Ref.	R.O.		Peso Weight Peso
TEN01155AL	6AH-45251	Aluminio / Aluminium / Alluminio	1,050 kg

MOTORES / ENGINES / MOTORI
Ánodo platina motor.
Anode plate for engine.
Anodo piastra motore.

Ref.	R.O.		Peso Weight Peso
TEN01116	6E8-45251-02	Cinc / Zinc / Zinco	0,140 kg

MOTORES / ENGINES / MOTORI
Serie Yamaha 9,9 - 15 HP

Ref.	R.O.		Peso Weight Peso
TEN01144	6K1-45371-00	Cinc / Zinc / Zinco	0,410 kg

MOTORES / ENGINES / MOTORI
Ánodo Cola
Skeg Anode
Anodo Pinna

Ref.	R.O.		Peso Weight Peso
TEN01145	69L-45371-00	Cinc / Zinc / Zinco	0,660 kg

MOTORES / ENGINES / MOTORI
Ánodo Cola
Skeg Anode
Anodo Pinna

Ref.	R.O.		Peso Weight Peso
TEN01136	66M-45371-00	Cinc / Zinc / Zinco	0,090 kg

MOTORES / ENGINES / MOTORI
Serie 9,9 HP 4T

Ref.	R.O.		Peso Weight Peso
TEN01153	6E5-45371-00	Cinc / Zinc / Zinco	0,337 kg

MOTORES / ENGINES / MOTORI
Serie 60 - 225 HP

Ref.	R.O.		Peso Weight Peso
TEN01169	6AW-45619-00	Cinc / Zinc / Zinco	0,300 kg

MOTORES / ENGINES / MOTORI
Ánodo platina motor.
Anode plate for engine.
Anodo piastra motore.

Ref.	R.O.		Peso Weight Peso
TEN01158	6U4-45373-00	Cinc / Zinc / Zinco	0,330 kg

MOTORES / ENGINES / MOTORI
Ánodo platina motor.
Anode plate for engine.
Anodo piastra motore.

Ref.	R.O.		Peso Weight Peso
TEN01108	6G1-45251-02	Cinc / Zinc / Zinco	0,040 kg

MOTORES / ENGINES / MOTORI
Serie Yamaha 6 - 8 HP
Ánodo platina motor.
Anode plate for engine.
Anodo piastra motore.

Ref.	R.O.		Peso Weight Peso
TEN01117	6L5-45251-02	Cinc / Zinc / Zinco	0,070 kg

MOTORES / ENGINES / MOTORI
Serie Yamaha Malta 3,5 HP
+ 2B - 3A - 4A - 5C
Ánodo platina motor.
Anode plate for engine.
Anodo piastra motore.

Ref.	R.O.		Peso Weight Peso
TEN01118	6G1-45251-03	Cinc / Zinc / Zinco	0,175 kg

MOTORES / ENGINES / MOTORI
Serie Yamaha 6C - 6D - 8C HP

Ref.	R.O.		Peso Weight Peso
TEN01122	6T4-45836-00	Cinc / Zinc / Zinco	1,490 kg

MOTORES / ENGINES / MOTORI
Serie Yamaha V8

Ref.	R.O.		Peso Weight Peso
TEN01100	664-45371-01A	Cinc / Zinc / Zinco	0,210 kg

MOTORES / ENGINES / MOTORI
Serie Mariner 10 - 50 HP
Yamaha 20 - 25 - 30 HP

Ref.	R.O.		Peso Weight Peso
TEN01101	664-45371-01A	Cinc / Zinc / Zinco	0,460 kg

MOTORES / ENGINES / MOTORI
Serie Mariner 40 - 60 HP 10x1,25
Mariner 40 - 60 HP 7/16" 1991+
Yamaha 55 HP 10x1,25

Ref.	R.O.		Peso Weight Peso
TEN01102		Cinc / Zinc / Zinco	0,620 kg

MOTORES / ENGINES / MOTORI
Serie Mariner 90-140 HP

Ref.	R.O.		Peso Weight Peso
TEN01103	6E5-45371-01	Cinc / Zinc / Zinco	0,390 kg

MOTORES / ENGINES / MOTORI
Serie Yamaha 115 - 225 HP
V4 - V6

Ref.	R.O.		Peso Weight Peso
TEN01104	688-45371-02	Cinc / Zinc / Zinco	0,430 kg

MOTORES / ENGINES / MOTORI
Serie Yamaha 60 - 90 HP

Ref.	R.O.		Peso Weight Peso
TEN01119	6T5-45371-00	Cinc / Zinc / Zinco	0,580 kg

MOTORES / ENGINES / MOTORI
Serie Yamaha 130 - 205 -
230 - 260 HP

Ref.	R.O.		Peso Weight Peso
TEN01124	61A-45371-00	Cinc / Zinc / Zinco	0,680 kg

MOTORES / ENGINES / MOTORI
Serie Yamaha 250A HP

Ref.	R.O.		Peso Weight Peso
TEN01130		Cinc / Zinc / Zinco	0,270 kg

MOTORES / ENGINES / MOTORI
Serie Yamaha 25 - 30 HP

Ref.	R.O.		Peso Weight Peso
TEN01133	DX220	6J9-45371-01	0,630 kg
TEN01134	SX220	6K1-45371-02	0,630 kg

MOTORES / ENGINES / MOTORI
Yamaha 150 - 200 HP

Ref.	R.O.		Peso Weight Peso
TEN01140	67F-45371-00	Cinc / Zinc / Zinco	0,400 kg

MOTORES / ENGINES / MOTORI
Serie 80 - 100 HP 4T

Ref.	R.O.		Peso Weight Peso
TEN01141	67C-45371-00	Cinc / Zinc / Zinco	0,220 kg

MOTORES / ENGINES / MOTORI
Yamaha F40 - F50 - F60 4T

Ref.	R.O.		Peso Weight Peso
TEN01143	6J9-45371-00	Cinc / Zinc / Zinco	0,560 kg

MOTORES / ENGINES / MOTORI
Yamaha 150 - 225 HP

MOTORES DE ARRANQUE
STARTERS
MOTORINI AVVIAMENTO

Ref.	R.O.	Tiempos Strokes Tempi
PH130-0061	6L2-81800-11/20, 682-81800-11/12	2

MOTORES / ENGINES / MOTORI

9.9-15HP (1984-97)
25HP (1988-98)
6HP (1984-90)
8HP (1984-90)

Ref.	R.O.	Tiempos Strokes Tempi
PH130-0049	689-81800-13/12/11	2

MOTORES / ENGINES / MOTORI

25-40HP - 30HP/20HP

Ref.	R.O.	Tiempos Strokes Tempi
PH130-0062	6J4-81800-01/00	2

MOTORES / ENGINES / MOTORI

30 HP (1987+)
40-50 HP (1989+)

Ref.	R.O.	Tiempos Strokes Tempi
PH130-0084	66T-81800-03/02	2

MOTORES / ENGINES / MOTORI

40 HP

Ref.	R.O.	Tiempos Strokes Tempi
PH130-0005	6CJ-81800-00, 6E5-81800-12/11	2, 4

MOTORES / ENGINES / MOTORI

40-50 HP
115-130HP V4
150-175-200HP V6

Ref.	R.O.	Tiempos Strokes Tempi
PH130-0063	6H4-81800-12 /11/10	2

MOTORES / ENGINES / MOTORI

40-50 HP (1984-1988)

Ref.	R.O.	Tiempos Strokes Tempi
PH130-0051	99999-03938-00, 6N7-81800-00/01/10	2

MOTORES / ENGINES / MOTORI

115-250HP V4

Ref.	R.O.	Tiempos Strokes Tempi
PH130-0059	69W-81800-00, 69L-81800-00	2, 4

MOTORES / ENGINES / MOTORI

V200 (1998+)
F40 (2002-06)
F50 (2003-14)
F60 (2003-07)
225 HWP (1994+)
250 HP (1990+)

Ref.	R.O.	Tiempos Strokes Tempi
PH130-0050	6H3-81800-11/10	2

MOTORES / ENGINES / MOTORI

9 Dientes / 9 Teeth / 9 Denti
50HP (1993-14)
60HP (1991+)
70HP (1984-14)

Ref.	R.O.	Tiempos Strokes Tempi
PH130-0007	99999-03249-00, 697-81800-10/12/13	2

MOTORES / ENGINES / MOTORI

55-60HP 2 CIL

Ref.	R.O.	Tiempos Strokes Tempi
PH130-0058	688-81800-12	2

MOTORES / ENGINES / MOTORI

75 HP (1994-99)
85 HP (1991-96)
90 HP (1984-14)
85HP (1992-03)
80HP (1993-02)

Ref.	R.O.	Tiempos Strokes Tempi
PH130-0056	68F-81800-03/02/01/00	2

MOTORES / ENGINES / MOTORI

LZ 150-175 HP (2000+)
VZ 150-175 HP (2000+)
Z 150-175 HP (2000+)
LZ 200-Z200 HP (2000+)

Ref.	R.O.	Tiempos Strokes Tempi
PH130-0034	66M-81800-01/02	4

MOTORES / ENGINES / MOTORI

F9.9
F13.5
F15 HP (2000-08)

Ref.	R.O.	Tiempos Strokes Tempi
REC6AH-81800-00	6AH-81800-00	4

MOTORES / ENGINES / MOTORI

F13,5 ALL (2007-09)
F15 (2007-14)
F20 ALL (2007-14)

YAMAHA

RECAMBIOS MARINOS S.L.

Ref.	R.O.	Tiempos Strokes Tempi
PH130-0029	65W-81800-01/02/03, 67C-81800-02	4

MOTORES / ENGINES / MOTORI

F20
F25HP (1999-09)
F30/F40 (2005-09)

Ref.	R.O.	Tiempos Strokes Tempi
REC6BG-81800-00	6BG-81800-00	4

MOTORES / ENGINES / MOTORI

FT 25 FET (2009-13)
F40 FET
FED
FEHD (2009-13)
T25A (2009-13)
F25 DE
DMH
MH (2009-13)
F30 BET
BEHD (2009-13)
F20 DET (2011-13)

Ref.	R.O.	Tiempos Strokes Tempi
PH130-0057	68V-81800-02/01/00	4

MOTORES / ENGINES / MOTORI

F80 (2005+)
F100 (2005+)
F115 (2000+)
LF115 (2000+)

Ref.	R.O.	Tiempos Strokes Tempi
PH130-0055	67F-81800-00/01/02/03	4

MOTORES / ENGINES / MOTORI

F80 HP (1999+)
F100 HP (1999+)

Ref.	R.O.	Tiempos Strokes Tempi
PH130-0073	63P-81800-00, 6BR-81800-00	4

MOTORES / ENGINES / MOTORI

FL, F150 AET, X, L (2009-11)
FL, F200 CETX (2009-11)
FL, F225 BET
X, U, CET, L (2009-11)
FL, F250 AET, X, U, BET, X, U (2009-11)

Ref.	R.O.	Tiempos Strokes Tempi
PH130-0074	69J-81800-00	4

MOTORES / ENGINES / MOTORI

F200, F225 HP (2002-2007)

Ref.	R.O.	Tiempos Strokes Tempi
PH130-0076	60V-81800-00, 60X-81800-00	4

MOTORES / ENGINES / MOTORI

250HP (2003-07)

Ref.	R.O.	Tiempos Strokes Tempi
REC6C9-81800-00	6D0-81800-00, 6C9-81800-00	4

MOTORES / ENGINES / MOTORI

Z, ZL 300 AETO, X, U -TR, -TX R (2004-07)

Ref.	R.O.	Tiempos Strokes Tempi
REC6AW-81800-00	6AW-81800-00	4

MOTORES / ENGINES / MOTORI

L, F350 AET, X, U, Z -CB -TRG (2008-13), L, F300, AET, X, U (2008-2011)

SOLENOIDES Y RELÉS
SOLENOID AND RELAYS
SOLENOIDI E RELÉ

SOLENOIDE / SOLENOID / SOLENOIDI

Ref.	R.O.
PH375-0034	65W-81941-00

MOTORES / ENGINES / MOTORI

F20 (1998-09)
F25 (1998-09)
F30 (2001-09)
F40 (2000-09)

Ref.	R.O.
REC61A-81941-00	61A-81941-00, 6E5-81941-11

MOTORES / ENGINES / MOTORI

150
200
225
250
175
115
130
100HP

Ref.	R.O.
REC688-81950-10	688-81950-10

MOTORES / ENGINES / MOTORI

50G
50D
E60
70B
80A
90A
60F

Ref.	R.O.
PH375-0041	6G1-81941-10

MOTORES / ENGINES / MOTORI

6HP-90HP

RELÉ POWER TRIM
POWER TRIM RELAY
RELÉ POWER TRIM

Ref.	R.O.
PH375-0047	6E5-81950-01

MOTORES / ENGINES / MOTORI

175HP (1991-96)
200HP (1991-10)
225HP (1996-09)
150HP (1996-03)
115HP (1995-13)
100HP (1996-01)
130HP (1991-07)

Ref.	R.O.
PH375-0048	6E5-8195A-01

MOTORES / ENGINES / MOTORI

200HP (1991-10)
115 (1991-13)
130 (1991-07)
150 (1998-07)
175 (1996-03)
225 (1996-09)
100 (1996-01)

MOTORES TRIM Y POWERTRIM
TRIM ENGINES AND COMPLETE TRIM
MOTORINI TRIM E POWERTRIM

INSTALACIÓN ELÉCTRICA
WIRING HARNESS
ISTALLAZIONE ELETTRICA

Ref.	R.O.
PH200-WH01	

Sustituye de 2 a 3 cables.
Converts 3-wire Tilt and Trim motors to 2-Wire design
Sustituisce da 2 a 3 cavi.

TRIM COMPLETO
COMPLETE TRIM ASSEMBLY
MOTORINO TRIM COMPLETO

Ref.	R.O.
SIE18-6865	

MOTORES / ENGINES / MOTORI

3 RAM
115-225HP

Ref.	R.O.
PH200-T029	6H1-43880-02

MOTORES / ENGINES / MOTORI
Motor trim 3 tornillos - 2 cables
Trim motor 3 bolts - 2 wires
Motorino Trim 3 viti - 2 cavi

40HP (1994)
50-90HP (1992-95)
70-90 (1996)
60-70-90 (1998)
90HP (1992-02)

Ref.	R.O.
PH200-T036	62Y-43880-02, 69W-43880-01

MOTORES / ENGINES / MOTORI
Motor trim 3 tornillos - 2 cables
Trim motor 3 bolts - 2 wires
Motorino Trim 3 viti - 2 cavi

40Y (2005-07)
40V (2003)
C40 (2002)
F40 (2002)
F50
FT50 (2002-07)

Ref.	R.O.
PH200-T035	62X-43880-09

MOTORES / ENGINES / MOTORI
Motor trim 3 tornillos - 2 cables
Trim motor 3 bolts - 2 wires
Motorino Trim 3 viti - 2 cavi

40V (1995-98)
F45 (1995- 99)
50H (1995-98)
F50 (1995-99)
FT50 (1996-00)

Ref.	R.O.
PH200-T045	6C5-43880-01/00

MOTORES / ENGINES / MOTORI
Motor trim 3 tornillos - 2 cables
Trim motor 3 bolts - 2 wires
Motorino Trim 3 viti - 2 cavi

F40 (2006-10)
F60 (2006-10)
F50 (2005-10)
FT60 (2006-10)
40-50HP (1985-92)

Ref.	R.O.
PH200-T048	6H5-43880-02/09

MOTORES / ENGINES / MOTORI
40-50HP (1984-94)

Ref.	R.O.
PH200-T030	6G5-43880-01/00

MOTORES / ENGINES / MOTORI
Motor trim 3 tornillos - 2 cables
Trim motor 3 bolts - 2 wires
Motorino Trim 3 viti - 2 cavi

115-200 (1987-95)
225 (1990-94)

Ref.	R.O.
PH200-T069	69J-43880-00/01

MOTORES / ENGINES / MOTORI

F200
F225 (2002+)
F250 (2005+)
Z300

Ref.	R.O.
PH200-T037	6H1-43880-00, 688-43880-11, 6E5-43880-01/02

MOTORES / ENGINES / MOTORI
Motor trim 3 tornillos - 3 cables
Trim motor 3 bolts - 3 wires
Motorino Trim 3 viti - 3 cavi

60
70
75
80
85
90
115
150
200HP

Ref.	R.O.
PH200-T044	67F-43880-00

MOTORES / ENGINES / MOTORI

F75 (2003-04)
F80 (1999-03)
F90 (2003-04)
F100 (1999-02)

Ref.	R.O.
PH200-T057	64E-43880-00 64E-43880-01/03/04

MOTORES / ENGINES / MOTORI
Motor trim 4 tornillos - 2 cables
Trim motor 4 bolts - 2 wires
Motorino Trim 4 viti - 2 cavi

225
250HP
115
225 (1997-02)

Ref.	R.O.
PH200-T050	61A-43880-01/02, 69W-81800-00

MOTORES / ENGINES / MOTORI
Motor trim 3 tornillos - 4 cables
Trim motor 3 bolts - 4 wires
Motorino Trim 3 viti - 4 cavi

225
250HP

REGULADORES Y RECTIFICADORES
REGULATOR AND RECTIFIERS
REGOLATORI E RADDRIZZATORI

Ref.	R.O.
REC6H2-81960-10	6H2-81960-10

MOTORES / ENGINES / MOTORI

40
50
60
70

Ref.	R.O.
REC6G1-81970-62	6G1-81970-61/62

MOTORES / ENGINES / MOTORI

70HP

Ref.	R.O.
REC6G5-81960-A0	6G5-81960-A0

MOTORES / ENGINES / MOTORI

75	(1988-96)
85	1989-96)
90	(1984-91)
115	(1991-96)
130	(1988-89)
150	(1984-89)
150	(1997)
175	(1984-89)
200	(1984-89)

STARTOR
STARTOR
STARTORI

Ref.	R.O.
REC688-85510-10	688-85510-11/10

MOTORES / ENGINES / MOTORI

75	(1988-96)
85	(1989-96)
90	(1984-90)

Ref.	R.O.
REC6H1-85510-00	6H1-85510-00

MOTORES / ENGINES / MOTORI

80A
AE (1990-91)
90 AEO
AETO (1990-91)

Ref.	R.O.
REC6G5-85510-10	6G5-85510-10

MOTORES / ENGINES / MOTORI

200 (1984-89)

Ref.	R.O.
REC6E5-85510-11	6E5-85510-11/10

MOTORES / ENGINES / MOTORI

115	(1984-89), (1991-98)
130	(1988-89)
150	(1984-89)

Ref.	R.O.
PAF25-05140000	65W-85510-10

MOTORES / ENGINES / MOTORI

F20	(1998-06)
F25	(1998-09)
T25/FT25	(2000-09)
F30	(2001-09)
F40	(2000-09)

CAJAS NEGRAS
POWER PACKS
CENTRALINE

Ref.	R.O.
REC63V-85540-00-01	63V-85540-00/01

MOTORES / ENGINES / MOTORI

9.9, 15HP	(1995-08)
13, 5HP	(2003-04)

Ref.	R.O.
REC61N-85540-00	61N-85540-00

MOTORES / ENGINES / MOTORI

25	(1997-07)
30	(1996-08)
200	(1993)

Ref.	R.O.
REC6F5-85540-22	6F5-85540-22

MOTORES / ENGINES / MOTORI

E40 (2003)

Ref.	R.O.
REC695-85540-11	695-85540-11/12

MOTORES / ENGINES / MOTORI

E40	(2003)
9.9	1986-95)
15	(1986-95)
20	(1985-02)
25	(1985-02)

Ref.	R.O.
REC6G0-85540-11	6G0-85540-11

MOTORES / ENGINES / MOTORI

175 (1986-89)
200 (1986-89)
150 (1988)
225 (1987-89)

Ref.	R.O.
REC663-85540-15	663-85540-11/15

MOTORES / ENGINES / MOTORI

55 (1990-93)

Ref.	R.O.
REC6E0-85540-71	6E0-85540-71/70

MOTORES / ENGINES / MOTORI

4 (1984-03)
5 (1984-14)

Ref.	R.O.
REC689-85540-21	689-85540-21/20

MOTORES / ENGINES / MOTORI

25 (1984-87)
30 (1984-87)
30 (1989-90)
40 (1990)

Ref.	R.O.
REC696-85540-12	696-85540-12/11/10

MOTORES / ENGINES / MOTORI

6 (1984-99)
8 (1984-04)

Ref.	R.O.
REC6B4-85540-01	6B4-85540-01

MOTORES / ENGINES / MOTORI

E9.9 DMH-5 (2003)
E15 DMH -5 (2003)

Ref.	R.O.
REC6J8-85540-H2	6J8-85540-H2

MOTORES / ENGINES / MOTORI

25J/EO/SH (1999)
30D/ETOL/EOS/MHS
MHOL, E, L, H (1999+)

Ref.	R.O.
REC66T-85540-00-01	66T-85540-01

MOTORES / ENGINES / MOTORI

40X/E40X
MLH
XW (1998+)

Ref.	R.O.
REC6E5-85540-12	6E5-85540-12/11/10

MOTORES / ENGINES / MOTORI

115 (1984-89)
115 (1991-98)
130 (1988-89)

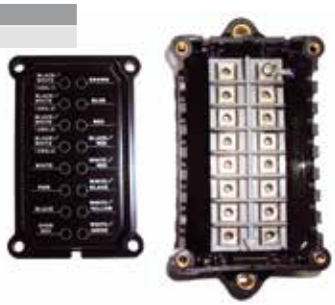

Ref.	R.O.
REC688-85540-16	688-85540-16

MOTORES / ENGINES / MOTORI

75
85

Ref.	R.O.
REC6G5-85540-12	6G5-85540-12/11/10

MOTORES / ENGINES / MOTORI

150HP (1984-89)

BOBINAS
COILS
BOBINE

Ref.	R.O.	Tiempos / Strokes / Tempi
REC63V-85520-00	63V-85520-00	2

MOTORES / ENGINES / MOTORI

15F (1995+)
9,9 F/M (1995+)
13,5 A (2003-04)

Ref.	R.O.	Tiempos / Strokes / Tempi
PAF2.6-04000600	69M-85640-00	4

MOTORES / ENGINES / MOTORI

F2.5 ALL (2003+)

Ref.	R.O.	Tiempos / Strokes / Tempi
PAF15-07000300	66M-85520-00	4

MOTORES / ENGINES / MOTORI

F15 ALL (1998-07)
F9.9 ALL (1998-08)
F13.5 ALL (2002-07)

BOBINA DE IGNICIÓN
COIL IGNITION
BOBINE INIEZIONE

Ref.	R.O.	Tiempos / Strokes / Tempi
PAF4-04000038	67D-85640-00	4

MOTORES / ENGINES / MOTORI

F4 ALL (1998+)

Ref.	R.O.	Tiempos / Strokes / Tempi
PAF25-05120000	65W-85570-01	4

MOTORES / ENGINES / MOTORI

F20A/E (1998-06)
F25A/B/T/M (1998-09)

Ref.	R.O.	Tiempos / Strokes / Tempi
REC6F5-85570-11	6F5-85570-13	4

MOTORES / ENGINES / MOTORI

F9.9 (2009+)
F20/25 B/F (2007+)
F13.5 B/M (2007+)
F15 C/M/E (2007-09)

Ref.	R.O.	Tiempos / Strokes / Tempi
PAF15-07000600	66M-85570-00	4

MOTORES / ENGINES / MOTORI

F15 ALL (1998-07)
F9.9 ALL (1998-08)
F13.5 ALL (2002-07)

Ref.	R.O.	Tiempos / Strokes / Tempi
REC689-81311-40	66M-85570-00	2

MOTORES / ENGINES / MOTORI

3A (1985-92)
40Q (1990-98)

Ref.	R.O.	Tiempos / Strokes / Tempi
REC6R3-85570-01	6R3-85570-01	2

MOTORES / ENGINES / MOTORI

200 A/E/F (1997-10)
150 F/T (1994-07)
175D (1996-03)
225D (1996-09)
130 B/T (1994-07)
115 C/T (1994-13)
130 BETO (1994-01)

Ref.	R.O.	Tiempos / Strokes / Tempi
REC697-85570-00	697-85570-00	2

MOTORES / ENGINES / MOTORI

50G/ETOL (1995-07)
75T/L/A/C/B (1997-14)
85A/E/TDL/X (1997-03)
55 B/M/ET (1995-02)
90A/T/ETOL (1997-14)
60F/T/ETOL (1995-07)
70B/E/ETOL (1995-14)

Ref.	R.O.	Tiempos / Strokes / Tempi
REC697-85570-10	697-85570-11	2

MOTORES / ENGINES / MOTORI

55HP 2 Cil. (1989-94)
90A/ETN/AETO (1984-88)
80A (1984-89)

Ref.	R.O.	Tiempos / Strokes / Tempi
REC6E5-85570-11	6E5-85570-11/10	2

MOTORES / ENGINES / MOTORI

115HP 4Cil. (1984-91)
140A/E (1984-89)
150
175
200HP (1984-89)

Ref.	R.O.	Tiempos / Strokes / Tempi
REC6E7-85570-19	6E7-85570-19-00	2

MOTORES / ENGINES / MOTORI

9.9/15HP (1988-95)
20C/D (1985-93)
25C/D (1985-93)

Ref.	R.O.	Tiempos / Strokes / Tempi
REC63V-85570-00	65E-85570-00	2

MOTORES / ENGINES / MOTORI

9,9 / 15F/M (1995-13)
13,5A (2003-04)
E15 (2003)

Ref.	R.O.	Tiempos / Strokes / Tempi
REC66T-85570-00	66T-85570-00	2

MOTORES / ENGINES / MOTORI

E40 (1998+)
40X/M (1998+)

BOBINA DE PULSACIÓN
COIL PULSER
BOBINE ACCENSIONE

Ref.	R.O.	Tiempos / Strokes / Tempi
PAF25-05110000	65W-85580-00	4

MOTORES / ENGINES / MOTORI

F25 ALL (1998-09)
F40 E
B (2000-09)
F30 A
ERZ
ML (2001-09)

Ref.	R.O.	Tiempos / Strokes / Tempi
PAF15-07000200	66M-85580-00	4

MOTORES / ENGINES / MOTORI

F15 ALL (1998-07)
F9.9 ALL (1998-08)
F13.5 ALL (2002-07)

Ref.	R.O.	Tiempos / Strokes / Tempi
PAF15-07000400	66M-85533-00	4

MOTORES / ENGINES / MOTORI

F15 ALL (1998-07)
F9.9 ALL (1998-08)
F13.5 ALL (2002-07)

Ref.	R.O.	Tiempos / Strokes / Tempi
REC63V-85580-01	63V-85580-01	2

MOTORES / ENGINES / MOTORI

9,9/15 F/M (2003+)
13,5A (2003-04)

Ref.	R.O.	Tiempos / Strokes / Tempi
REC66T-85580-00	66T-85580-00	2

MOTORES / ENGINES / MOTORI

E40 (1998+)
40X/M (1998+)

BOBINA DE CARGA
COIL CHARGER
BOBINE DI CARICA

Ref.	R.O.	Tiempos / Strokes / Tempi
REC66T-85520-00		2

MOTORES / ENGINES / MOTORI

E40 (1998+)
40X/M (1998+)

BOBINA DE LUZ
COIL LIGHTING
BOBINE LUCE

Ref.	R.O.	Tiempos / Strokes / Tempi
REC63V-85533-00	63V-85533-00	2

MOTORES / ENGINES / MOTORI

9,9/15 F/M (1995+)
13,5 AM (2003-04)
E9.9/15 (2003)

Ref.	R.O.	Tiempos / Strokes / Tempi
REC66T-85533-00	66T-85533-00	2

MOTORES / ENGINES / MOTORI

E40 (1998+)
40X/M (1998+)

DESCONECTORES DE SEGURIDAD
CUT OFF SWITCHES
CHIAVETTA DI SICUREZZA

Ref.	R.O.
REC688-82575-01	688-82575-01

Ref.	R.O.
REC69W-82575-00	69W-82575-00

Ref.	R.O.
REC66T-82575-01	66T-82575-01

MOTORES / ENGINES / MOTORI

E40X
MLHZ
X
MH (2001+)

Ref.	R.O.
REC6G8-81870-00	6G8-81870-00

MOTORES / ENGINES / MOTORI

F8A-B (1986-99)
F9.9A
M,E,B (1985-99)
9.9F (1995-2000)
9.9-15-8-6/C-M-D (1984-2002)

Ref.	R.O.
REC65W-82575-01	65W-82575-01

MOTORES / ENGINES / MOTORI

F2.5
T-F 6-8
F9.9 -F15
9.9F-M
F13.5
F25 (2002+)

Ref.	R.O.
REC6A0-82550-01	6A0-82550-01

MOTORES / ENGINES / MOTORI

9.9D/15D (1985-93)
8N/JCEM (1984-96)
6CEM/6DEM (1984-96)

Ref.	R.O.
REC6E9-82575-02	6E9-82575-00

MOTORES / ENGINES / MOTORI

E30/GE/BMH (1996-12)
25V/M/E/B (1996-10)
6/8C/TRV/MSH (1996-12)

KITS

Interruptor de encendido para todo tipo de motores fueraborda o intraborda.
Emergency and stop switch for inboard or outboards.
Interruttore di accensione per tutti i tipi di motori fuoribordo o entrobordo.

Ref.		Envase / Pack / Qnt
REC40970	Kit completo / Complete kit / Kit completo	1 x blister
REC40990	Cuerda tirador de recambio / Spare	1 x blister
	Corda elastica di ricambio	
GS11290	Kit completo / Complete kit / Kit completo	1 x blister
GS11291	Cuerda tirador de recambio / Spare	1 x blister
	Corda elastica di ricambio	
GS11292	Kit completo / Complete kit / Kit completo	1 x blister

REC40970 - REC40990

GS11290 - GS11291

GS11292

Ref.	Envase / Pack / Qnt
GS11294	1 x blister

Kit de 8 llaves de recambio para:
Kit of 8 spare keys for:
Kit di 8 chiavi di ricambi per:
J/E, OMC, Mercury, Yamaha, Honda, Suzuki, Tohatsu.

LLAVES DE ARRANQUE
IGNITION STARTER SWITCH
CHIAVI DI ACCENSIONE

Ref.	R.O.	Tiempos / Strokes / Tempi
REC703-82510-13	703-82510-12	2, 4
REC61B-82510-02	61B-82510-01	2
REC703-82510-44	703-82510-43	2, 4
REC6K1-82510-07	6K1-82510-06	2, 4

REC703-82510-13
Montaje en mando control
Control box
Montaggio nel telecomando

REC61B-82510-02
Montaje en panel
Dash mount
Montaggio nel pannello

REC703-82510-44
Llave con choque
Push t. Choke
Chiave con contatto

REC6K1-82510-07
Llave doble instalación
Dual engine application
Chiave doppia installazione

SENSORES OXÍGENO
OXYGEN SENSOR
SENSORI OSSIGENO

Ref.	R.O.
REC67H-8592A-01	67H-8592A-01

MOTORES / ENGINES / MOTORI

LX200/5X200 (2001-05)
DX150/LX150 (2001-05)
SX150/VX150 (2001-05)

Ref.	R.O.
REC68F-8592A-00	68F-8592A-00

MOTORES / ENGINES / MOTORI

200HP (2001-2007)
150HP (2001-2007)
175HP (2001-2007)
L, Z, V-PETO, TLR, NETO

BUJÍAS CHAMPION
SPARK CHAMPION
CANDELE CHAMPION

Potencia HP / Power HP / Potenza HP	Año / Year / Anno	Ref
2 Tiempos / Stroke / Tempi		
2	1984+	**CHAL90C**
3	1988+	**CHAQL86C/L86C**
5	1984+	**CHAQL82C/L82C**
6	1986+	**CHAQL82C/L82C**
8	1984+	**CHAQL82C/L82C**
9.9	1984+	**CHAQL82C/L82C**
20	1996+	**CHAQL82C/L82C**
25	1999+	**CHAQL82C/L82C**
30	1984+	**CHAQL82C/L82C**
40	1984+	**CHAQL82C/L82C**
50	1995+	**CHARA8HC**
70	1984+	**CHAQL78C/L78C**
90B	1984+	**CHAQL78C/L78C**
90	1984-2000	**CHAQL78C/L78C**
115	1984-2005	**CHAQL78C/L78C**
130	1989+	**CHAQL78C/L78C**
150 Carb	1996+	**CHAQL82C/L82C**
150 EFI	1999-2000	**CHAQL78C/L78C**
150 EFI	2000+	**CHARC12YC**
150 MPDI	2000+	**CHARC12YC**
150 VMAX	1997+	**CHAQL78C/L78C**
175	1984+	**CHAQL78C/L78C**
175 VMAX	1992+	**CHAQL78C/L78C**
200 LX	1999+	**CHAQL78C/L78C**
200 LZ	1999+	**CHARC9YC4**
200 SX	1999+	**CHAQL78C/L78C**
200 VX	2000+	**CHAQL78C/L78C**
200 Z	2000+	**CHARC9YC4**
225	2000+	**CHAQL77JC4/L77JC4**
250	2000+	**CHAQL77JC4/L77JC4**
4 Tiempos / Stroke / Tempi		
2,5F	2003+	**CHAQL86C/L86C**
4F	1999+	**CHAQL86C/L86C**
9.9Fi	1996+	**CHAZ9Y**
9.9T	1996+	**CHAZ9Y**
15F	1999+	**CHARA8HS**
25F	1998+	**CHARA8HS**
30F	2001+	**CHARA8HC**
40F	1999+	**CHARA8HS**
50F	1999+	**CHARA8HC**
60	2002+	**CHARA8HC**
75	2003+	**CHAREC10YC4**
80	1999+	**CHAREC10YC4**

BUJÍAS NGK
SPARK NGK
CANDELE NGK

Potencia HP / Power HP / Potenza HP	Año / Year / Anno	Ref
2 Tiempos / Stroke / Tempi		
2A		NGKB6HS
2B	87-	NGKBR5HS
2B	85-86	NGKB7HS
2B	-84	NGKBR5HS
2C	95-	NGKB7HS
3,5A/AC		NGKB6HS
3A (Malta)		NGKBR6HS-10
4A/AC/AS/BC		NGKBR7HS
4A/B	01-	NGKB7HS
5A/AS		NGKB7HS
5B/BS		NGKB6HS
5C		NGKBR7HS
5D		NGKB5HS
6A		NGKB6HS
6B		NGKB5HS
6C		NGKBR7HS-10
6D		NGKBR6HS-10
7A		NGKB6HS
8A		NGKB6HS
8B		NGKB7HS
8C		NGKBR7HS-10
E8D		NGKBR7HS-10
9.5A		NGKB7HS
9.9B		NGKB7HS
9.9D		NGKBR7HS-10
9.9F	95-	NGKBR7HS-10
9A		NGKB6HS
12A		NGKB7HS
13.5A		NGKBR7HS-10
13.5F		NGKB7HS-10
15A		NGKB7HS
15B		NGKB7HS
15C		NGKB7HS
15D		NGKBR7HS-10
15F	95-	NGKBR7HS-10
20A		NGKB6HS
20B		NGKB6HS
20C (C20)	99-	NGKB7HS
20C/CE/CM		NGKBR7HS-10
20D		NGKBR7HS-10
25A		NGKB7HS
25B	-94	NGKB7HS
25B	01-	NGKBR7HS-10
25B/25Q	95-00	NGKBR7HS-10
25CMK		NGKB6HS
25D (25)		NGKB7HS
25DE		NGKBR7HS-10
25J		NGKBR7HS-10
25N		NGKBR7HS-10
25V (25)	95-	NGKBR7HS-10
28A/AE		NGKB7HS
30A/AE/AM		NGKB7HS
30D		NGKBR7HS-10
30G	95-	NGKB8HS-10
30H	01-	NGKB8HS-10
40AE/AM/AR		NGKB8HS
40BE/BM/BR		NGKB8HS
40C		NGKB8HS
40D	-89	NGKB8HS
40F		NGKB8HS
40FE		NGKB7HS-10
40GK		NGKB7HS
40H		NGKBR7HS-10
40J	01-	NGKB7HS
40Q (40)	95-	NGKBR8HS
40V	95-	NGKBR7HS-10
40X	-00	NGKBR7HS
40Y (ET)	01-	NGKBR8HS-10
40Y (MH)	01-	NGKBR7HS-10
48A/B		NGKB7HS
50	01-	NGKB8HS-10
50C		NGKB8HS
50CE		NGKB8HS-10
50D		NGKBR8HS-10
50G/50H	95-	NGKBR8HS-10
E60H		NGKBR8HS-10
60TLRB	03-	NGKB7HS-10
55AE	-78	NGKB8HS
55AE	79-	NGKB8HS-10
55AEM/AM/AW		NGKB8HS
55B		NGKB8HS-10
55B	90-	NGKBR8HS-10
55B(M)	95-	NGKB8HS
55BM/BW		NGKB8HS
60	01-	NGKB8HS-10
60AE	-78	NGKB8HS
60AE	79-	NGKB8HS-10
60B		NGKB8HS-10
60CE/CET		NGKB8HS-10
60D	86-	NGKBR8HS-10
60DE		NGKB8HS-10
60F		NGKBR8HS-10
E60H		NGKBR8HS-10
70B		NGKBR8HS-10
70C		NGKBR8HS-10
70ETO		NGKBR8HS-10
75A		NGKBR8HS-10
75B		NGKBR8HS-10
75C		NGKBR8HS-10
80A		NGKBR8HS-10
85A		NGKBR8HS-10
90A		NGKBR8HS-10
100AETOL	98-	NGKBR8HS-10
100A		NGKBR8HS-10
115A	04-	NGKB8HS-10
115AEO/AO		NGKBR8HS-10
115B/BETO		NGKBR8HS-10
115C		NGKBR8HS-10
115D	95-	NGKBR8HS-10
130A		NGKBR9HS-10
130B	95-	NGKBR9HS-10
130BETO		NGKBR9HS-10
140A		NGKBR8HS-10
140B	-88	NGKBR8HS-10
140B	89-	NGKBR9HS-10
140BETO		NGKBR9HS-10
140C/L140C	95-	NGKBR9HS-10
150A	86-	NGKBR8HS-10
150A	-85	NGKBR7HS-10
150AETO/CETO		NGKBR8HS-10
150C		NGKBR8HS-10
150F/L150F		NGKBR7HS-10
150G		NGKBR7HS-10
Z150P/Q		NGKBKR6EKU
D150H		NGKBR8HS-10
175A		NGKBR8HS-10
175B		NGKBR8HS-10
175D		NGKBR8HS-10
175F		NGKBR8HS-10
Z175GH		NGKR7EKU
200A/B	95-	NGKBR8HS-10
200C		NGKBR9HS-10
200F (L200F)		NGKBR8HS-10
200G		NGKBR8HS-10
Z200N		NGKR7EKU
220A / AET	86-	NGKBR8HS-10
225AETO		NGKBR8HS-10
225AO/BETO/B/C		NGKBR9HS-10
L225B/C/G		NGKBR9HS-10
225D		NGKBR8HS-10
225G		NGKBR9HS-10
250A / L250A		NGKBR8HS-10
250B / L250B		NGKBR9HS-10
Z250D	2005+	NGKBKR6EKU
Z250D/F	-2004	NGKR7EKU
Z300A	-2004	NGKBKR6EKU
Z300A	2005+	NGKBKR6EKU
4 Tiempos / Stroke / Tempi		
F2.5A	02-	NGKBR6HS
F4A	98-	NGKBR6HS
F6A	00-	NGKBR6HS-10
F6B	01-	NGKBR6HS-10
F8	01-	NGKBR6HS-10
F8-A	85-	NGKCR6HS
F8B/AM-AEM	86-02	NGKCR5HS
F8B/BM/BE	86-	NGKCR5HS
F8C	00-	NGKBR6HS-10
F9.9DE		NGKBR7HS-10
F9.9A	85-00	NGKCR6HS
F9.9B	86-00	NGKCR6HS
F9.9C/D	98-03	NGKDPR6EA-9
F13.5 A	98-03	NGKDPR6EA-9
F15A	98-03	NGKDPR6EA-9
F20A	98-01	NGKDPR6EA-9
F25A (E, ET)	98-02	NGKDPR6EA-9
F25A (MH)		NGKDPR6EA-9
F30A	01-02	NGKDPR6EA-9
F30 OHC	01-02	NGKDPR6EA-9
F40A/B	00-02	NGKDPR6EA-9
F40C		NGKDPR5EA-9
F45A/AETL	98-	NGKDPR6EA-9
F50A/B	95-02	NGKDPR6EA-9
F60A	02-	NGKDPR5EA-9
F80A	00-03	NGKLFR5A-11
F100A	99-03	NGKLFR5A-11
F115 V-41 7L	99-03	NGKLFR6A-11
F115A (FL-115A)		NGKLFR6A-11
F150A (FL-150A)		NGKLFR5A-11
FT8D		NGKBR6HS-10
FT9.9A	98-	NGKCR6HS
FT9.9D		NGKDPR6EA-9
FT25B		NGKDPR6EA-9
FT50B/BETL	98-	NGKDPR6EA-9
FT50C/G		NGKDPR6EA-9
FT60B/D		NGKDPR5EA-9
FX700(FX-1)	95-	NGKBR8HS
F150A		NGKLFR5A-11
F200A		NGKLFR5A-11
F225A		NGKLFR5A-11
F300		NGKLFR6A-11
F350		NGKLFR6A-11

BLOQUE MOTOR
ENGINE BLOCK
BLOCCO MOTORE

F2.5 AMH/MLH/MSH/MHA (ALL) (2003+)

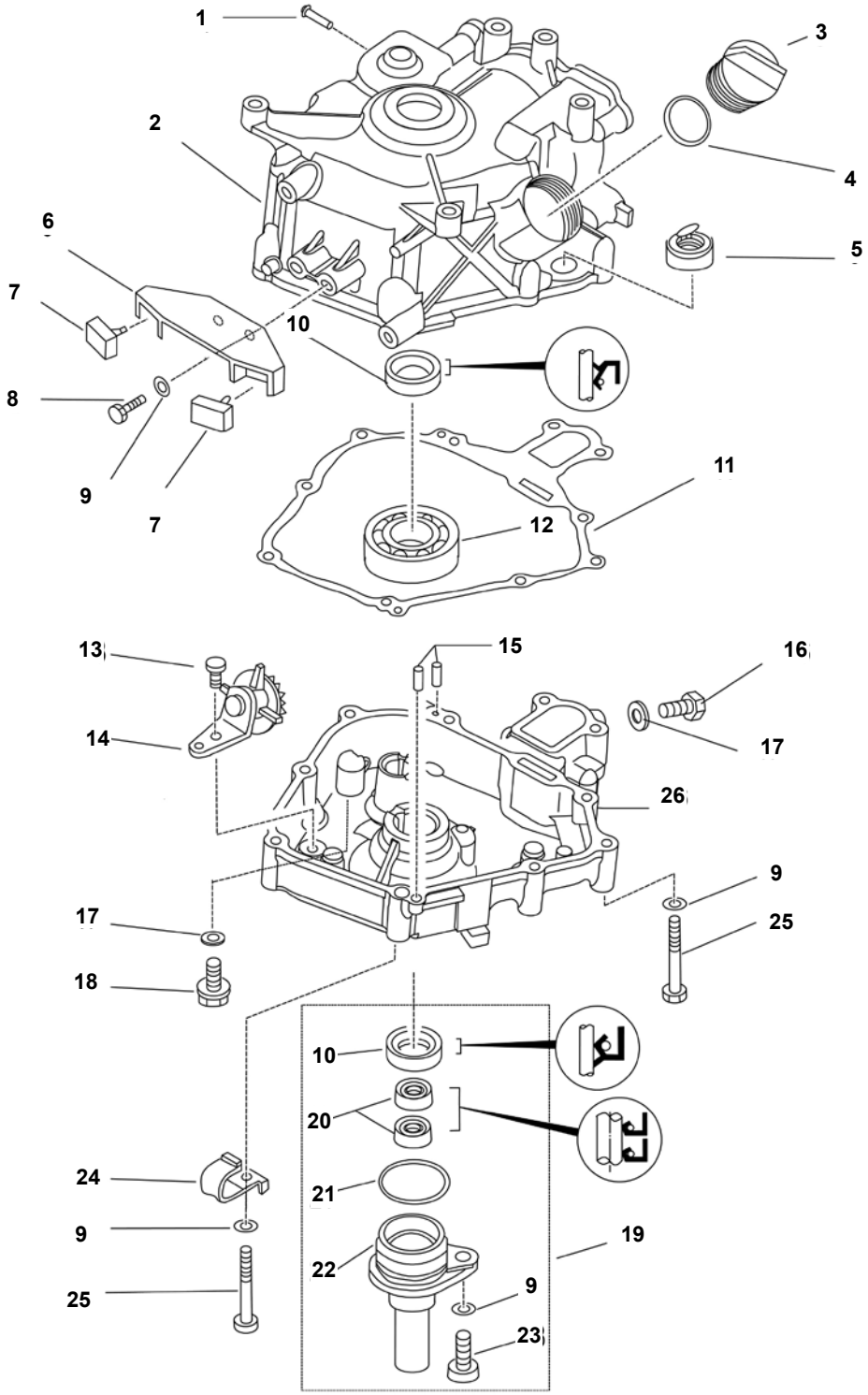

Nº	R.O. OEM	Ref.	Descripción	Description	Descrizione	Cantidad Quanty Quantità
1	6H1-14485-00	**PAT15-04010202**	TUBO AGUA	PIPE, WATER	TUBO ACQUA	1
2	69M-E1311-00-1	**PAF2.6-04010100**	CARCASA MOTOR	CRANK CASE	COPERCHIO MOTORE	1
3	69M-E5363-00	**PAF15-07050004**	TAPÓN ACEITE	PLUG, OIL	TAPPO OLIO	1
4	93210-24M79	**PAJASO F404 31-025**	ARO TÓRICO	O-RING	O-RING	1
5	69M-15361-00	**PAF2.6-04010102**	INDICADOR NIVEL	GAUGE, LEVEL	INDICATORE LIVELLO	1
6	69M-G2743-00	**PAF2.6-04000008**	SOPORTE MOTOR	BRACKET, DAMPER	SUPPORTO MOTORE	1
7	6G8-44352-00	**PAF2.6-04000009**	GOMA SOPORTE	RUBBER BLOCK, DAMPER	GOMMA SUPPORTO	2
8	92995-06600		TORNILLO	BOLT	VITE	2
9	92995-06600		ARANDELA	WASHER	RONDELLA	11
10	93102-20108	**PAF2.6-04010001**	RETÉN	OIL SEAL	PARAOLIO	2
11	69M-11351-A0	**PAF2.6-04000004**	JUNTA MOTOR	CRANK CASE COMPLEX GASKET	GUARNIZIONE	1
12	93306-272Y2		RODAMIENTO	BALL BEARING	CUSCINETTO	1
13	95817-06012		BOLT	TORNILLO	VITE	1
14	69M-E3102-00	**PAF2.6-04050100**	PIÑÓN	GEAR UNIT ASSY	PIGNONE	1
15	93604-12M07	**PAF15-00000013**	PIN	PIN	SPINOTTO	2
16	97095-08014		TORNILLO	BOLT	VITE	1
17	90201-08818-00	**PAF4-04000006**	ARANDELA	WASHER	RONDELLA	2
18	90105-08M76	**PAF4-04000001**	TORNILLO DRENAJE	BOLT, DISCHARGING OIL	VITE DRENAGGIO	1
19	93102-09004		RETÉN Y CUERPO	OIL SEAL SHELL ASSY	GUARNIZIONE E CORPO	1
20	93210-09004	**PAF2.6-04060002**	RETÉN	OIL SEAL	PARAOLIO	2
21	93210-35537	**PAF4-04060002**	ARO TÓRICO	O RING	O-RING	1
22	69M-E5396-00	**PAF2.6-04060001**	CUERPO RETÉN	SHELL, OIL SEAL	GUARNIZIONE CORPO	1
23	90465-08M99	**PAGB/T5783-2000**	TORNILLO	BOLT	VITE	1
24	90465-08M99	**PAF25-05000013**	BRIDA SUJECIÓN	CLAMP A	FLANGIA	1
25	97013-06045	**PAGB/T5783-2000**	TORNILLO	BOLT	VITE	8
26	69M-E5111-00-1S	**PAF2.6-04050001**	CARTER	CRANKCASE COVER	CARTER	1

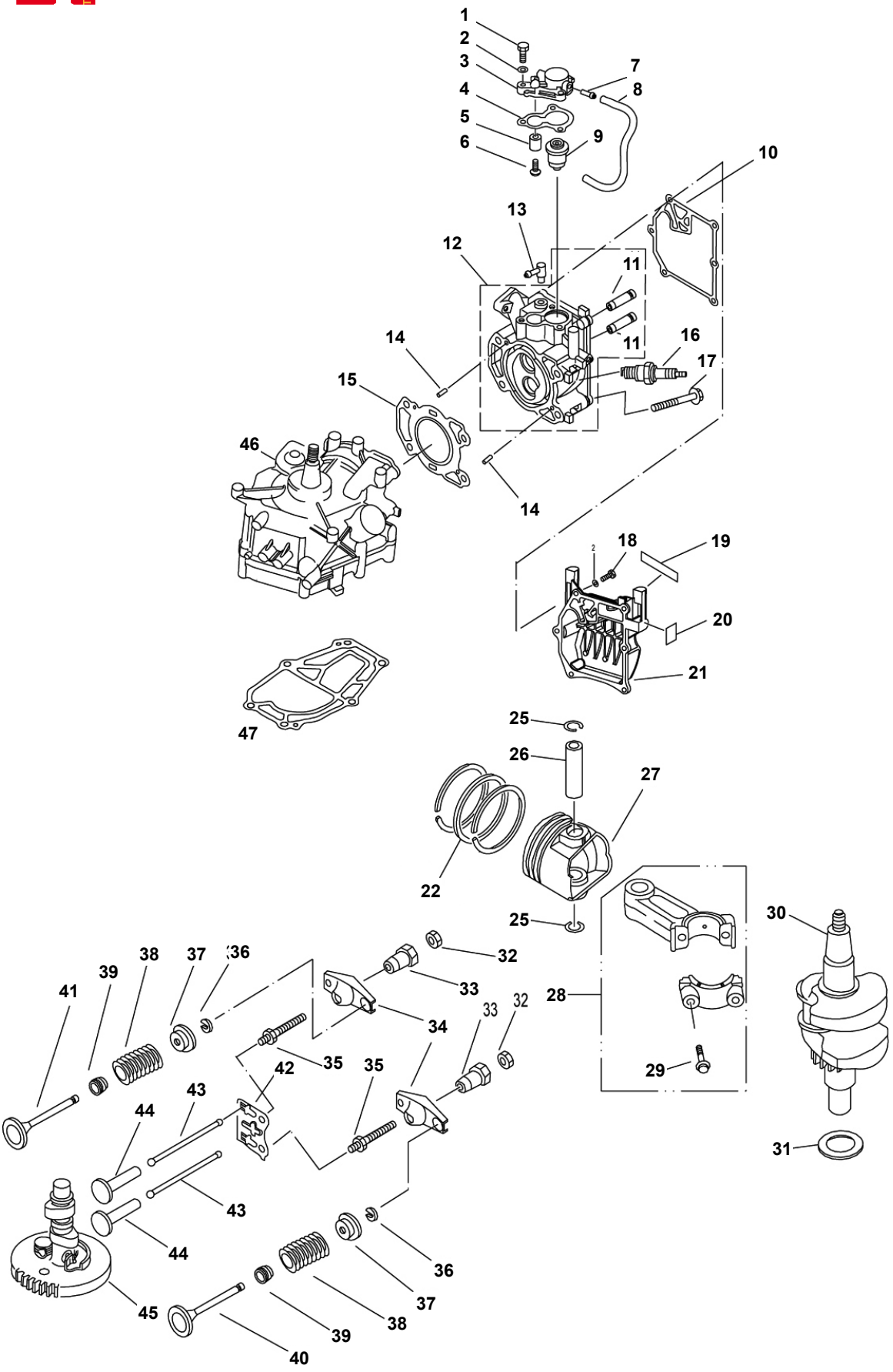
1
2
3
4
5
6
7
8
9
10
11
11
12
13
14
14
15
16
17
18
19
20
21
22
25
25
26
27
28
29
30
31
32
32
33
33
34
35
35
36
36
37
37
38
38
39
39
40
41
42
43
43
44
44
45
46
47

Nº	R.O. OEM	Ref.	Descripción	Description	Descrizione	Cantidad Quanty Quantità
1	97095-06020		TORNILLO	BOLT	VITE	3
2	92995-06600		ARANDELA	WASHER, PLATE	RONDELLA	9
3	69M-E2413-00-1S	**PAF2.6-04000501**	TAPA TERMOSTATO	COVER, THERMOSTAT	TAPPO TERMOSTATO	1
4	68D-E2414-A0	**PAF4-04000011**	JUNTA TAPA TERMOSTATO	GASKET, THERMOSTAT	GUARNIZIONE TAPPO TERMOSTATO	1
5	68D-E1325-00	**PAF4-04070003**	ÁNODO	ANODE	ANODO	1
6	97880-05025		TORNILLO	SCREW, PAN HEAD	VITE	1
7	650-24378-00	**PAF4-04010002**	PIPA	PIPE, JOINT	TUBO	1
8	90445-09808	**PAF2.6-04000007**	TUBO DE AGUA	PIPE, WATER	TUBO DELL'ACQUA	1
9	69M-12411-01	**PAT15-04000010**	TERMOSTATO	THERMOSTAT	TERMOSTATO	1
10	69M11193-AO	**PAF2.6-04000005**	JUNTA TAPA BALANCINES	GASKET, CYLINDER COVER	GUARN. COPERCHIO PUNTERIE	1
11	67D-11133-10		GUÍA VÁLVULA	VALVE GUIDE BUSH	GUIDA VALVOLA	2
12	69M-E1111-00-1S	**PAF2.6-04040100**	CULATA	CYLINDER HEAD ASSY	TESTATA	1
13	676-11372-00	**PAF15-04000005**	PIPA	SPILE WATER ASSY	TUBO	1
14	93604-12M07	**PAF15-00000013**	PIN	GEAR UNIT ASSY	SPINOTTO	2
15	69M-11181-00	**PAF2.6-04000001**	JUNTA CULATA	GASKET, CYLINDER HEAD	GUARNIZIONE TESTATA	1
16	94702-00248	**NGKBR6HS**	BUJÍA	SPARK PLUG	CANDELA	1
17	90105-08M36	**PAF4-04000034**	TORNILLO	BOLT	VITE	4
18	90105-06039		TORNILLO	BOLT	VITE	6
19	68D-E2138-40	**PAF2.6-07000008**	ADHESIVO	MARK 8	ADESIVO	1
20	67D-42797-10	**PAF4-08000110**	ADHESIVO	MARK 10	ADESIVO	1
21	69M-E1191-00-1S	**PAF2.6-04000006**	TAPA BALANCINES	COVER, CYLINDER HEAD	COPERCHIO PUNTERIE	1
22	69M-E1603-01	**REC69M-E1603-01**	AROS KIT	PISTON RING KIT	FASCIA KIT	1
25	93450-13130	**PAF2.6-04020006**	CLIP	CIRCLIP	CLIP	2
26	69M-E1633-00	**PAF2.6-04020005**	BULÓN	PIN, PISTON	BULLONE	1
27	69M-E1631-01-96	**PAF2.6-04020001**	PISTÓN	PISTON	PISTONE	1
28	69M-11650-00	**PAF2.6-04020100**	BIELA	ROD, CONNECTING	BIELLA	1
29	7FK-11654-00	**PAF2.6-04000003**	TORNILLO	BOLT	VITE	2
30	69M-11400-00	**PAF2.6-04030000**	CIGÜEÑAL	CRANK ASSY	ALBERO MOTORE	1
31	90201-23008	**PAF2.6-04000003**	ARANDELA	WASHER, PLATE	RONDELLA	1
32	7FK-12158-00	**PA166F-010011**	TUERCA	LOCK NUT	GHIERA	2
33	7FK-12165-00	**PA166F-010010**	TUERCA BALANCÍN	PIVOT, ROCKER ARM	DADO BILANCERE	2
34	67D-12151-00	**PA166F-010009**	BALANCÍN	ARM, VALVE ROCKER	BILANCERE	2
35	67D-12157-00	**PA166F-010008**	TORNILLO BALANCÍN	BOLT, ROCKER ARM	VITE PUNTERIE	2
36	7NJ-12118-00	**PA166F-010006**	SEGURO VÁLVULA	CLAMP, VALVE	VALVOLA DI SICUREZZA	2
37	7NJ-12117-00	**PAF4-04080010**	RETÉN RESORTE	SPRING, VALVE RETAINER	VALVOLA DI RITEGNO	2
38	68D-E2113-00	**PAF4-04080008**	MUELLE	SPRING, VALVE STEM	MOLLA	2
39	51Y-12119-00	**PA166F-010003**	RETÉN	SEAT, VALVE STEM	GUARNIZIONE	2
40	67D-12111-00	**PA166F-010001**	VÁLVULA ADMISIÓN	VALVE, INTAKE	VALVOLA ASPIRAZIONE	1
41	67D-12121-00	**PA166F-010002**	VÁLVULA ESCAPE	VALVE, EXHAUST	VALVOLA SCARICO	1
42	69M-E2155-00	**PAF2.6-04040001**	PLETINA	PLATE, PUSH ROD	ASTA	1
43	69M-12154-00	**PAF2.6-04000002**	VARILLA	ROD, VALVE PUSH	VALVOLA SPINTA	2
44	JA9-12153-00	**PA166F-000001**	EMPUJADOR	LIFTER, VALVE	BILANCERE	2
45	69M-12170-01	**PAF2.6-04000100**	ÁRBOL DE LEVAS	CAMSHAFT ASSY	ALBERO MOTORE	1
46	69M-WE0090-01-1S	**POWERHEAD 2.6**	MOTOR	POWER HEAD	MOTORE	1
47	69M-45113-A0	**PAF2.6-00000003**	JUNTA BASE MOTOR	GASKET ENGINE	GUARNIZIONE BASE MOTORE	1

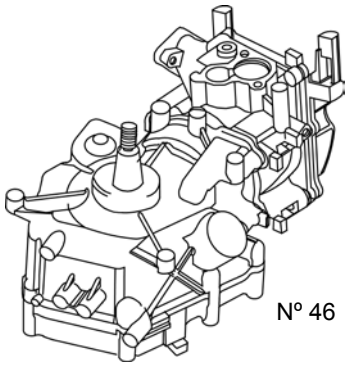

Nº 46

RECAMBIOS MARINOS S.L.

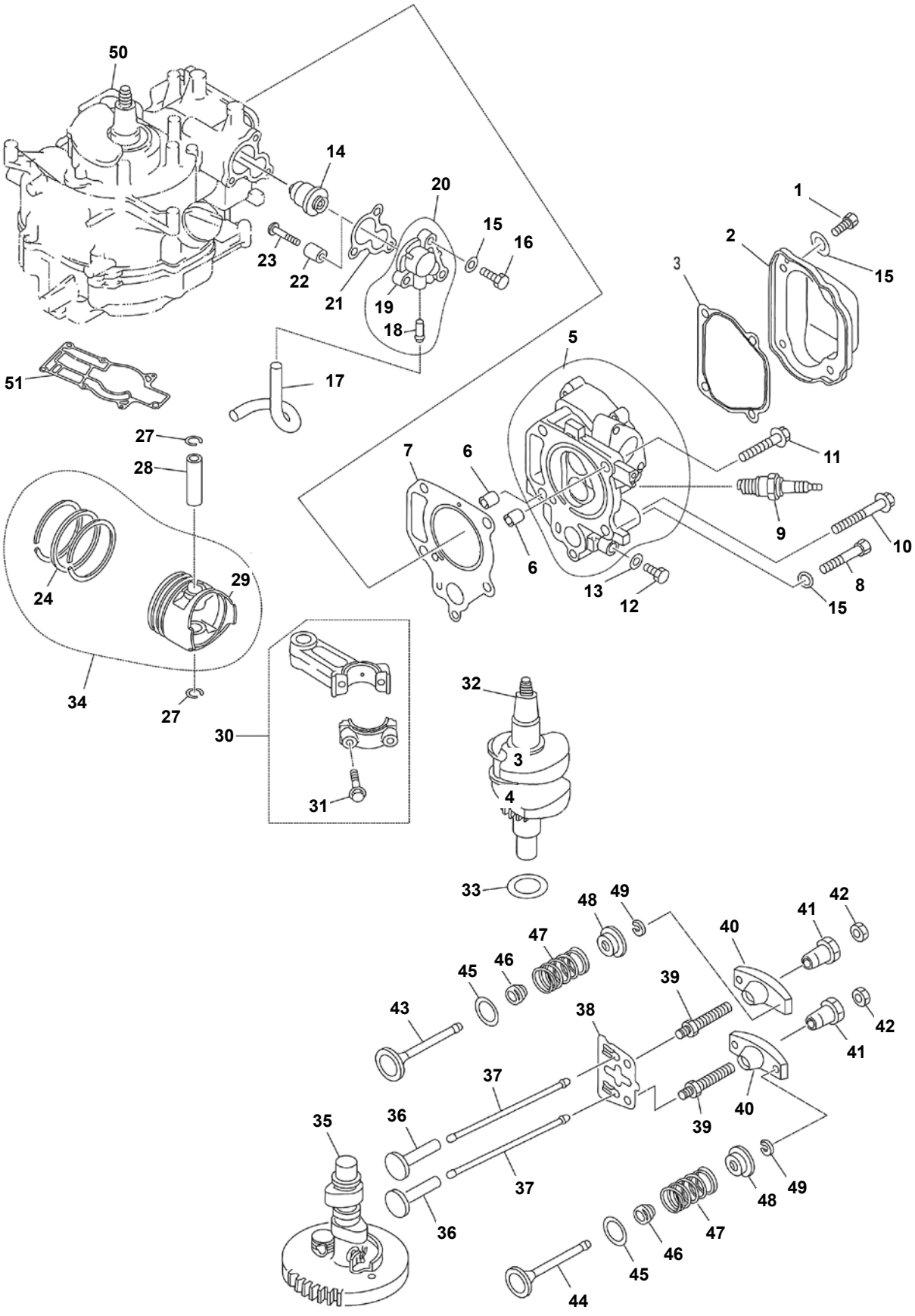
50
14
20
15
16
23
22
21
19
18
17
51
1
2
3
15
5
7
6
11
9
10
6
13
12
8
15
27
28
24
29
34
27
30
31
32
3
4
33
48
49
47
46
45
43
38
39
42
41
40
37
36
35
44

Nº	R.O. OEM	Ref.	Descripción	Description	Descrizione	Cantidad Quanty Quantità
1	40105-06M14-00		TORNILLO	BOLT, HEXAGON	VITE	4
2	67D-11191-00	**PAF4-04000018**	TAPA BALANCINES	COVER,CYLINDERHEAD	COPERCHIO BILANCERE	**1**
3	68D-E1193-A0	**PAF4-04000017**	JUNTA TAPA	GASKET, CYLINDER COVER	GUARNIZIONE COPERCHIO	**1**
4		**PAF4-04080002**	CONECTOR	PIPE, VALVE	CONNETTORE	**2**
5	68D-E1111-10-1S	**PAF4-04080101**	CULATA	CYLINDER, HEAD	TESTATA	**1**
6	99510-10114	**PAF4-04000003**	PIN	PIN, HOLLOW	SPINOTTO	**2**
7	67D-11181-A0	**PAF4-04000014**	JUNTA CULATA	GASKET, CYLINDER HEAD	GUARNIZIONE TESTATA	**1**
8	40105-06M25-00		TORNILLO	BOLT, HEXAGON	VITE	*1*
9	94702-00248	**NGKBPR7HS**	BUJÍA	PLUG, SPARK	CANDELA	**1**
10	90105-08M36-00	**PAF4-04000034**	TORNILLO	BOLT, CYLINDER HEAD "A"	VITE	**3**
11	90105-08046-00	**PAF4-04000033**	TORNILLO	BOLT	VITE	**1**
12	97095-08014-00		TORNILLO	BOLT, HEXAGON	VITE	1
13	90430-08800-00		ARANDELA	WASHER, PLATE	RONDELLA	1
14	69M-12411-01	**PAT15-04000010**	TERMOSTATO	TEHRMOSTAT	TERMOSTATO	**1**
15	92995-066000-00		ARANDELA	WASHER, PLATE	RONDELLA	8
16	97095-06020-00		TORNILLO	BOLT, HEXAGON	VITE	3
17	90445-09807	**PAF4-04000012**	TUBO	PIPE, RETURN	TUBO	**1**
18	650-24378-00	**PAF4-04010002**	CONECTOR	SPILEWATER	CONNETTORE	**1**
19		**PAF4-04070001**	TAPA TERMOSTATO	COVER, THERMOSTAT	COPERCHIO TERMOSTATO	**1**
20	68D-E2413-001S	**PAF4-04070100**	TAPA TERMOSTATO	COVER ADN SPLIE WATER ASSY	TAPPO TERMOSTATO	**1**
21	68D-E2414-A0	**PAF4-04000011**	JUNTA TAPA TERMOSTATO	GASKET, THERMOSTAT	GUARN. COPERCHIO TERMOSTATO	**1**
22	68D-E1325-00	**PAF4-04070003**	ÁNODO	ANODE	ANODO	**1**
23	97880-05025-00		TORNILLO	SCREW, PANHEAD	VITE	1
24	68D-E1603-00	**REC68D-E1603-00**	ARO PISTÓN KIT	PISTONRING KIT	FASCIA PISTONE KIT	**1**
27	93450-14088	**PAF4-04020006**	CLIP	CIRCLIP	CLIP	**2**
28	68D-E1633-00	**PAF4-04020005**	BULÓN	PIN, PISTON	BULLONE	**1**
29	68D-E1631-00-96	**PAF4-04020001**	PISTÓN	PISTON	PISTONE	**1**
30	67D-11650-00	**PAF4-04020100**	BIELA	ROD, CONNECTING	BIELLAA	**1**
31		**PAF4-04020103**	TORNILLO	BOLT, ROD CLEVEL	VITE	**2**
32	67D-11400-00	**PAF4-04030000**	CIGÜEÑAL	CRANK ASSY	ALBERO MOTORE	**1**
33	90201-266P2	**PAF4-04000004**	ARANDELA	WASHER, PLATE	RONDELLA	**1**
34		**PAF4-04020200**	PISTÓN	PISTON ASSY	PISTONE	**1**
35	68D-E2170-00	**PAF4-04040000**	ÁRBOL DE LEVAS	CAMSHAFT ASSY	ALBERO MOTORE	**1**
36	JA9-12153-00	**PA166F-000001**	EMPUJADOR	LIFTER, VALVE	BILANCERE	**2**
37	67D-12154-00	**PAF4-04000015**	VARILLA	ROD, VALVE PUSH	VALVOLA SPINTA	**2**
38	68D-E2155-00	**PAF4-04080009**	PLETINA	PLATE, PUSH ROD	ASTA	**1**
39	67D-12157-00	**PA166F-010008**	TORNILLO	BOLT, ROCKER ARM	VITE	**2**
40	67D-12151-00	**PA166F-010009**	BALANCÍN	ARM, VALVE ROCKER	BILANCERE	**2**
41	7FK-12165-00	**PA166F-010010**	TUERCA BALANCÍN	PIVOT, ROCKER ARM	DADO BILANCERE	**2**
42	7FK-12158-00	**PA166F-010011**	TUERCA	LOCKNUTM 6x0.75	GHIERA	**1**
43	67D-12111-00	**PAF4-04080005**	VÁLVULA ADMISIÓN	VALVE, INTAKE	VALVOLA ASPIRAZIONE	**1**
44	67D-12121-00	**PAF4-04080006**	VÁLVULA ESCAPE	VALVE, EXHAUST	VALVOLA SCARICO	**1**
45	68T-12116-00	**PAF4-04080007**	ARANDELA ASIENTO	SEAT, VALVE SPRING	RONDELLA BASAMENTO	**2**
46	51Y-12119-00	**PAPS2700.04.03**	RETÉN VÁLVULA	SEAT, VALVE STEM	GOMMINO VALVOLA	**2**
47	68D-E2113-00	**PAF4-04080008**	MUELLE	SPRING, VALVE INNER	MOLLA	**2**
48	7NJ-12117-00	**PAF4-04080010**	RETÉN RESORTE	SPRING, VALVE RETAINER	VALVOLA DI RITEGNO	**2**
49	7NJ-12118-00	**PAF4-04080011**	SEGURO VÁLVULA	CLAMP, VALVE	VALVOLA DI SICUREZZA	**2**
50	680-WE090-11-15	**POWERHEAD4-5HP**	MOTOR	POWER HEAD 4-5	MOTORE	**1**
51	67D-45113-A0	**PAF4-00000006**	JUNTA BASE MOTOR	GASKET ENGINE	GUARNIZIONE BASE MOTORE	**1**

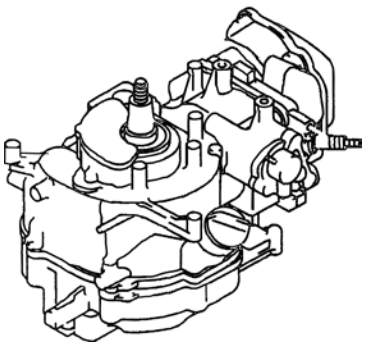

Nº 50

RECAMBIOS MARINOS S.L.

F4A/MSHAC/AMH/MLHB-S/MH/MLHE (2002-09)

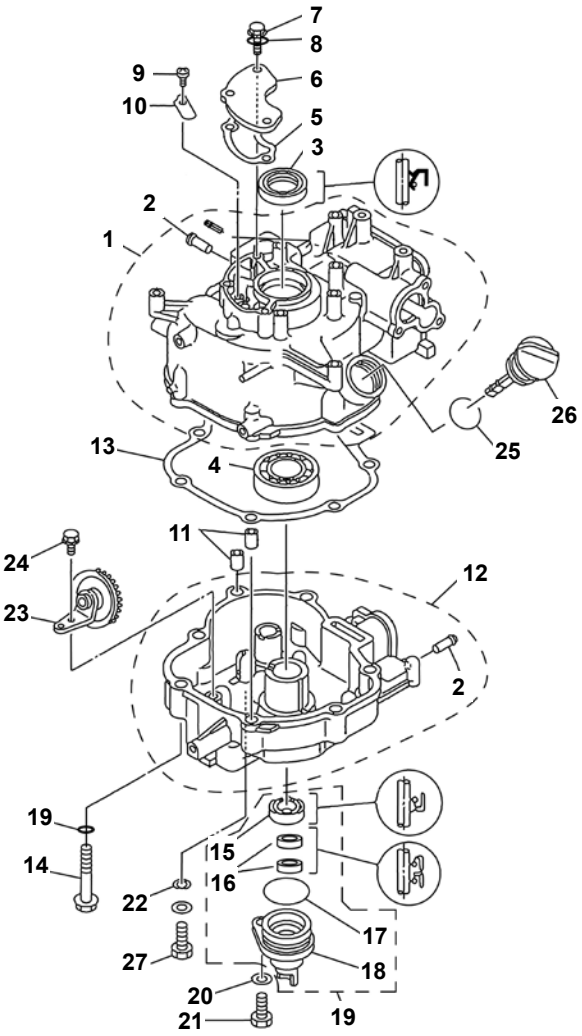

Nº	R.O. OEM	Ref.	Descripción	Description	Descrizione	Cantidad Quanty Quantità
1	68D-E1311-02-15	**PAF4-04010100**	CILINDRO	CRANK CASE	CILINDRO	1
2	650-24378-00	**PAF4-04010002**	PIPA	PIPE, JOINT	TUBO	1
3	93102-25090	**PAF4-04010004**	RETÉN	OIL SEAL	PARAOLIO	1
4	93306-205YD	**PAGB/T276-94**	RODAMIENTO	BEARING	CUSCINETTO	1
5	68D-E1169-A0	**PAF4-04000009**	JUNTA	BREATHER GASKET	GUARNIZIONE	1
6	68D-E1168-00	**PAF4-04000010**	TAPA	COVER	TUBO	1
7	90119-06M80-00		TORNILLO	BOLT, HEXAGON	VITE	3
8			ARANDELA	WASHER	RONDELLA	3
9	98503-04066-00		TORNILLO	SCREW, PAN HEAD	VITE	1
10	68D-E5346-00	**PAF4-04010003**	VÁLVULA	VALVE, BREATHER FLAP	VALVOLA	1
11	99510-10114	**PAF4-04000003**	PIN	HOLLOWPIN	SPINOTTO	2
12	68D-E5111-00-1S	**PAF4-04050001**	CARTER	COVER, CRANK CASE	CARTER	1
13	68D-11351-A0	**PAF4-04000002**	JUNTA CARTER	CRANK CASE COMPLEX	GUARNIZIONE CARTER	1
14	97575-08550-00		TORNILLO	BOLT, HEXAGON	VITE	7
15	93102-20108	**PAF4-04060003**	RETÉN	OIL SEAL	PARAOLIO	1
16	93102-10004	**PAF4-04060004**	RETÉN	OIL SEAL	PARAOLIO	2
17	93210-35537	**PAF4-04060002**	TÓRICA	O-RING	O-RING	1
18	68D-E5396-00-5B	**PAF4-04060001**	CUERPO RETÉN	SHELL, OIL SEAL	CORPO GUARNIZIONE	1
19		**PAF4-04060000**	CUERPO RETÉN COMPLETO	OIL SEAL, SHELL ASSY	CORPO GUARNIZIONE COMPLETO	1
20	92955-08600-00	**PAGB/T97.1-85**	ARANDELA	WASHER, PLATE	RONDELLA	8
21	97095-08020-00		TORNILLO	BOLT, HEXAGON	VITE	1
22	90201-08818	**PAF4-04000006**	ARANDELA	WASHER	RONDELLA	1
23	68D-E3102-00	**PAF4-04050100**	PIÑÓN	GEAR UNIT ASSY	PIGNONE	1
24	95817-06012-00		TORNILLO	BOLT, HEXAGON	VITE	1
25	93210-24M79	**PAF4-04000008**	TÓRICA	O-RING	O-RING	1
26	68D-E5362-00	**PAF4-04000007**	TAPÓN MEDIDOR NIVEL	PLUG WITH DIPSTICK	TAPPO LIVELLO	1
27	97095-08020-00	**PAF4-04000001**	TAPÓN DRENAJE	BOLT, DISCHARGING OIL	TAPPO DRENAGGIO	1

F8AM/BM/B/BE, F9.9 AE/AM/B/BE/BMH/ELH (1985-1999)

Ref.	R.O.
REC6G8-W0001-A3	6G8-W0001-A3

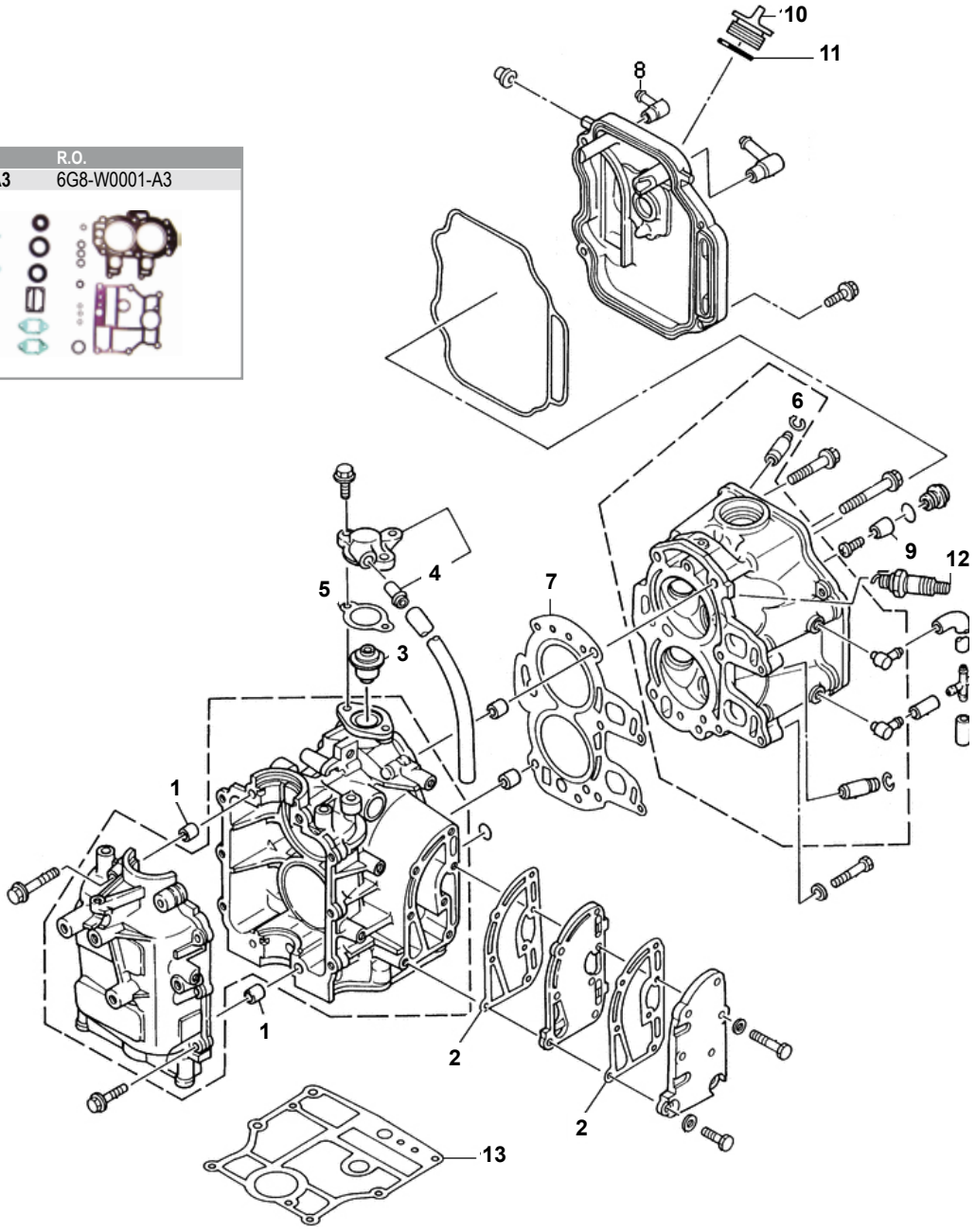

Nº	R.O. OEM	Ref.	Descripción	Description	Descrizione	Cantidad Quanty Quantità
1	91810-03014	**PAF15-07000001**	TORNILLO	BOLT	VITE	2
2	6G8-41112-02	**REC6G8-41112-02**	JUNTA	GASKET	GUARNIZIONE	2
3	6G8-12411-00	**PAT15-04000010**	TERMOSTATO	THERMOSTAT	TERMOSTATO	1
4	6E5-24377-00	**PAF15-07010006**	PIPA	UNION TUBE 2	TUBO	1
5	6G8-12414-00	**REC6G8-12414-A0**	JUNTA TAPA TERMOSTATO	GASKET	GUARNIZIONE COPERCHIO TERMOSTATO	1
6	93450-09M01	**PAF15-07040105**	CIERRE	LOCK	FERMO	4
7	6G8-11181-00	**REC6G8-11181-A1**	JUNTA CULATA	HEAD CYLINDER GASKET 1	GUARNIZIONE TESTATA	1
8	676-11372-00	**PAF15-04000005**	PIPA	HOSE NIPLE	TUBO	2
9	6G8-11325-00	**CM6G8-11325-00**	ÁNODO	ANODE	ANODO	1
10	6G8-15363-00	**PAF15-07050004**	TAPÓN ACEITE	OIL PLUG	TAPPO OLIO	1
11	93210-24M79	**PAJASO-F40431-025**	TÓRICA	O-RING	O-RING	1
12	94701-00282	**NGKCR6HS**	BUJÍA	SPARK PLUG	CANDELA	2
13	6G8-11351-00	**REC6G8-11351-A0**	JUNTA BASE MOTOR	GASKET ENGINE	GUARNIZIONE BASE MOTOR	1

F9.9 (2004-06), F13.5 (2003-06), F15 (2003-07)

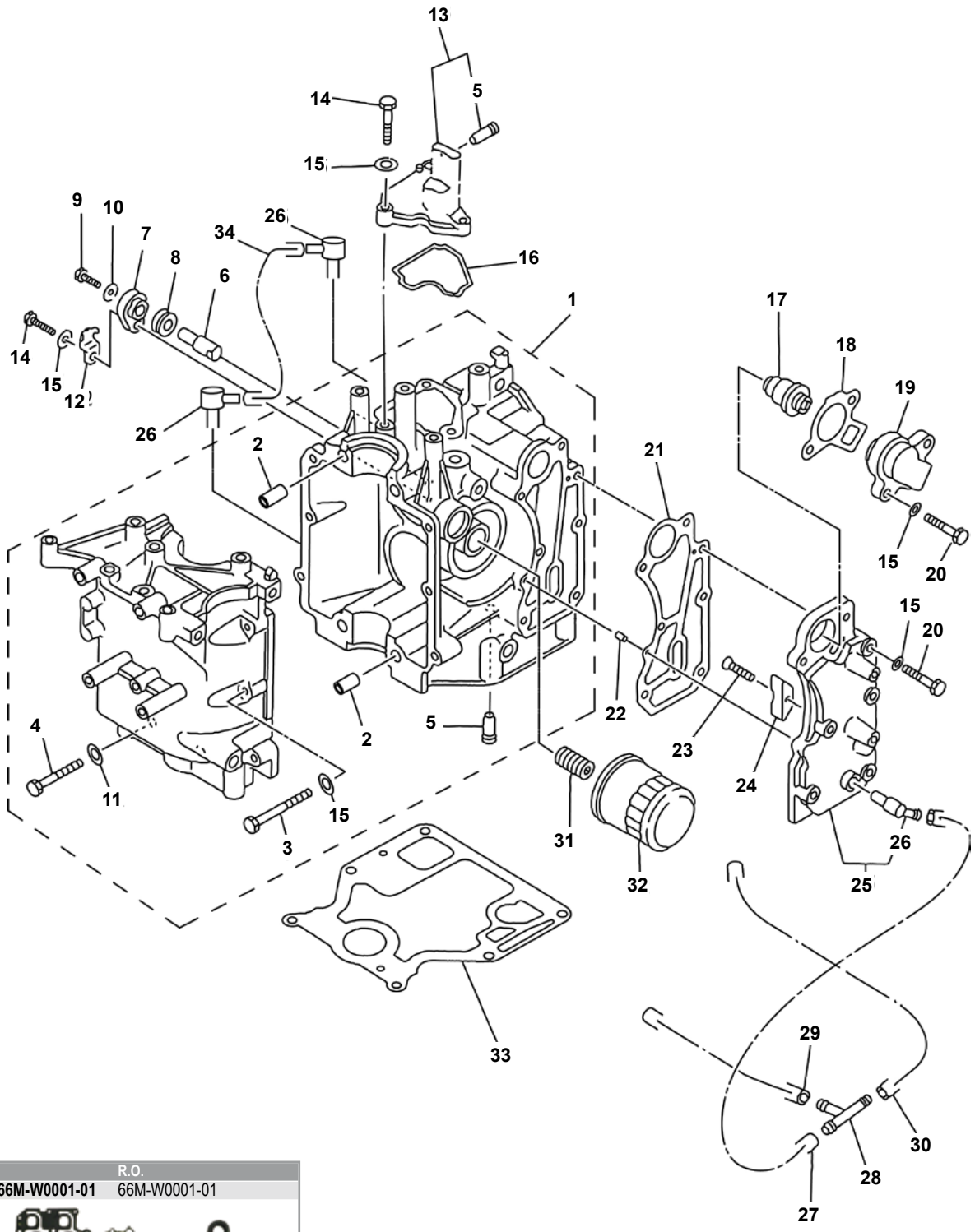

Ref.	R.O.
REC66M-W0001-01	66M-W0001-01

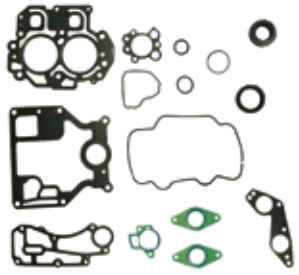

Kit juntas de motor
Power head gasket kit
Kit guarnizione motore

Nº	R.O. OEM	Ref.	Descripción	Description	Descrizione	Cantidad Quanty Quantità
1	66M-15100-02-1S	**PAF15-07010000**	BLOQUE MOTOR	CRANKCASE ASSY	BLOCCO MOTORE	1
2	99510-10114	**PAF15-07000001**	PIN	PIN, HOLLOW	SPINOTTO	2
3	93102-25090	**PAGB/T5783-2000**	TORNILLO	BOLT, HEXAGON	VITE	6
4	93306-205YD	**PAGB/T5783-2000**	TORNILLO	BOLT, HEXAGON	VITE	4
5	6E5-24377-00	**PAF15-07010006**	PIPA	PIPE, JOINT	TUBO	2
6	66M-11325-00	**PAF15-07010008**	ÁNODO	ANODE	ANODO	1
7	66M-11327-00-94	**PAF15-07010011**	TAPA ÁNODO	COVER, ANODE	COPERTURA ANODO	1
8	66M-11328-00	**PAF15-07010009**	ALOJAMIENTO ÁNODO	GROMMET, ANODE	ALLOGGIAMENTO ANODO	1
9		**PAGB/T5783-2000**	TORNILLO	SCREW, PAN HEAD	VITE	1
10		**PAGB/T97.1-85**	ARANDELA	WASHER 5	RONDELLA	1
11		**PAGB/T97.1-85**	ARANDELA	WASHER 8	RONDELLA	4
12	66M-12535-00	**PAF15-07010012**	EMPAQUETADORA	PLATE, ANODE	PIASTRA ANODO	1
13	66M-11168-001S	**PAF15-07010013**	TAPA	COVER, BREATHER	COPERCHIO	1
14	97575-08550-00	**PAGB/T5783-2000**	TORNILLO	BOLT	VITE	4
15	93102-20108	**PAGB/T97.1-85**	ARANDELA	WASHER 6	RONDELLA	17
16	66M-11357-00	**REC66M-11357-00**	JUNTA TAPA	BREATHER GASKET	GUARNIZIONE COPERCHIO	1
16	66M-11357-00	**PAF15-07010014**	JUNTA TAPA	BREATHER GASKET	GUARNIZIONE COPERCHIO	1
17	66M-12411-01	**PAF15-07000031**	TERMOSTATO	THERMOSTAT	TERMOSTATO	1
18	62Y-12414-00	**REC62Y-12414-00**	JUNTA TERMOSTATO	GASKET, THERMOSTAT	GUARNIZIONE TERMOSTATO	1
18	62Y-12414-00	**PAF15-07010022**	JUNTA TERMOSTATO	GASKET, THERMOSTAT	GUARNIZIONE TERMOSTATO	1
19	6H3-12413-001S	**PAF15-07010021**	TAPA TERMOSTATO	COVER, THERMOSTAT	COPERCHIO TERMOSTATO	1
20	90201-08818	**PAGB/T5783-2000**	TORNILLO	BOLT	VITE	7
21	66M-41114-01	**REC66M-41114-01**	JUNTA	GASKET, EXHAUST OUTER COVER	GUARNIZIONE	1
21	66M-41114-01	**PAF15-07010018**	JUNTA	GASKET, EXHAUST OUTER COVER	GUARNIZIONE	1
22	93604-12M07	**PAF15-07000013**	PIN	O-RING	SPINOTTO	2
23	68D-E5362-00	**PAGB/T5783-2000**	TORNILLO	SCREW	VITE	1
24	6E5-11325-00	**PAF15-07010026**	ÁNODO	ANODE	ANODO	1
25	66M-41113-20-1S	**PAF15-07010019**	TAPA	OUTTER COVER, EXHAUST	COPERCHIO	1
26	676-11372-00	**PAF15-04000005**	PIPA	WATER NIPPLE	TUBO	3
27	90445-09061	**PAF15-05000012**	TUBO	HOSE A	TUBO	1
28	688-24378-00	**PAF15-05000011**	CONECTOR	THREE-WAY PIPE	CONNETTORE	1
29	90445-09086	**PAF15-05000013**	TUBO	HOSE B	TUBO	1
30	90445-09104	**PAF15-05000014**	TUBO	HOSE C	TUBO	1
31	90401-20M00	**PAF15-07010003**	TORNILLO	BOLT UNION	VITE	1
32	5GH-13440-00	**PAF15-07010023**	FILTRO ACEITE	OIL CLEANER	FILTRO DELL'OLIO	1
32	5GH-13440-00	**REC5GH-13440-00**	FILTRO ACEITE	OIL CLEANER	FILTRO DELL'OLIO	1
33	66M-11351-10	**REC66M-11351-10**	JUNTA BASE MOTOR	GASKET, ENGINE	GUARNIZIONE BASE MOTORE	1
33	66M-11351-10	**PAF15-00000014**	JUNTA BASE MOTOR	GASKET, ENGINE	GUARNIZIONE BASE MOTORE	1
34		**PAF15-07010007**	TUBO	HOSE, RETURN OIL	TUBO	1

RECAMBIOS MARINOS S.L.

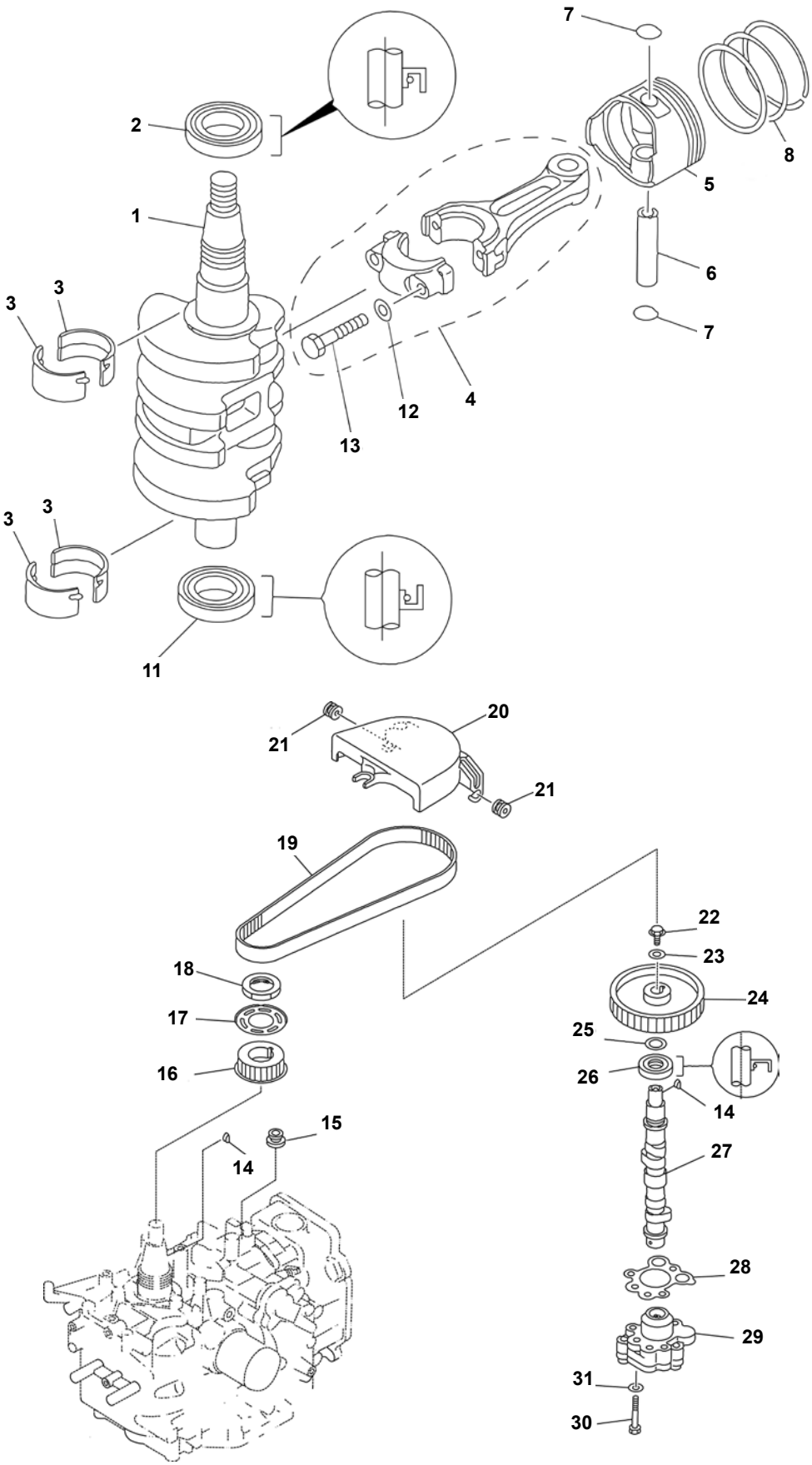
7
2
8
5
1
6
3
3
7
4
12
13
3
3
11
21
20
21
19
22
18
23
17
24
25
16
26
14
15
27
14
28
29
31
30

Nº	R.O. OEM	Ref.	Descripción	Description	Descrizione	Cantidad Quanty Quantità
1	66M-11411-00	**PAF15-07030000**	CIGÜEÑAL	CRANK ASSY	ALBERO MOTORE	1
2	93102-35M51	**PAF15-07030006**	RETÉN	OIL SEAL A	PARAOLIO	1
2	93102-35M51	**REC93102-35M51**	RETÉN	OIL SEAL A	PARAOLIO	1
3	66M-11416-00	**PAF15-07010024**	COJINETE BANCADA	MAIN BEARING	CUSCINETTO	4
4	66M-11650-00	**PAF15-07020100**	BIELA	ROD, CONNECTING	BIELLA	2
5	66M-11631-00-96	**PAF15-07020001**	PISTÓN	PISTON	PISTONE	2
6	634-11633-00	**PAF15-07020006**	BULÓN	PIN, PISTON	BULLONE	2
7	93450-15023	**PAF15-07020005**	CLIP	CIRCLIP	CLIP	4
8	66N-11603-00	**REC66N-11603-00**	ARO PISTÓN KIT	PISTON RING KIT	FASCIA PISTONE KIT	2
11	93102-25M52	**PAF15-07030007**	RETÉN	OIL SEAL B	PARAOLIO	1
11	93102-25M52	**REC93102-25M52**	RETÉN	OIL SEAL B	PARAOLIO	1
12	90201-07M01		ARANDELA	WASHER, PLATE	RONDELLA	4
13	66M-11654-00		TORNILLO	BOLT CONNECTING ROD	VITE	4
14	90280-03M01	**PAGB/T1099-1979**	CHAVETA	KEY, WOODRUFF	CHIAVETTA	1
15	90480-12072	**PAF15-07010027**	GOMA	RUBBER RING B	GOMMINO	1
16	66M-11536-10	**PAF15-07030003**	POLEA DENTADA	BELT PULLEY, TIMING	PULEGGIA	1
17	66M-11557-00	**PAF15-07030004**	ARANDELA	WASHER	RONDELLA	1
18	90170-28M37	**PAF15-07030005**	TUERCA	NUT	GHIERA	1
19	66M-46241-00	**PAF15-07000002**	CORREA DISTRIBUCIÓN	BELT TIMING	CINGHIA DISTRIBUZIONE	1
20	66M-46297-00	**PAF15-07000024**	TAPA	COVER, DUST	COPERCHIO	1
21	90480-10M16	**PAF15-07050003**	GOMA	RING RUBBER A	GOMMINO	2
22	97013-06016	**PAGB/T5783-2000**	TORNILLO	BOLT	VITE	1
23	90201-06M94	**PAGB/T5287-85**	ARANDELA	BIG WASHER	RONDELLA	1
24	66M-11537-00-94	**PAF15-07040018**	POLEA	BELT PULLEY, DRIVEN	PULEGGIA	1
25	90201-13201	**PAF15-07040017**	ARANDELA	WASHER	RONDELLA	1
26	93102-18M21	**PAF15-07040008**	RETÉN	OIL SEAL	PARAOLIO	1
26	93102-18M21	**REC93102-18M21**	RETÉN	OIL SEAL	PARAOLIO	1
27	66M-12170-00	**PAF15-07040200**	ÁRBOL DE LEVAS	CAMSHAFT ASSY	ALBERO MOTORE	2
28	66M-13329-10	**PAF15-07040016**	JUNTA	MAT, AIRPROOF	GUARNIZIONE	1
29	66M-13300-10	**PAF15-07040500**	BOMBA ACEITE	OIL PUMP ASSY	POMPA DELL'OLIO	1
30	97095-06035	**PAGB/T5783-2000**	TORNILLO	BOLT	VITE	3
31	92995-06600	**PAGB/T97.1-85**	ARANDELA	WASHER	RONDELLA	3

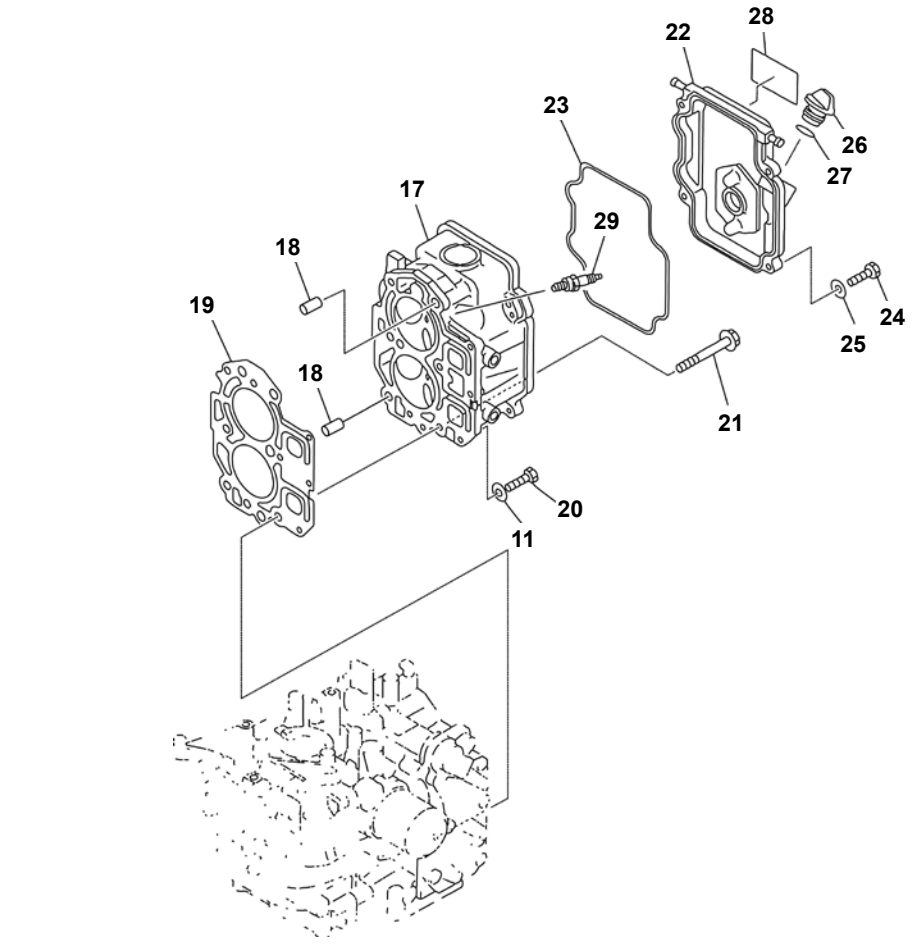
28
22
23
26
27
17
29
18
19
24
25
18
21
20
11

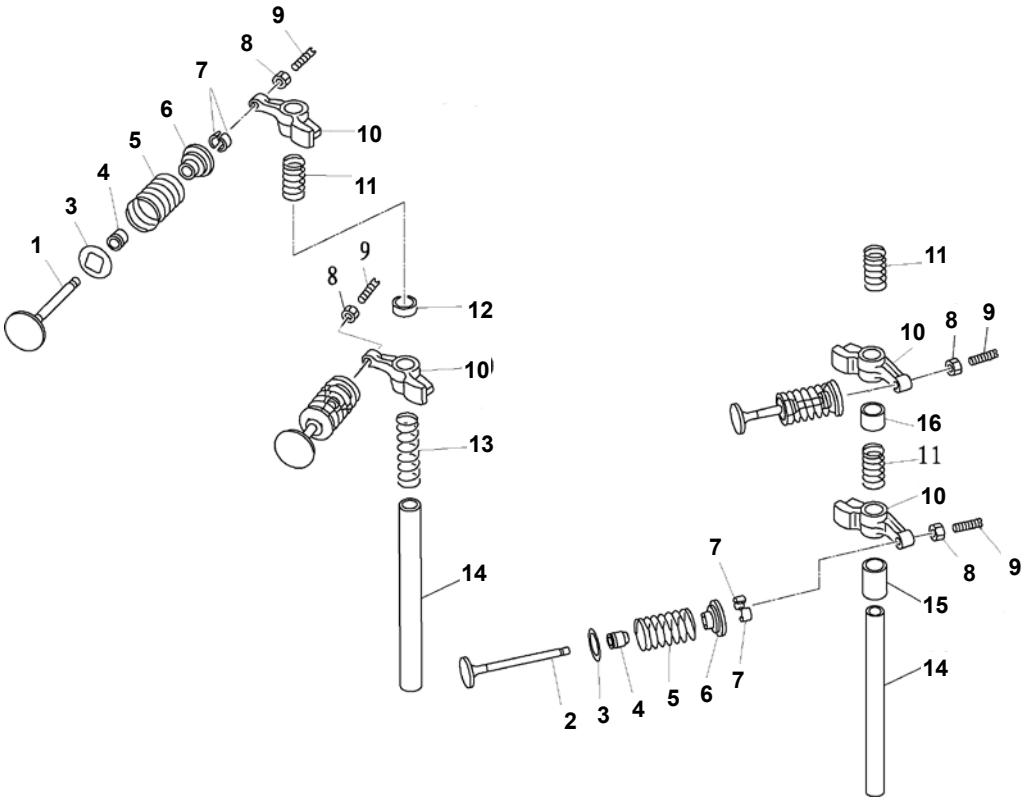
9
8
7
6
5
4
3
1
10
11
9
8
12
10
13
14
2
3
4
5
6
7
7
11
10
8
9
16
11
10
8
9
15
14

Nº	R.O. OEM	Ref.	Descripción	Description	Descrizione	Cantidad Quanty Quantità
1	66M-12111-00	**PAF15-07040001**	VÁLVULA ADMISIÓN	VALVE, INTAKE	VALVOLA ASPIRAZIONE	2
2	66M-12121-00	**PAF15-07040002**	VÁLVULA ESCAPE	VALVE, EXHAUST	VALVOLA SCARICO	2
3	66M-12116-00	**PAF15-07040004**	ASIENTO MUELLE	SEAL, VALVE SPRING	MOLLA VALVOLA	4
4	51Y-12119-00	**PAPS2700.04.03**	RETÉN	SEAL, VALVESTEM	GUARNIZIONE	4
5	66M-12113-00	**PAF15-07040005**	MUELLE	SPRING, VALVE	MOLLA	4
6	30X-12117-00	**PAF15-07050006**	RESORTE	RETAINER, VALVE SPRING	FERMA VALVOLA	4
7	30X-12118-00	**PAF15-07040007**	SEGURO VÁLVULA	COTTER, VALVE	VALVOLA DI SICUREZZA	8
8	62Y-12158-00	**PAF15-07040304**	TUERCA	LOCK NUT	GHIERA	4
9	62Y-12159-00	**PAF15-07040303**	REGULADOR	SCREW, VALVE ADJUSTING	REGOLATORE	4
10	66M-12151-10	**PAF15-07040301**	BALANCÍN	ROCKER	BILANCERE	4
11	90501-12M40	**PAF15-07040014**	MUELLE	SPRING, ROCKER B	MOLLA	3
12	90387-13001	**PAF15-07040009**	ALOJAMIENTO	BUSHER, VALVE INTAKE	GOMMINO VALVOLA	1
13	90501-12M41	**PAF15-07040013**	MUELLE	SPRING, ROCKER A	MOLLA	1
14	66M-12146-00	**PAF15-07040015**	EJE	SHAFT, ROCKER	ASSE	2
15	90387-13M56	**PAF15-07040012**	CASQUILLO	BUSHER, VALVE EXHAUST B	COPERCHIO	1
16	90387-13002	**PAF15-07040011**	CASQUILLO	BUSHER, VALVE EXHAUST A	COPERCHIO	1
17	66M-11111-01-1S	**PAF15-07040100**	CULATA	CYLINDER HEAD ASSY	TESTATA	1
18	99510-10114	**PAF15-07000001**	PIN	HOLLOW PIN	SPINOTTO	2
19	66M-11181-10	**PAF15-07000100**	JUNTA CULATA	GASKET, CYLINDER HEAD	GUARNIZIONE TESTATA	1
20	97513-06525		TORNILLO	BOLT, HEXAGON	VITE	3
21	90105-08M78	**PAF15-07000028**	TORNILLO	BOLT, FLANGE	VITE	6
22	66M-11191-00-1S	**PAF15-07050001**	TAPA BALANCINES	COVER, CYLINDER HEAD	COPERCHIO BILANCERE	1
23	66M-11356-00	**REC66M-11356-00**	JUNTA TAPA	SEAL, CYLINDER COVER	GUARNIZIONE TAPPO	1
24	97595-06520		TORNILLO	BOLT, HEXAGON	VITE	4
25	92995-06600	**PAGB/T5783-2000**	ARANDELA	WASHER, PLATE	RONDELLA	7
26	6G8-15363-00	**PAF15-07050004**	TAPÓN ACEITE	PLUG, OIL	TAPPO OLIO	1
27	93210-24M79	**PAF4-04000008**	TÓRICA	O-RING	O-RING	1
28	66M-12138-60	**PAF15-10030001**	ADHESIVO	MARK 4	ADESIVO	1
29	94701-00375	**NGKDPR7EA-9**	BUJÍA	SPARK PLUG	CANDELA	2
30	66M-W009B-15-1S	**POWERHEAD9.9-15**	MOTOR	POWER HEAD COMPLETE	MOTORE	15

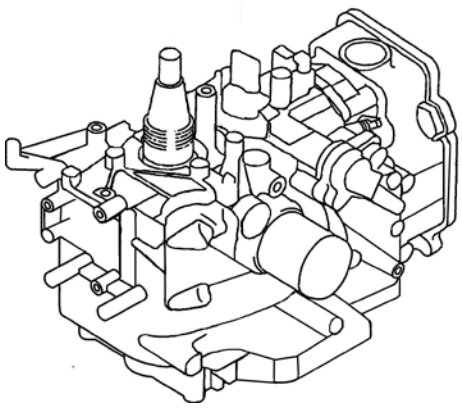

Nº 30

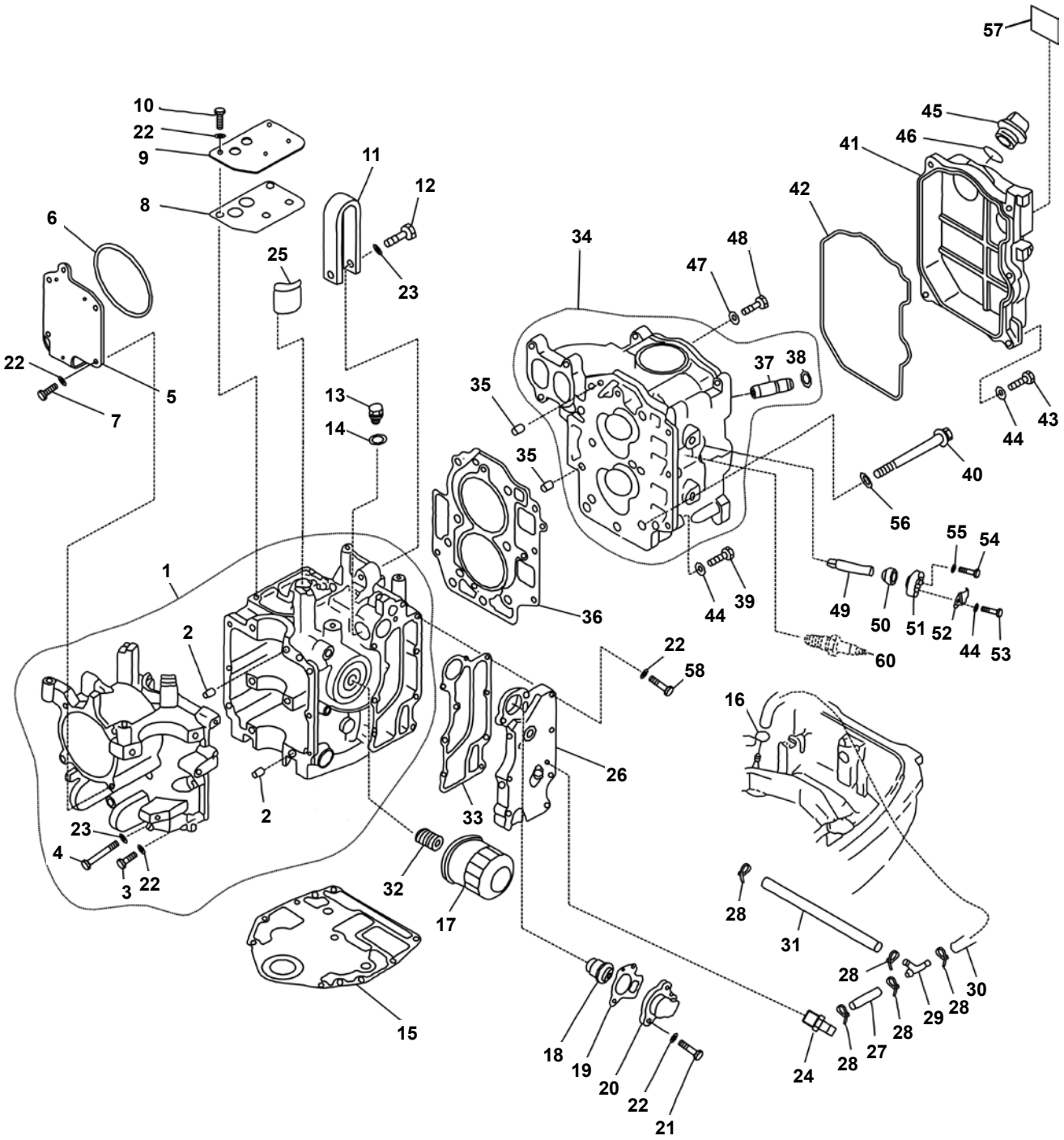

Ref.	R.O.
REC65W-W0001-00	65W-W0001-02

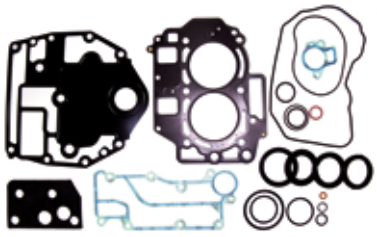

Kit juntas de motor
Power head gasket kit
Kit guarnizione motore

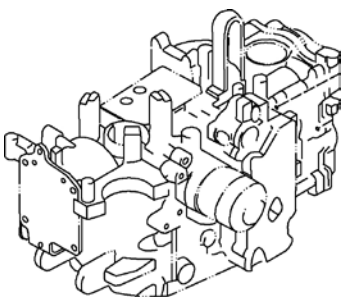

Nº	R.O. OEM	Ref.	Descripción	Description	Descrizione	Cantidad Quanty Quantità
1	65W-15100-00-94	**PAF25-05010000**	BLOQUE	CRANKCASE ASSY	BLOCCO	1
2	99530-08012	**PAF25-00000014**	PIN	PIN, DOWEL	SPINOTTO	2
3	90119-06MA5		TORNILLO	BOLT, HEXAGON	VITE	6
4	90119-08M01		TORNILLO	BOLT, HEXAGON	VITE	6
5	65W-15121-00	**PAF25-05000007**	TAPA	CRANKCASE	COPERCHIO	1
6	65W-15663-00	**PAGB/T3452.1-1992**	JUNTA	SEAL	GUARNIZIONE	1
7	65W-12228-00		TORNILLO	BOLT, HEXAGON	VITE	4
8	65W-11169-00	**PAF25-05010108**	JUNTA	GASKET, BREATHERCOVER	GUARNIZIONE	1
9	65W-11168-00	**PAF25-05010109**	TAPA	COVER, BREATHER	TAPPO	1
10	65W-12228-00		TORNILLO	BOLT, HEXAGON	VITE	4
11	66W-11119-00	**PAF25-05010106**	SOPORTE	HANGER, ENGINE	SUPPORTO	1
12	65W-08M87		TORNILLO	BOLT, HEXAGON	VITE	1
13	90340-14M06	**PAF15-04000002**	TORNILLO DRENAJE	BOLT, OIL DRAIN	VITE DRENAGGIO	1
14	90430-14M09	**PAF15-04000003**	ARANDELA	WASHER	RONDELLA	1
15	65W-11351-00	**PAF25-00000013**	JUNTA BASE MOTOR	GASKET, ENGINE	GUARNIZIONE BASE MOTORE	1
16	90467-09M09	**PAF4-04000030**	MUELLE	SPRING, FUEL PIPE “B”	MOLLA	1
17	5GH-13440-00	**PAF25-05000100**	FILTRO ACEITE	OIL CLEANER	FILTRO OLIO	1
17	5GH-13440-00	**REC5GH-13440-00**	FILTRO ACEITE	OIL CLEANER	FILTRO OLIO	1
18	6G8-12411-02	**PAF15-07000031**	TERMOSTATO	THERMOSTAT	TERMOSTATO	1
19	62Y-12414-00	**PAF15-07010022**	JUNTA TERMOSTATO	GASKET, THERMOSTAT	GUARNIZIONE TERMOSTATO	1
20	6H3-12413-00-9M	**PAF15-07010021**	TAPA TERMOSTATO	COVER, TEHRMOSTAT	TAPPO TERMOSTATO	1
21	90119-06MA5		TORNILLO	BOLT	VITE	2
22	66M-11356-00	**PAGB/T97.1-85**	ARANDELA	WASHER 6	RONDELLA	17
23	97595-06520	**PAGB/T97.1-85**	ARANDELA	WASHER 8	RONDELLA	7
24	62Y-11372-01	**PAF25-05010113**	PIPA	NIPPLE, HOSE	TUBO	1
25	65W-13286-00	**PAF25-05010107**	FILTRO	CLEANER	FILTRO	1
26	65W-41113-01-94	**PAF25-05010112**	TAPA	OUTTER COVER, EXHAUST	TAPPO	1
27	90445-09068	**PAF25-03000008**	TUBO	HOSE	TUBO	1
28	90465-11M10	**PAHT-2.5x60**	BRIDA	CLAMP	FLANGIA	5
29	688-24378-00	**PAF15-05000011**	CONECTOR	THREE-WAY PIPE	CONNETTORE	1
30	90445-09105	**PAF25-03000011**	TUBO	HOSE	TUBO	1
31	90445-09095	**PAF25-03000009**	TUBO	HOSE	TUBO	1
32	90401-20M00	**PAF15-07010003**	TORNILLO	BOLT, UNION	VITE	1
33	65W-41114-00	**PAF25-05010111**	JUNTA	GASKET, EXHAUST OUTER COVER	GUARNIZIONE	1
34	65W-11111-02-94	**PAF25-05050100**	CULATA	CYLINDER ASSY	TESTATA	1
35	99530-08012	**PAF25-00000014**	PIN	PIN, DOWEL	SPINOTTO	2
36	65W-11181-30	**PAF25-05040000**	JUNTA CULATA	GASKET, CYLINDER HEAD	GUARNIZIONE TESTATA	1
37	62Y-11133-10	**PAF25-05050104**	GUÍA VÁLVULA	VALVE GUIDE BUSH	GUIDA VALVOLA	4
38	93450-09M01	**PAF15-07040105**	CLIP	CIRCLIP, GUIDEBUSH	CLIP	4
39	90119-06MA3		TORNILLO	BOLT, HEXAGON	VITE	6
40	90119-09M00	**PAF25-05000002**	TORNILLO	BOLT, FLANGE	VITE	9
41	65W-11191-00-94	**PAF25-05000005**	TAPA BALANCINES	COVER, CLYLINDER HEAD	TAPPO BILANCERE	1
42	65W-11356-00	**PAF25-05000004**	JUNTA TAPA	SEAL,CYLINDER COVER	GUARNIZIONE TAPPO	1
43	90119-06MA3		TORNILLO	BOLT, HEXAGON	VITE	5
44		**PAGB/T97.1-85**	ARANDELA	WASHER, PLATE	RONDELLA	10
45	6G8-15363-00	**PAF15-07050004**	TAPÓN ACEITE	PLUG, OIL	TAPPO OLIO	1
46	93210-24M79		TÓRICA	O-RING	O-RING	1
47	90430-06014	**PAF25-05050007**	JUNTA	GASKET	GUARNIZIONE	1
48	90109-06M65	**PAF25-05050006**	TORNILLO	BOLT	VITE	1
49	62Y-11325-00	**PAF25-02010005**	ÁNODO	ANODE	ANODO	2
50	66M-11328-00	**PAF15-07010009**	ALOJAMIENTO	GROMMET, ANODE	ANELLO TENUTA	2
51	66M-11327-00-94		TAPA	COVER, ANODE	TAPPO	2
52	66M-12535-00		PLETINA	PLATE, ANODE	PIASTRA ANODO	2
53	97095-06020		TORNILLO	BOLT, HEXAGON	VITE	2
54	97095-05012		TORNILLO	BOLT, HEXAGON	VITE	2
55	92995-05600		ARANDELA	WASHER, PLATE	RONDELLA	2
56			ARANDELA	WASHER, PLATE	RONDELLA	6
57	62Y-12138-40		ADHESIVO	SIGN 5	ADESIVO	1
58	90119-06MAS		TORNILLO	BOLT	VITE	7
59		**POWER HEAD 20-25**	MOTOR	COMPLETE, POWER	MOTORE	1
60	94701-00375	**NGKDPR7EA-9**	BUJÍA	SPARK-PLUG	CANDELA	2

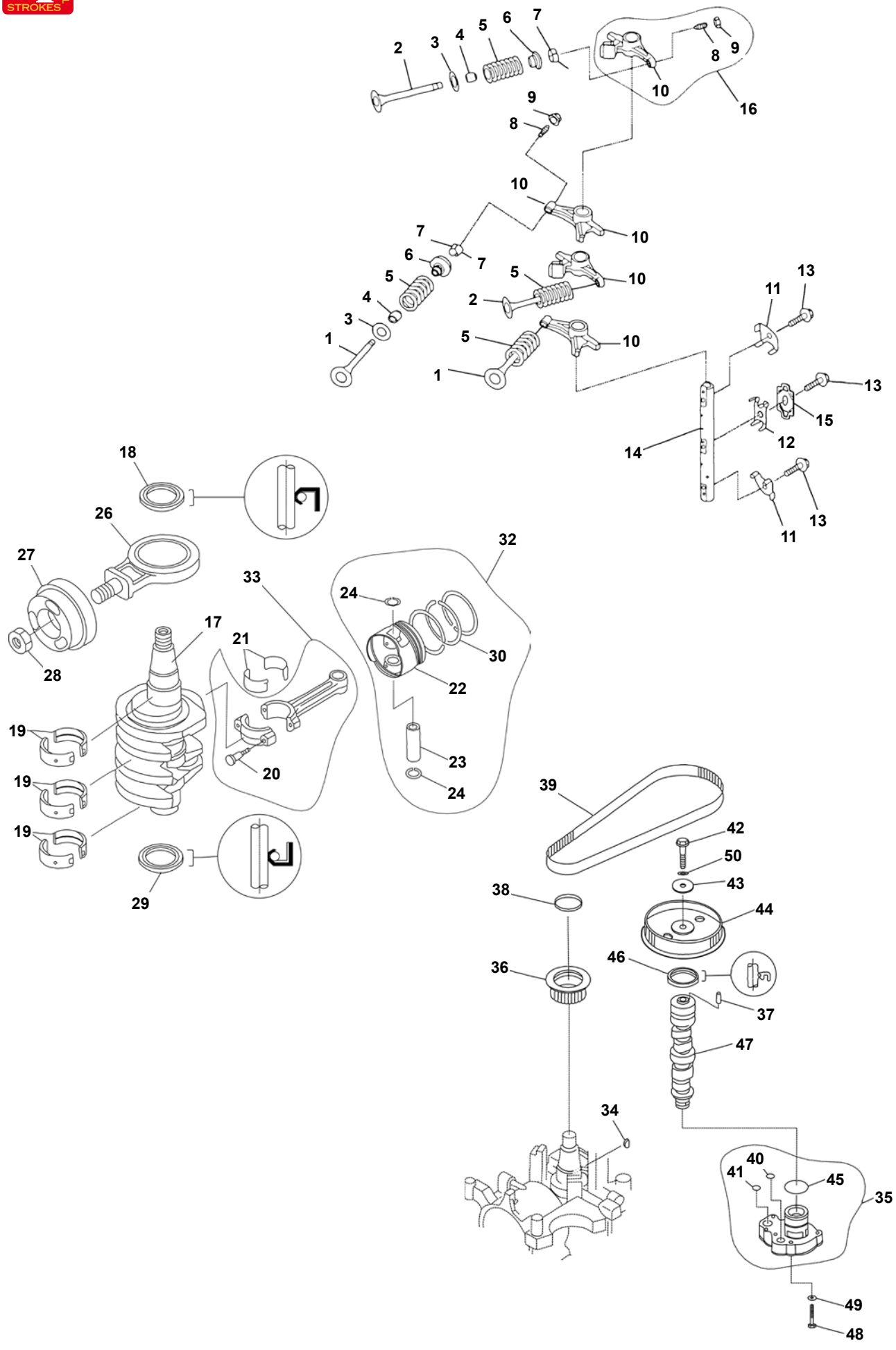
1
2
3
4
5
6
7
8
9
10
11
12
13
14
15
16
17
18
19
20
21
22
23
24
26
27
28
29
30
32
33
34
35
36
37
38
39
40
41
42
43
44
45
46
47
48
49
50

Nº	R.O. OEM	Ref.	Descripción	Description	Descrizione	Cantidad Quanty Quantità
1	67C-12111-00	**PAF25-05050001**	VÁLVULA ADMISIÓN	VALVE, INTAKE	VALVOLA ASPIRAZIONE	2
2	62Y-12121-00	**PAF25-05050002**	VÁLVULA ESCAPE	VALVE, EXHAUST	VALVOLA SCARICO	2
3	62Y-12116-00	**PAF25-05050003**	ASIENTO MUELLE	SEAL, VALVE SPRING	MOLLA VALVOLA	4
4	51Y-12119-00	**PAPS-2700.04.03**	RETÉN VÁLVULA	SEAL, VALVE STEM	GOMMINO VALVOLA	4
5	51Y-12119-00	**PAF25-05050005**	MUELLE	SPRING, VALVE	MOLLA	4
6	30X-12117-00	**PAF15-07040006**	RESORTE	RETAINER, VALVE SPRING	FERMA VALVOLA	4
7	30X-12118-00	**PAF15-07040007**	SEGURO VÁLVULA	COTTER, VALVE	VALVOLA SICUREZZA	8
8	62Y-12159-00	**PAF15-07040303**	TORNILLO	SCREW, VALVE ADJUSTING	VITE	1
9	62Y-12158-00	**PAF15-07040304**	TUERCA	NUT	GHIERA	1
10	65W-12151-00	**PAF25-05050301**	BALANCÍN	ROCKET	BILANCERE	1
11	62Y-12238-00	**PAF25-05050009**	PLETINA	PLATE, BOLT STOPPER	PIASTRINA	2
12	62Y-12216-00	**PAF25-05050011**	MUELLE	SPRING	MOLLA	1
13	90109-08M63	**PAF25-05050019**	TORNILLO	BOLT	VITE	3
14	65W-12146-00	**PAF25-05050008**	EJE	SHAFT, ROCKET	ASSE	1
15	62Y-12231-00	**PAF25-05050012**	PLETINA	PLATE B, BOLT STOPPER	PIASTRINA	1
16		**PAF25-05050300**	BALANCÍN COMPLETA	ROCKET ASSY	BILANCERE COMPLETO	4
17	65W-11411-01	**PAF25-05020001**	CIGÜEÑAL	CRANK SHAFT	ALBERO MOTORE	1
18	93102-43M42	**PAF25-05020003**	RETÉN	OIL SEAL B	PARAOLIO	1
19	62Y-11416-00	**PAF25-05010302-1**	COJINETE BANCADA	MAIN BEARING	CUSCINETTI BANCO	6
19	62Y-11416-10	**PAF25-05010302-2**	COJINETE BANCADA	MAIN BEARING	CUSCINETTI BANCO	6
20	62Y-11654-00	**PAF25-05020204**	TORNILLO	BOLT, CONNECTINGROD	VITE	2
21	62Y-11656-00	**PAF25-05020203-1**	COJINETE BIELA	PLANE BEARING, CONNECTINGROD	CUSCINETTI BIELLAA	2
21	62Y-11656-00	**PAF25-05020203-2**	COJINETE BIELA	PLANE BEARING, CONNECTINGROD	CUSCINETTI BIELLAA	2
22	65W-11631-00-96	**PAF25-05020101**	PISTÓN	PISTON	PISTONE	2
23	62Y-11633-00	**PAF25-05020105**	BULÓN	PIN, PISTON	BULLONE	2
24	93450-17129	**PAF25-05020106**	CLIP	CIRCLIP	CLIP	4
26	65W-11665-00	**PAF25-05020310**	BIELA	CON-ROD ASSY, BALANCE	BIELLA	1
27	65W-11642-11	**PAF25-05020301**	PISTÓN CONTRA	PISTON, BALANCE	CONTRO PISTONE	1
28	90170-35M47	**PAF25-05000026**	TUERCA	NUT	GHIERA	1
29	93102-35M47	**PAF25-05020002**	RETÉN	OIL-SEAL A	GUARNIZIONE	1
31	67C-11603-00	**REC67C-11603-00**	ARO PISTÓN KIT	PISTON RING KIT	FASCIA PISTONE KIT	2
32	65W-41114-00	**PAF25-05020100**	PISTÓN COMPLETO	PISTON ASSY	PISTONE COMPLETO	2
33	67C-11650-00	**PAF25-05020200**	BIELA	ROD, CONNECTING	BIELLAA	2
34	90280-04M06	**PAF4-04000019**	CHAVETA	KEY, WOODRUF	CHIAVETTA	1
35	65W-13300-00	**PAF25-05050400**	BOMBA ACEITE	OIL PUMP ASSY	POMPA OLIO	1
36	65W-11536-10	**PAF25-05000021**	POLEA	BELT PULLEY, TIMING	PULEGGIA	1
37	93605-14143	**PAF25-05050016**	PIN	PIN, DOWELL	SPINOTTO	1
38	65W-11476-00	**PAF25-05000022**	MUELLE	BUSH, SPRING	MOLLA	1
39	65W-46241-00	**PAF25-05000023**	CORREA DISTRIBUCIÓN	BELT, TIMING	CINGHIA DISTRIBUZIONE	1
40	93210-12MG9	**PAF25-05050013**	TÓRICA	O-RING A	O-RING	1
41	93210-14515	**PAF25-05050014**	TÓRICA	O-RING B	O-RING	1
42	90119-06MA3	**PAGB/T5785-2000**	TORNILLO	BOLT	VITE	1
43	90201-10M06	**PAF25-05050018**	ARANDELA	WASHER, PLATE	RONDELLA	1
44	65W-11537-01	**PAF25-05050017**	POLEA DENTADA	BELT PULLEY, DRIVEN	PULEGGIA DENTATA	1
45	93210-33MH2	**PAF25-05050015**	TÓRICA	O-RING C	O-RING	1
46	93102-37M40	**PAF25-05050021**	RETÉN	OIL SEAL	PARAOLIO	1
47	65W-12171-10	**PAF25-05050200**	ÁRBOL DE LEVAS	CAMSHAFT ASSY	ALBERO MOTORE	1
48		**PAGB/T5782-2000**	TORNILLO	BOLT	VITE	4
49	66M-11328-00	**PAGB/T97.1-85**	ARANDELA	WASHER , PLATE	RONDELLA	4
50	66M-11327-00-94	**PAGB/T97.1-85**	ARANDELA	WASHER, PLATE	RONDELLA	1

F30 & F40 - B, ERA, BEDL, ELHB, BET, ELHC, TR, BWMHT, ELHF, BMHD, A, MLHA, AET, AMHD

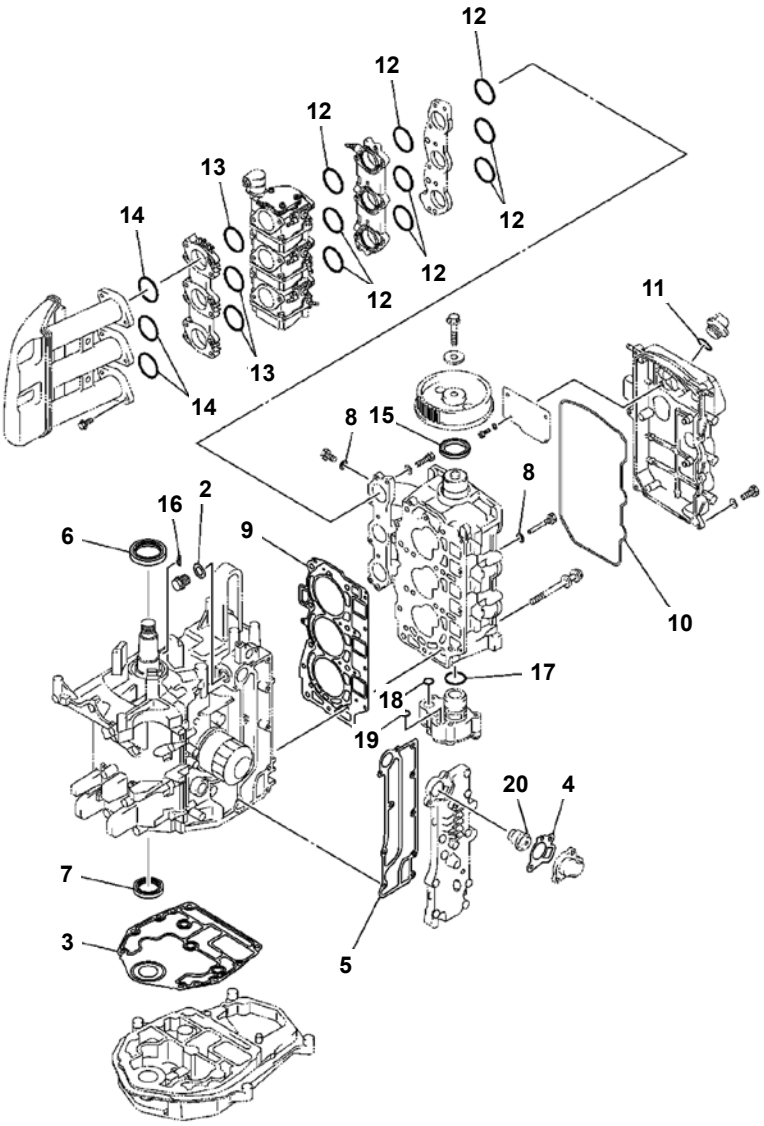

Ref.	R.O.
REC67C-W0001-01	67C-W0001-01

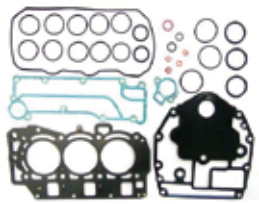

Kit juntas de motor
Power head gasket kit
Kit guarnizione motore

Nº	R.O. OEM	Ref.	Descripción	Description	Descrizione	Cantidad Quanty Quantità
1	67C-W000-01	**REC67C-W0001-01**	KIT JUNTAS	POWER HEAD GASKET KIT	KIT GUARNIZIONI	1
2	90430-14115	**REC90430-14115**	JUNTA	GASKET	GUARNIZIONE	1
3	67C-11351-01	**REC67C-11351-00**	JUNTA BASE MOTOR	GASKET, CYLINDER	GUARNIZIONE BASE MOTORE	1
4	62Y-12414-00	**PAF4-04000011**	JUNTA TERMOSTATO	GASKET, COVER	GUARNIZIONE TERMOSTATO	1
5	67C-41114-10	**REC67C-41114-00**	JUNTA	GASKET, EXHAUST COVER	GUARNIZIONE	1
6	93102-43M42	**REC93102-43M42**	RETÉN	OIL SEAL	PARAOLIO	1
7	93102-35M47	**REC93102-35M47**	RETÉN	OIL SEAL	PARAOLIO	1
8	90430-06014	**REC90430-06014**	JUNTA	GASKET	GUARNIZIONE	4
9	67C-11181-01	**REC67C-11181-01**	JUNTA CULATA	GASKET, CYLINDER HEAD	GUARNIZIONE TESTATA	1
10	67C-11356-00	**REC67C-11356-00**	JUNTA	SEAL, CYLINDER	GUARNIZIONE	1
11	93210-24M79	**PAJASO F404-31-025**	TÓRICA	O-RING	O-RING	2
12	67C-14561-00		TÓRICA	O-RING	O-RING	9
13	67C-14562-00		TÓRICA	O-RING	O-RING	3
14	93210-34MJ6		TÓRICA	O-RING	O-RING	3
15	93102-37M40	**REC93102-37M40**	RETÉN	OIL SEAL	PARAOLIO	1
16	90280-04M06	**PAF25-05000024**	CHAVETA	KEY, WOODRUFF	CHIAVETTA	1
17	93210-33MH2	**REC93210-33MH2**	TÓRICA	O-RING	O-RING	1
18	93210-12MG9	**REC93210-12MG9**	TÓRICA	O-RING	O-RING	1
19	93210-14515	**REC93210-14515**	TÓRICA	O-RING	O-RING	1
20	66M-12411-01	**PAF15-07000031**	TERMOSTATO	THERMOSTAT	TERMOSTATO	1

F100 DET/BET - F80 CED/BET (2007+) - F115 AET/TJR/A

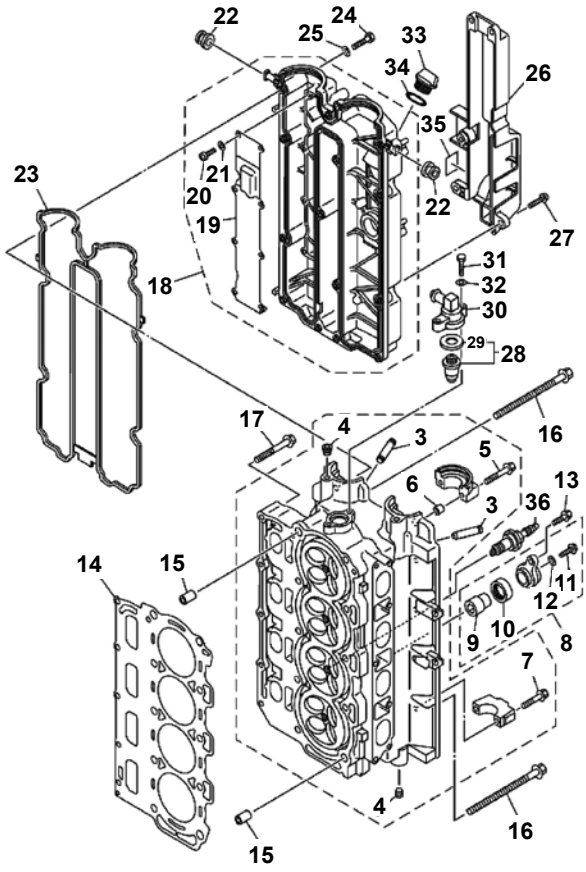

Nº	R.O. OEM	Ref.	Descripción	Description	Descrizione	Cantidad Quanty Quantità
3	67F-11133-10		GUÍA DE VÁLVULA 1	GUIDE VALVE 1	GUIDA VALVOLA 1	16
4	90344-51019		TAPÓN DE TORNILLO AHUSADO	PLUG TAPER SCREW	VITE TAPPO CONICO	4
5	90119-07235		TORNILLO CON ARANDELA	BOLT WITH WASHER	VITE CON RONDELLA	4
6	91809-08006		PASADOR DE CLAVIJA	PIN, DOWEL	SPINOTTO DI CENTRAGGIO	4
7	K0F-A9904-20		TORNILLO CON ARANDELA	BOLT WITH WASHER	VITE CON RONDELLA	16
8	69J-11301-00		CONJUNTO CUBIERTA DE ÁNODO	COVER ANODE	COPERCHIO ANODO	2
9	67F-11325-01	**TEN01146-1**	ÁNODO	ANODE	ANODO	1
10	67F-11328-00		TAPÓN	PLUG	COPERCHIO	1
11	90105-06M07		TORNILLO	BOLT	VITE	1
12	90430-06M03	**REC90430-06M03**	JUNTA	GASKET	GUARNIZIONE	1
13	97575-08540		PERNO CON ARANDELA	BOLT WITH WASHER	PERNO CON RONDELLA	2
14	67F-11181-03	**REC67F-11181-03**	JUNTA, DE CULATA 1	HEAD CYLINDER GASKET 1	GUARNIZIONE TESTATA 1	1
15	90387-10M08		ESPACIADOR	COLLAR	DISTANZIALE	2
16	90105-10M89		TORNILLO	BOLT	VITE	10
17	90119-08M91		TORNILLO CON ARANDELA	BOLT WITH WASHER	VITE CON RONDELLA	5
18	6D8-11191-00-9S		TAPA CULATA DE CILINDRO 1	HEAD CYLINDER COVER 1	COPERCHIO TESTATA CILINDRO 1	1
19	67F-11168-00		CUBIERTA RESPIRADERO	COVER, BREATHER	COPERCHIO SFIATO	1
20	98507-04008		TORNILLO DE CABEZA PLANA	SCREW, PAN HEAD	VITE TESTA PIANA	8
21	92907-04600		ARANDELA	WASHER	RONDELLA	8
22	90480-12072		TAPÓN	PLUG	COPERCHIO	2
23	6D8-11356-01		RETÉN ACEITE CILINDRO 2	SEAL CYLINDER 2	GUARNIZIONE CILINDRO 2	1
24	97095-06030		PERNO	BOLT	PERNO	14
25	92995-06600		ARANDELA	WASHER	RONDELLA	14
26	67F-11192-01		TAPA CULATA DE CILINDRO 2	COVER CYLINDER HEAD	COPERCHIO TESTATA CILINDRO 2	1
27	90159-06M29		TORNILLLO CON VALONA	SCREW WITH WASHER	VITE CON RONDELLA	5
28	67F-12411-01	**REC67F-12411-01**	TERMOSTAT	THERMOSTAT	TERMOSTATO	1
29	67F-12412-00		SELLO TERMOSTATO	SEAL THERMOSTAT	GUARNIZIONE TERMOSTATO	1
30	68V-12413-00-9S		CUBIERTA TERMOSTATO	COVER THERMOSTAT	COPERCHIO TERMOSTATO	1
31	97095-06025		PERNO	PLUG	PERNO	2
32	92995-06600	**PAGB/T97.1-85**	ARANDELA	WASHER	RONDELLA	2
33	6G8-15363-00		TAPÓN DE ACIETE	OIL PLUG	TAPPO DELL'OLIO	1
34	93210-24M79		ANILLO O	O RING	O-RING	1
35	6D8-83626-00		MARCA 6	MARK 6	MARCA 6	1
36	94702-00391	**NGKLFR5A-11**	BUJÍA (NGK LFR5A-11)	PLUG SPARK (NGK LFR5A-11)	CANDELA (NGK LFR5A-11)	4

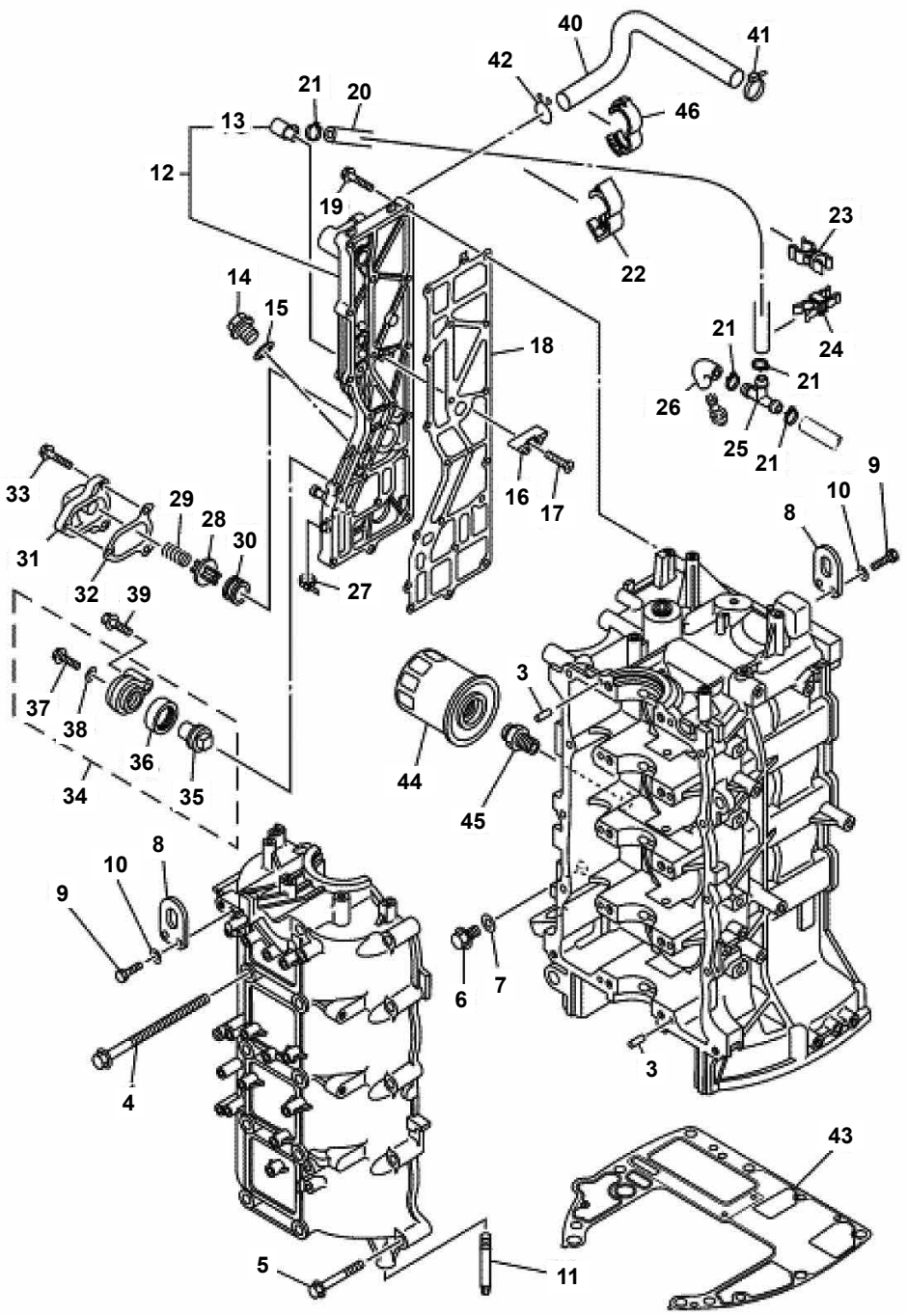
40
41
42
21
20
46
13
12
19
23
22
14
15
18
21
24
21
26
25
21
9
33
29
28
30
16
17
10
8
31
32
39
27
3
37
38
36
44
34
35
45
8
10
9
6
7
4
3
43
5
11

Nº	R.O. OEM	Ref.	Descripción	Description	Descrizione	Cantidad Quanty Quantità
3	93606-12019	**REC93606-12019**	PASADOR DE CLAVIJA	PEG BOLT	SPINOTTO DI CENTRAGGIO	10
4	90119-10M88		TORNILLO CON ARANDELA	BOLT WITH WASHER	VITE CON RONDELLA	10
5	90119-08M66		TORNILLO CON ARANDELA	BOLT WITH WASHER	VITE CON RONDELLA	10
6	90340-14M06		TORNILLO, DE DRENAJE	BOLT WITH WASHER	VITE DRENAGGIO	1
7	90430-14115	**PAF15-04000003**	JUNTA	GASKET	GUARNIZIONE	1
8	62Y-11119-00		SOPORTE DE MOTOR	ENGINE BRACKET	SUPPORTO MOTORE	2
9	97095-06020		PERNO	BOLT	PERNO	4
10	92995-06600	**PAGB/T97.1-85**	ARANDELA	WASHER	RONDELLA	4
11	67F-15142-00		GUÍA 1	GUIDE 1	GUIDA 1	2
12	6D8-41113-30-9S		CUBIERTA EXTERIOR DE ESCAPE	OUTTER COVER EXHAUST	COPERCHIO DI SCARICO	1
13	676-11372-00	**PAF15-04000005**	NIPPLE DE MANGUERA	HOSE NIPPLE	RACCORDO TUBO	1
14	90340-18M09		TORNILLOS DE DRENAJE	PLUG STRAIGHT SCREW	VITI DI DRENAGGIO	1
15	90430-18130		JUNTA	GASKET	GUARNIZIONE	1
16	6E5-11325-00	**TEN01152**	ÁNODO	ANODE	ANODO	3
17	98780-04016		TORNILLO CABEZA PLANA	FLAT HEAD BOLT	VITE TESTA PIANA	3
18	67F-41114-A2		JUNTA	GASKET	GUARNIZIONE	1
19	90119-06MA4		TORNILLO CON ARANDELA	BOLT WITH WASHER	VITE CON RONDELLA	18
20	6D8-42541-00		TUBO 1	HOSE 1	TUBO 1	1
21	90465-11M10		BRIDA	FLANGE	FLANGIA	4
22	90464-18004		BRIDA	FLANGE	FLANGIA	1
23	90464-10010		BRIDA	FLANGE	FLANGIA	1
24	90464-11009		BRIDA	FLANGE	FLANGIA	1
25	688-24378-00	**PAF15-05000011**	TUBO DE UNIÓN 3	PIPE JOINT 3	TUBO DI UNIONE 3	1
26	61A-24316-00		TUBO 6	HOSE 6	TUBO 6	1
27	90465-11M10		BRIDA	FLANGE	FLANGIA	1
28	6G5-12416-00		VÁLVULA DE CONTROL DE PRESIÓN	VALVE PRESS CONTROL	VALVOLA CONTROLLO PRESSIONE	1
29	90501-16M11		RESORTE DE COMPRESIÓN	SPRING COMPRESSION	MOLLA DI COMPRESSIONE	1
30	90480-20M05		TAPÓN	PLUG	COPERCHIO	1
31	67F-1246A-01-9S		CUBIERTA 1	COVER 1	COPERCHIO 1	1
32	67F-12435-A0		JUNTA	GASKET	GUARNIZIONE	1
33	90119-06MA2		TORNILLO CON ARANDELA	BOLT WITH WASHER	VITE CON RONDELLA	3
34	69J-11301-00		CONJUNTO CUBIERTA DE ÁNODO	ANODE COVER GROUP	COPERCHIO ANODO	1
35	67F-11325-01	**CM67F-11325-00**	ÁNODO	ANODE	ANODO	1
36	67F-11328-00		TAPÓN	PLUG	COPERCHIO	1
37	90105-06M07		TORNILLO	BOLT	VITE	1
38	90430-06M03	**REC90430-06M03**	JUNTA	GASKET	GUARNIZIONE	1
39	97575-08540		PERNO CON ARANDELA	BOLT WITH WASHER	PERNO CON RONDELLA	1
40	67F-1243A-00		TUBO 1	HOSE 1	TUBO 1	1
41	90465-11M10		BRIDA	FLANGE	FLANGIA	1
42	90467-20M15		CLIP	CLIP	CLIP	1
43	68V-11351-00	**REC68V-11351-00**	JUNTA DE CILINDRO	CYLINDER GASKET	GUARNIZIONE CILINDRO	1
44	5GH-13440-00	**REC5GH-13440-00**	ELEMENTO FILTRO DE ACEITE	FILTER OIL ELEMENT	FILTRO DELL'OLIO	1
45	90401-20007		PERNO DE UNIÓN	BOLT UNION	PERNO DI UNIONE	1
46	90464-16001		BRIDA	FLANGE	FLANGIA	1

4ACMH - 4A - 4AS - 4MSH - 4KZ 4AC - 5C - 5CS - 5ACMH

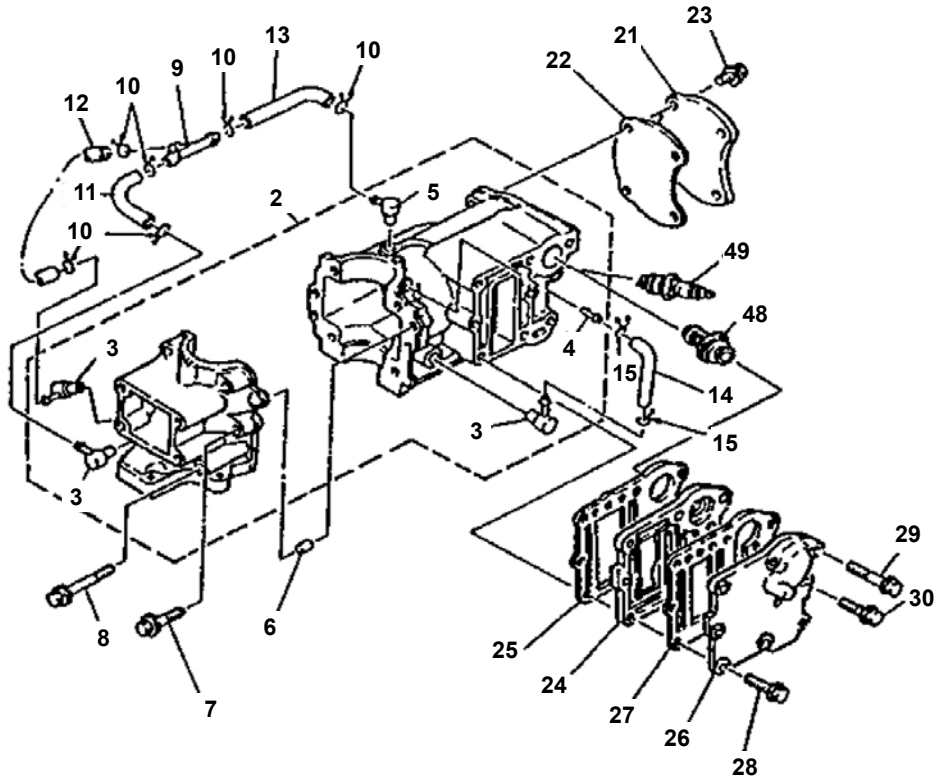

Nº	R.O. OEM	Ref.	Descripción	Description	Descrizione	Cantidad Quanty Quantità
3	650-11370-00, -01	**REC650-11370-00**	VÁLVULA	CHECK VALVE ASSY	VALVOLA	3
4	624-14485-00		JUNTA	PIPE, JOINT	GUARNIZIONE	1
5	6E5-11372-00		RACORD TUBO	NIPPLE, HOSE	RACCORDO TUBO	1
6	93606-12019	**GLM12808**	PIN CENTRADOR	PIN, DOWEL	SPINOTTO CENTRAGGIO	2
7	90105-06M16		TORNILLO	BOLT, FLANGE	VITE	4
8	90105-06M17		TORNILLO	BOLT, FLANGE	VITE	2
9	6E0-24378-00		JUNTA	PIPE, JOINT 4	GUARNIZIONE	1
10	90467-06016		CLIP ABRAZADERA	CLIP	CLIP FASCETTA	5
11	90445-07M00		TUBO	HOSE (L100)	TUBO	1
12	90445-07M28	**REC90445-07M28**	TUBO	HOSE (L70)	TUBO	1
13	90445-07M32		TUBO	HOSE (L120)	TUBO	1
14	90445-07M28	**REC90445-07M28**	TUBO	HOSE (L70)	TUBO	1
15	90467-06016		CLIP ABRAZADERA	CLIP	CLIP FASCETTA	2
21	6E0-11191-01-1S		TAPA	COVER, CYLINDER HEAD	COPERCHIO	1
	6E3-11191-01-1S		TAPA	COVER, CYLINDER HEAD	COPERCHIO	1
22	6E0-11193-A1	**REC6E0-11193-A1**	JUNTA TAPA	GASKET, HEAD COVER	GUARNIZIONE TAPPO	1
23	90105-06M14		TORNILLO	BOLT, FLANGE	VITE	4
24	6E0-41111-01-1S		PLACA	INNER COVER, EXHAUST	PIASTRA	1
	6E3-41111-01-1S		PLACA	INNER COVER, EXHAUST (5C ENGINE)	PIASTRA	1
25	6E0-41112-A1	**REC6E0-41112-A1**	JUNTA ESCAPE	GASKET, EXHA COVER	GUARNIZIONE SCARICO	1
26	6E0-41113-01-1S		TAPA ESCAPE	OUTER COVER, EXHAUST	COPERCHIO SCARICO	1
	6E3-41113-01-1S		TAPA ESCAPE	OUTER COVER, EXHAUST	COPERCHIO SCARICO	1
27	6E0-41114-A1	**REC6E0-41114-A1**	JUNTA ESCAPE	GASKET, EX COVER	GUARNIZIONE SCARICO	1
28	90105-06M24		TORNILLO	BOLT, FLANGE	VITE	7
29	90105-06M16		TORNILLO	BOLT, FLANGE	VITE	1
30	90105-06M14		TORNILLO	BOLT, FLANGE	VITE	1
46	6E5-12411-01	**REC6E5-12411-02**	TERMOSTATO	THERMOSTAT	TERMOSTATO	1
49	94702-00272	**NGKBR7HS**	BUJÍA	SPARKPLUG	CANDELA	1

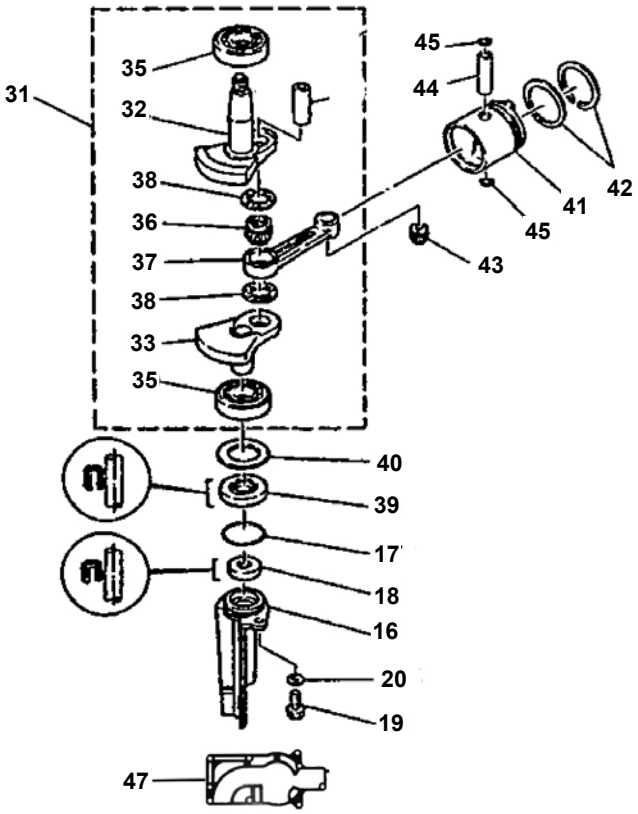

Nº	R.O. OEM	Ref.	Descripción	Description	Descrizione	Cantidad Quanty Quantità
16	6E0-15396-03-5B		CUERPO RETÉN	HOUSING, OIL SEAL	GUARNIZIONE CORPO	1
17	93210-31MJ5		ARO TÓRICO	O-RING	O-RING	1
18	93101-10M25	**REC93101-10M25**	RETÉN	OIL SEAL	PARAOLIO	1
19	97095-06016		TORNILLO	BOLT	VITE	1
20	92995-06600		ARANDELA	WASHER	RONDELLA	1
31	6E0-11400-00		CIGÜEÑAL COMPLETO	CRANKSHAFT	ALBERO MOTORE COMPLETO	1
32	6E0-11412-00		PARTE 1 CIGÜEÑAL	CRANK 1	ALBERO MOTORE PARTE 1	1
33	6E0-11422-00		PARTE 2 CIGÜEÑAL	CRANK 2	ALBERO MOTORE PARTE 2	1
34	6G1-11681-00	**REC6G1-11681-00**	PASADOR	PIN, CRANK 1	SPINOTTO	1
35	93306-204U0	**REC93306-204U0**	RODAMIENTO	BEARNIG	CUSCINETTO	2
36	93310-418V1	**REC93310-418V1**	RODAMIENTO	BEARING	CUSCINETTO	1
37	6E0-11651-01	**REC6E0-11651-01**	BIELA	ROD, CONNECTING	BIELLA	1
38	90209-18112	**REC90209-18112**	ARANDELA	WASHER	RONDELLA	2
39	93101-20M29	**REC93101-20M29**	RETÉN	OIL SEAL	PARAOLIO	1
40	90201-32M48		ARANDELA	WASHER, PLATE	RONDELLA	1
41	6E0-11631-00-98	**REC6E0-11631-00-98**	PISTÓN	PISTON (STD)	PISTONE	1
	6E3-11631-00-98		PISTÓN	PISTON (STD) (5C ENGINES)	PISTONE	1
42	6G1-11610-00	**REC6G1-11610-00**	SEGMENTOS PISTÓN	PISTON RING (STD)	FASCE PISTONE	1
	6J1-11610-00	**REC6J1-11610-00**	SEGMENTOS PISTÓN	PISTON RING (STD) (5C ENGINES)	FASCE PISTONE	1

RECAMBIOS MARINOS S.L.

6CMH - 6CWH - 6MSH - 6DMH - 6MH - 6D
8D - 8CMH - 8CWH - 8MSH - 8MH

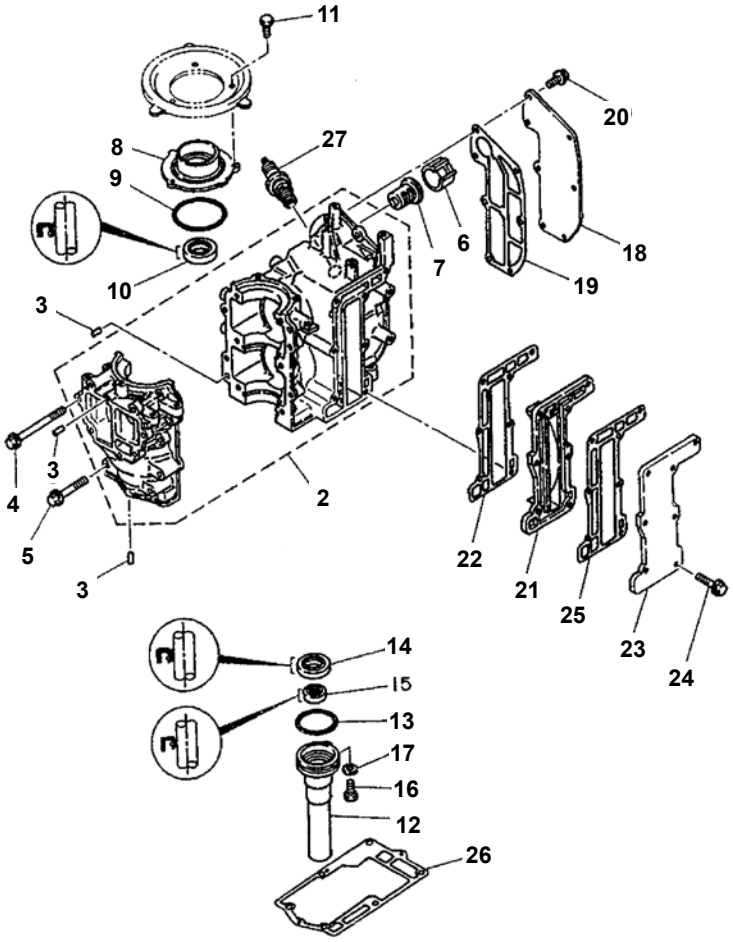

Nº	R.O. OEM	Ref.	Descripción	Description	Descrizione	Cantidad Quanty Quantità
3	93604-08062		PIN CENTRADOR	PIN, DOWEL	SPINOTTO CENTRAGGIO	4
4	90105-06M26		TORNILLO	BOLT, FLANGE	VITE	6
5	90105-06M25		TORNILLO	BOLT, FLANGE	VITE	4
6	90387-22M50		CASQUILLO	COLLAR	COPERCHIO	1
7	6E5-12411-01	**REC6E5-12411-02**	TERMOSTATO	THERMOSTAT	TERMOSTATO	1
8	6G1-15359-01-94		CUERPO RETÉN	HOUSING, OIL SEAL	CORPO GUARNIZIONE	1
9	93210-54M54	**REC93210-54M54**	ARO TÓRICO	O-RING	O-RING	1
10	93102-20M25	**REC93102-20M25**	RETÉN	OIL SEAL	PARAOLIO	1
11	97013-06016		TORNILLO	BOLT	VITE	3
12	6G1-15396-02-5B		CUERPO RETÉN	HOUSING, OIL SEAL	CORPO GUARNIZIONE	1
13	93210-42159	**REC93210-42159**	ARO TÓRICO	O-RING	O-RING	1
14	93101-20M34	**REC93101-20M34**	RETÉN	OIL SEAL	PARAOLIO	1
16	97095-06016		TORNILLO	BOLT	VITE	1
17	92995-06600		ARANDELA	WASHER	RONDELLA	1
18	6N0-E1191-00-9M		TAPA	COVER CYLINDER HEAD	COPERCHIO	1
19	6G1-11193-A1	**REC6G1-11193-A1**	JUNTA TAPA TERMOSTATO	GASKET THERMOSTAT COVER	GUARN. COPERCHIO TERMOSTATO	1
20	90105-06M14		TORNILLO	BOLT, FLANGE	VITE	7
21	6N0-G1111-00-9M		PLACA	INNER COVER, EXHAUST	PIASTRA	1
22	6G1-41112-A1	**REC6G1-41112-A1**	JUNTA ESCAPE	GASKET, EXHAUST INNER COVER	GUARNIZIONE SCARICO	1
23	6G1-41113-01-9M		TAPA	OUTER COVER, EXHAUST	COPERCHIO	1
24	90105-06M24		TORNILLO	BOLT, FLANGE	VITE	7
25	6G1-41114-A0	**REC6G1-41114-A0**	JUNTA ESCAPE	GASKET, EXHAUST OUTER COVER	GUARNIZIONE SCARICO	1
26	6G1-45113-A1	**REC6G1-45113-A1**	JUNTA BASE	GASKET, UPPER CASING	GUARNIZIONE BASE	1
27	94702-00271	**NGKBR7HS-10**	BUJÍA	PLUG, SPARK (NGK BR7HS-10)	CANDELA	2
27	94702-00274	**NGKBR6HS-10**	BUJÍA	PLUG, SPARK (NGK BR6HS-10) (6C ENGINES)	CANDELA	2

6CMH - 6CWH - 6MSH - 6DMH - 6MH - 6D
8D - 8CMH - 8CWH - 8MSH - 8MH

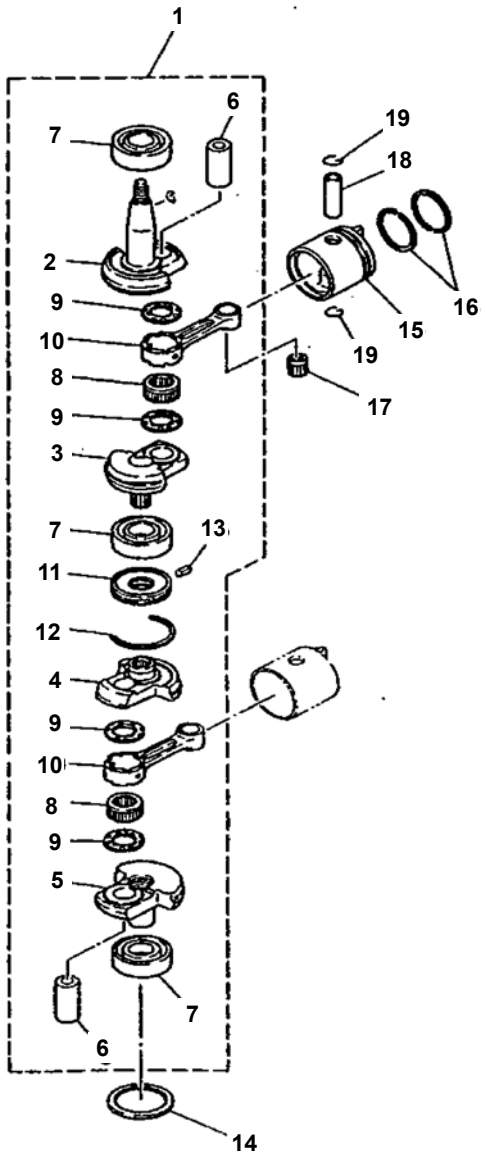

Nº	R.O. OEM	Ref.	Descripción	Description	Descrizione	Cantidad Quanty Quantità
1	6N0-E1400-00		CIGÜEÑAL	CRANKSHAFT ASSY	ALBERO MOTORE	1
2	6N0-E1412-00		PARTE 1 CIGÜEÑAL	CRANK 1	ALBERO MOTORE PARTE 1	1
3	6N0-E1422-00		PARTE 2 CIGÜEÑAL	CRANK 2	ALBERO MOTORE PARTE 2	1
4	6N0-E1432-00		PARTE 3 CIGÜEÑAL	CRANK 3	ALBERO MOTORE PARTE 3	1
5	6N0-E1442-00		PARTE 4 CIGÜEÑAL	CRANK 4	ALBERO MOTORE PARTE 4	1
6	6G1-11681-00	**REC6G1-11681-00**	BULÓN	PIN, CRANK 1	SPINOTO	2
7	93306-204U0	**REC93306-204U0**	RODAMIENTO	BEARING	CUSCINETTO	3
8	93310-418V1	**REC93310-418V1**	RODAMIENTO	BEARING	CUSCINETTO	2
9	90209-18112	**REC90209-18112**	ARANDELA	WASHER	RONDELLA	4
10	6N0-E1651-00		BIELA	ROD, CONNECTING	BIELLA	2
11	6N0-E1515-00		ARO	SEAL, LABYRINTH	FASCIA	1
12	93440-47055		CIRCLIP	CIRCLIP	CLIP CHIUSURA	1
13	91609-20008		PIN	PIN, SPRING	SPINOTTO	1
14	90201-41303		ARANDELA	WASHER, PLATE	RONDELLA	1
15	6N0-E1631-00-64		PISTÓN	PISTON (STD)	PISTONE	2
16	6N0-E1603-00		SEGMENTOS	PISTON RING SET (STD)	FASCE	2
17	93310-112V0	**REC93310-112V0**	RODAMIENTO	BEARING	CUSCINETTO	2
18	6N0-E1633-00		BULÓN	PIN, PISTON	SPINOTTO	2
19	93450-13022	**REC93450-13022**	CIERRE	CIRCLIP	CLIP CHIUSURA	4

RECAMBIOS MARINOS S.L.

E8D - E8DMH

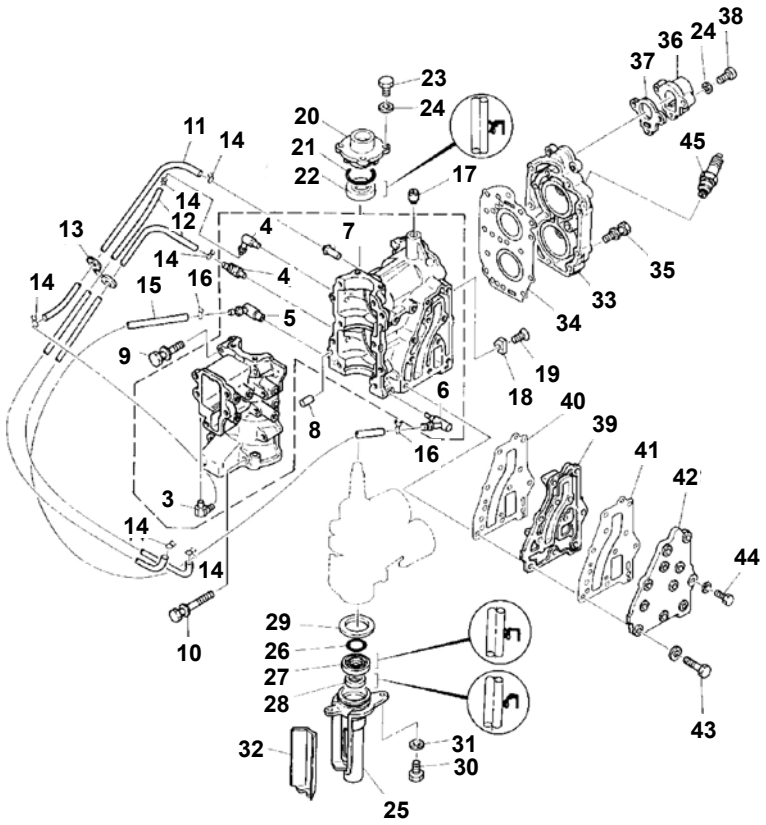

Nº	R.O. OEM	Ref.	Descripción	Description	Descrizione	Cantidad Quanty Quantità
3	650-11370-01	**REC650-11370-00**	VÁLVULA DE CONTROL COMPL.	CHECK VALVE ASSY	VALVOLA DI CONTROLLO COMPL.	1
4	646-11370-01		VÁLVULA DE CONTROL COMPL.	CHECK VALVE ASSY	VALVOLA DI CONTROLLO COMPL.	2
5	677-11372-00		NIPPLE DE MANGUERA	NIPLE, HOSE	RACCORDO TUBO	1
6	676-11372-00		NIPPLE DE MANGUERA	NIPLE, HOSE	RACCORDO TUBO	1
7	624-14485-00		TUBO DE UNIÓN	PIPE JOINT	TUBO DI UNIONE	1
8	93605-08041		PASADOR DE CLAVIJA	PIN, DOWEL	PERNO PASSANTE	2
9	90119-06M15		TORNILLO CON ARANDELA	BOLT, WITH WASHER	VITE CON RONDELLA	8
10	90119-06M16		TORNILLO CON ARANDELA	BOLT, WITH WASHER	VITE CON RONDELLA	2
11	90445-07M02	**REC90445-07M28**	TUBO (L167),	HOSE (L167)	TUBO (L167),	1
12	90445-07258		TUBO (L200),	HOSE (L200)	TUBO (L200),	2
13	90464-07015		BRIDA	CLAMP	FLANGIA	1
14	90467-06016		PRESILLA	CLIP	CLIP	6
15	90445-10M03		TUBO (L240),	HOSE (L240)	TUBO (L240),	1
16	90467-09M09		PRESILLA	CLIP	CLIP	2
17	99530-10014		PASADOR, DE ESPIGA	PIN, DOWEL	PERNO PASSANTE	1
18	664-11325-00	**REC664-11325-00**	ÁNODO	ANODE	ANODO	1
19	90151-06M01		TORNILLO EMBUTIDO	SCREW, COUNTERUNK	VITE SVASATA	1
20	677-15359-00-94		CAJA DE SELLO DE ACEITE	HOUSING, OIL SEAL	ALLOGGIAMENTO PARAOLIO	1
21	93210-42159	**REC93210-42159**	ANILLO O	O-RING	O-RING	1
22	93102-20M25	**REC93102-20M25**	SELLO ACEITE	OIL SEAL	PARAOLIO	1
23	97095-06018		PERNO	BOLT	PERNO	4
24	92995-06600		ARANDELA	WASHER	RONDELLA	4
25	677-15396-01-5B		CAJA DE SELLO ACEITE	HOUSING, OIL SEAL	ALLOGGIAMENTO PARAOLIO	1
26	93210-42M70	**REC93210-42M70**	ANILLO O	O RING	O-RING	1
27	93101-20M29	**REC93101-20M29**	SELLO ACEITE	OIL SEAL	PARAOLIO	1
28	93101-14M01	**REC93101-14M01**	SELLO ACEITE	OIL SEAL	PARAOLIO	1
29	90201-41303		ARANDELA PLANA	WASHER, PLATE	RONDELLA PIANA	1
30	97095-06016		PERNO	BOLT	PERNO	2
31	92995-06600		ARANDELA	WASHER	RONDELLA	2
32	677-15379-02		SELLO DE CARTER	SEAL, CRANKCASE	SIGILLO CARTER	1
33	677-11111-00-1S		CULATA CILINDRO 1	HEAD, CYLINDER	TESTATA CILINDRO 1	1
34	677-11181-A1	**REC677-11181-A0**	JUNTA DE CULATA 1	GASKET, CYLINDER HEAD	GUARNIZIONE TESTATA 1	1
35	90119-06048		TORNILLO CON ARANDELA 1	BOLT, WITH WASHER	VITE CON RONDELLA 1	3
36	677-12413-00-1S		CUBIERTA TERMOSTATO	COVER,THERMOSTAT	COPERCHIO TERMOSTATO	1
37	677-12414-A1		EMPAQUE	GASKET, COVER	COPERCHIO	1
38	90119-06MA3		TORNILLO CON ARANDELA	BOLT, WITH WASHER	VITE CON RONDELLA	3
39	677-41111-01-1S		CUBIERTA INT. ESCAPE	NNER COVER, EXHAUST	COPERCHIO INT. SCATICO	1
40	677-41112-A1	**REC677-41112-A0**	EMPAQUE	GASKET, EXHAUST INNER COVER	COPERCHIO	1
41	677-41114-A1	**REC677-41114-A1**	EMPAQUE	GASKET, EXHAUST OUTER COVER	COPERCHIO	1
42	677-41113-01-1S		CUBIERTA EXT. DE ESCAPE	OUTER COVER, EXHAUST	COPERCHIO EST. SCARICO	1
43	90119-06MA4		TORNILLO CON ARANDELA	BOLT, WITH WASHER	VITE CON RONDELLA	10
44	90119-06023		TORNILLO CON ARANDELA	BOLT, WITH WASHER	VITE CON RONDELLA	1
45	94702-00217	**NGKB7HS-10**	BUJÍA (NGK B7HS-10)	PLUG, SPARK (NGK B7HS-10)	CANDELA (NGK B7HS-10)	2

E8D - E8DMH

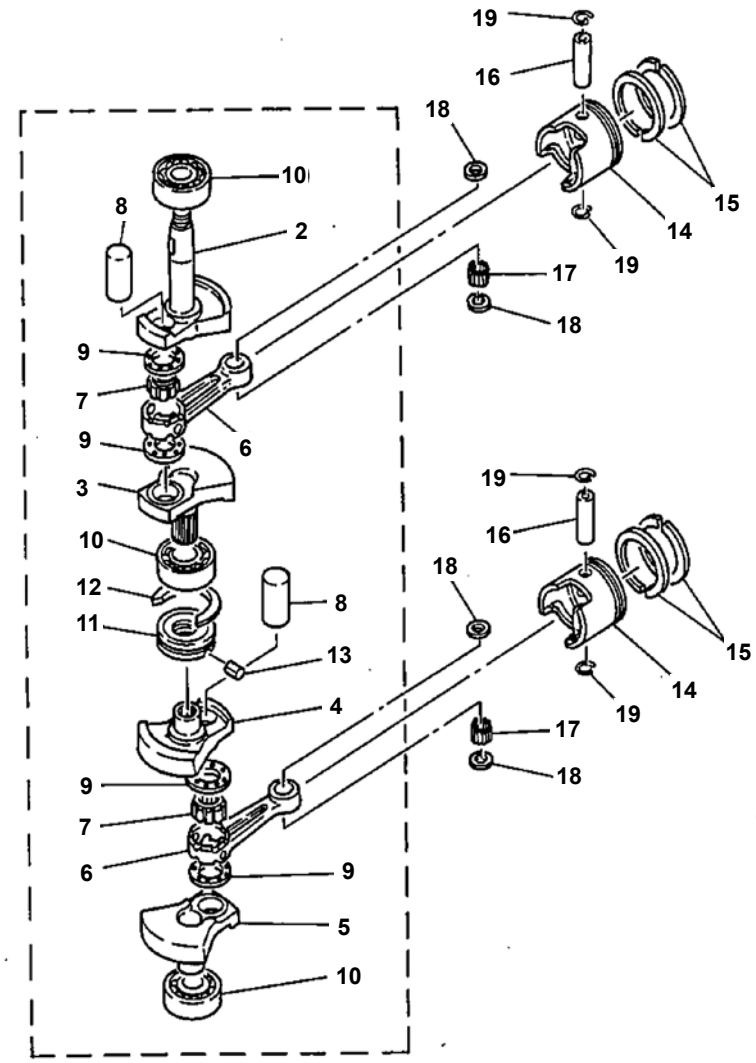

Nº	R.O. OEM	Ref.	Descripción	Description	Descrizione	Cantidad Quanty Quantità
2	677-11412-02	**REC677-11412-00**	CIGÜEÑAL 1	CRANK 1	LEVA 1	1
3	677-11422-02	**REC677-11422-00**	CIGÜEÑAL 2	CRANK 2	LEVA 2	1
4	677-11432-02	**REC677-11432-00**	CIGÜEÑAL 3	CRANK 3	LEVA 3	1
5	677-11442-02	**REC677-11442-00**	CIGÜEÑAL 4	CRANK 4	LEVA 4	1
6	6E0-11651-01	**REC6E0-11651-01**	BIELA	ROD, CONNECTING	BIELLA	2
7	93310-418U0	**REC93310-418U0**	RODAMIENTO	BEARING	GABBIA A RULLI	2
8	6G1-11681-00	**REC6G1-11681-00**	PIN, CIGÜEÑAL 1	PIN, CRANK 1	SPINOTTO LEVA 1	2
9	90209-18112	**REC90209-18112**	ARANDELA	WASHER	RONDELLA DI SEPARAZIONE	4
10	93306-204U0	**REC93306-204U0**	RODAMIENTO	BEARING	CUSCINETTO	3
11	677-11515-01		RETÉN	LABERINTH SEAL	TENUTA CHIUSA	1
12	93440-47055		CLIP	CIRCLIP	CLIP CHIUSURA	1
13	91690-30010		PIN, MUELLE	PIN, SPRING	SPINOTTO DELLA MOLLA	1
14	677-11631-00-97	**REC677-11631-00K**	PISTÓN (STD)	PISTON (STD)	PISTONE (STD)	2
	677-11635-00	**REC677-11635-00K**	PISTÓN (0.25mm O/S)	PISTON (0.25mm O/S)	PISTONE (0.25mm O/S)	2
	677-11636-00	**REC677-11636-00K**	PISTÓN (0.50mm O/S)	PISTON (0.50mm O/S)	PISTONE (0.50mm O/S)	2
15	647-11610-00	**REC647-11610-00**	SET AROS PISTÓN (STD)	PISTON RING SET (STD)	SERIE FASCE (STD)	2
	647-11610-10	**REC647-11610-10**	SET AROS PISTÓN (0.25mm O/S)	PISTON RING SET (0.25mm O/S)	FASCE (0.25mm O/S)	2
	647-11610-20	**REC647-11610-20**	SET AROS PISTON (0.50mm O/S)	PISTON RING SET (0.50mm O/S)	FASCE (0.50mm O/S)	2
16	6G1-11633-00	**REC6G1-11633-00**	PIN, PISTON	PIN, PISTON	SPINOTTO, PISTONE	2
17	93602-14118	**REC93602-14118**	RODAMIENTOS	BEARING	CUSCINETTO	56
18	90201-12565	**REC90201-12565**	WASHER, PLATE	WASHER, PLATE	RONDELLA PIANA	4
19	93450-13022	**REC93450-13022**	CIRCLIP	CIRCLIP	CLIP CHIUSURA	4

RECAMBIOS MARINOS S.L.

9.9F/FM/FEM/MHV - FMH/MSH - 13.5AMH
15F/FEM/FM/MH/MSH - FW/MHH

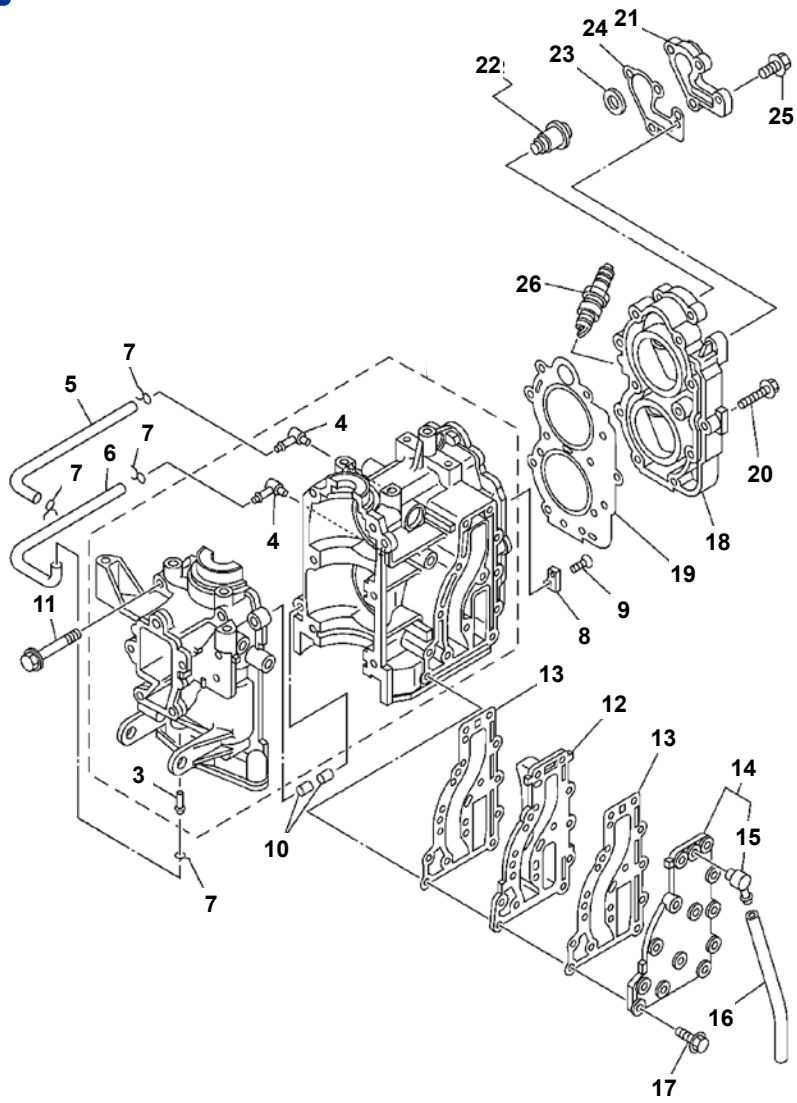

Nº	R.O. OEM	Ref.	Descripción	Description	Descrizione	Cantidad Quanty Quantità
3	624-14485-00		TOMA	PIPE JOINT	GIUNTO PER TUBO	1
4	650-14485-03		TOMA	PIPE JOINT	GIUNTO PER TUBO	2
5	90445-07M08		TUBO	HOSE (L220)	TUBO	1
6	90445-07M08		TUBO	HOSE (L220)	TUBO	1
7	90467-06016		ABRAZADERA	CLIP	FASCETTA	4
8	682-11325-00	**CM682-11325-00**	ÁNODO ZINC	ZINC ANODE	ANODO ZINCO	1
9	98780-05015		TORNILLO	SCREW, FLAT HEAD	VITE	1
10	93606-12019	**GLM12808**	PIN CENTRADOR	PIN, DOWEL	SPINOTTO CENTRAGGIO	2
11	90119-08M07		TORNILLO	BOLT, WITH WASHER	VITE	6
12	63V-41111-00-1S		PLACA	INNER COVER, EXHAUST	PIASTRA	1
13	63V-41112-A0	**REC63V-41112-A0**	JUNTA TAPA	GASKET COVER	GUARNIZIONE COPERCHIO	2
14	63V-41113-00-1S		TAPA	OUTER COVER, EXHAUST	COPERCHIO	1
15	676-11372-00	**PAF15-04000005**	CONEXIÓN	NIPPLE HOSE	TUBO	1
16	90445-09105		TUBO	HOSE (L300)	TUBO	1
17	90119-06MA4		TORNILLO	BOLT, WITH WASHER	VITE	13
18	6E7-11111-01-1S		CULATA	HEAD CYLINDER 1	TESTATA	1
19	63V-11181-A2	**REC63V-11181-A1**	JUNTA CULATA	GASKET HEAD	GUARNIZIONE TESTATA	1
20	90105-07002		TORNILLO	BOLT, FLANGE	VITE	11
21	682-12413-00-1S		TAPA TERM	COVER, THERMOSTAT	COPERCHIO TERMOSTATO	1
22	6E5-12411-30	**REC6E5-12411-30**	TERMOSTATO	THERMOSTAT	TERMOSTATO	1
23	90201-16M03		ARANDELA	WASHER, PLATE	RONDELLA	1
24	682-12414-A1	**REC682-12414-A1**	JUNTA TAPA	GASKET, COVER	GUARNIZIONE COPERCHIO	1
25	90119-06MA2		TORNILLO	BOLT, WITH WASHER	VITE	4
26	94702-00271	**NGKB7HS-10**	BUJÍA	PLUG, SPARK (NGK B7HS-10)	CANDELA	2

9.9F/FM/FEM/MHV - FMH/MSH - 13.5AMH
15F/FEM/FM/MH/MSH - FW/MHH

2 TIEMPOS STROKES

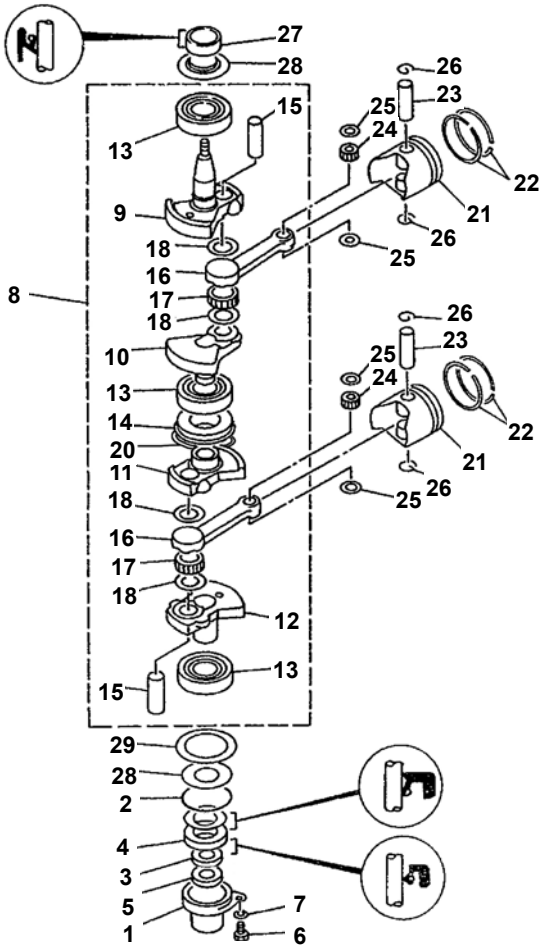

Nº	R.O. OEM	Ref.	Descripción	Description	Descrizione	Cantidad Quanty Quantità
1	624-14485-00		CUERPO RETÉN	HOUSING, OIL SEAL	CORPO GUARNIZIONE	1
2	93210-46M16	**REC93210-46M16**	ARO TÓRICO	O-RING	O-RING	1
3	93101-25018	**REC93101-25018**	RETÉN	OIL SEAL	PARAOLIO	1
4	93102-25M48	**REC93102-25M48**	RETÉN	OIL SEAL	PARAOLIO	1
5	93101-13018	**REC93101-13018**	RETÉN	OIL SEAL	PARAOLIO	2
6	97095-06016		TORNILLO	BOLT	VITE	1
7	92995-06600	**PAGB/T97.1-85**	ARANDELA	WASHER	RONDELLA	1
8	63V-11400-01		CIGÜEÑAL	CRANKSHAFT ASSY	ALBERO MOTORE	1
9	63V-11412-00	**REC63V-11412-00**	PARTE 1 CIGÜEÑAL	CRANK 1	PARTE 1 ALBERO MOTORE	1
10	63V-11422-00	**REC63V-11422-00**	PARTE 2 CIGÜEÑAL	CRANK 2	PARTE 2 ALBERO MOTORE	1
11	63V-11432-00	**REC63V-11432-00**	PARTE 3 CIGÜEÑAL	CRANK 3	PARTE 3 ALBERO MOTORE	1
12	63V-11442-00	**REC63V-11442-00**	PARTE 4 CIGÜEÑAL	CRANK 4	PARTE 4 ALBERO MOTORE	1
13	93306-20U7	**REC93306-205U7**	RODAMIENTO	BEARING	CUSCINETTO	3
14	63V-11515-02	**REC63V-11515-02**	ARILLO	SEAL, LABYRINTH 1	GUARNIZIONE	1
15	682-11681-00	**REC682-11681-00**	BULÓN	PIN, CRANK 1	SPINOTTO	2
16	650-11651-00	**REC650-11651-00**	BIELA	ROD CONNECTING	BIELLA	2
17	93310-620V5	**REC93310-620V5**	RODAMIENTO	BEARING	CUSCINETTO	2
18	90209-20M23	**REC90209-20M23**	ARANDELA	WASHER	RONDELLA	4
19	91609-20008		PIN	PIN, SPRING	SPINOTTO	1
20	93440-52009	**REC93440-52009**	CERCLIP	CIRCLIP	CLIP CHIUSURA	1
21	6E7-11631-00-97	**REC6E7-11631-00K**	PISTÓN	PISTON (STD)	PISTONE	2
	6E7-11635-00	**REC6E7-11635-00K**	PISTÓN	PISTON (0.25mm O/S)	PISTONE	2
	6E7-11636-00	**REC6E7-11636-00K**	PISTÓN	PISTON (0.50mm O/S)	PISTONE	2
22	682-11610-01	**REC682-11610-01**	SEGMENTOS	RING SET (STD)	FASCE	2
	682-11610-11	**REC682-11610-11**	SEGMENTO	RING SET (0.25mm O/S)	SEGMENTO	2
	682-11610-21	**REC682-11610-21**	SEGMENTO	RING SET (0.50mm O/S)	SEGMENTO	2
23	634-11633-00	**REC634-11633-00**	BULÓN	PIN, PISTON	SPINOTTO	2
24	93602-14104	**REC93602-14104**	AGUJA RODAMIENTO	PIN, DOWEL	SPILLO CUSCINETTO	50
25	90201-14377	**REC90201-14377**	ARANDELA	WASHER, PLATE	RONDELLA	4
26	93450-15023	**REC93450-15023**	CIERRE	CIRCLIP	CLIP CHIUSURA	4
27	93110-23M00	**REC93110-23M00**	RETÉN	OIL SEAL	PARAOLIO	1
28	63V-11445-00	**REC63V-11445-00**	ARANDELA ESPACIADORA	SPACER	RONDELLA DI SPESSORE	2
29	90201-46M29	**REC90201-46M29**	ARANDELA	WASHER, PLATE	RONDELLA	1

RECAMBIOS MARINOS S.L.

25B/BMH/BWH/VE/B07 - E25 BMH/HMH
30 G/HMH/W/HWL/HWC - E30 HMH

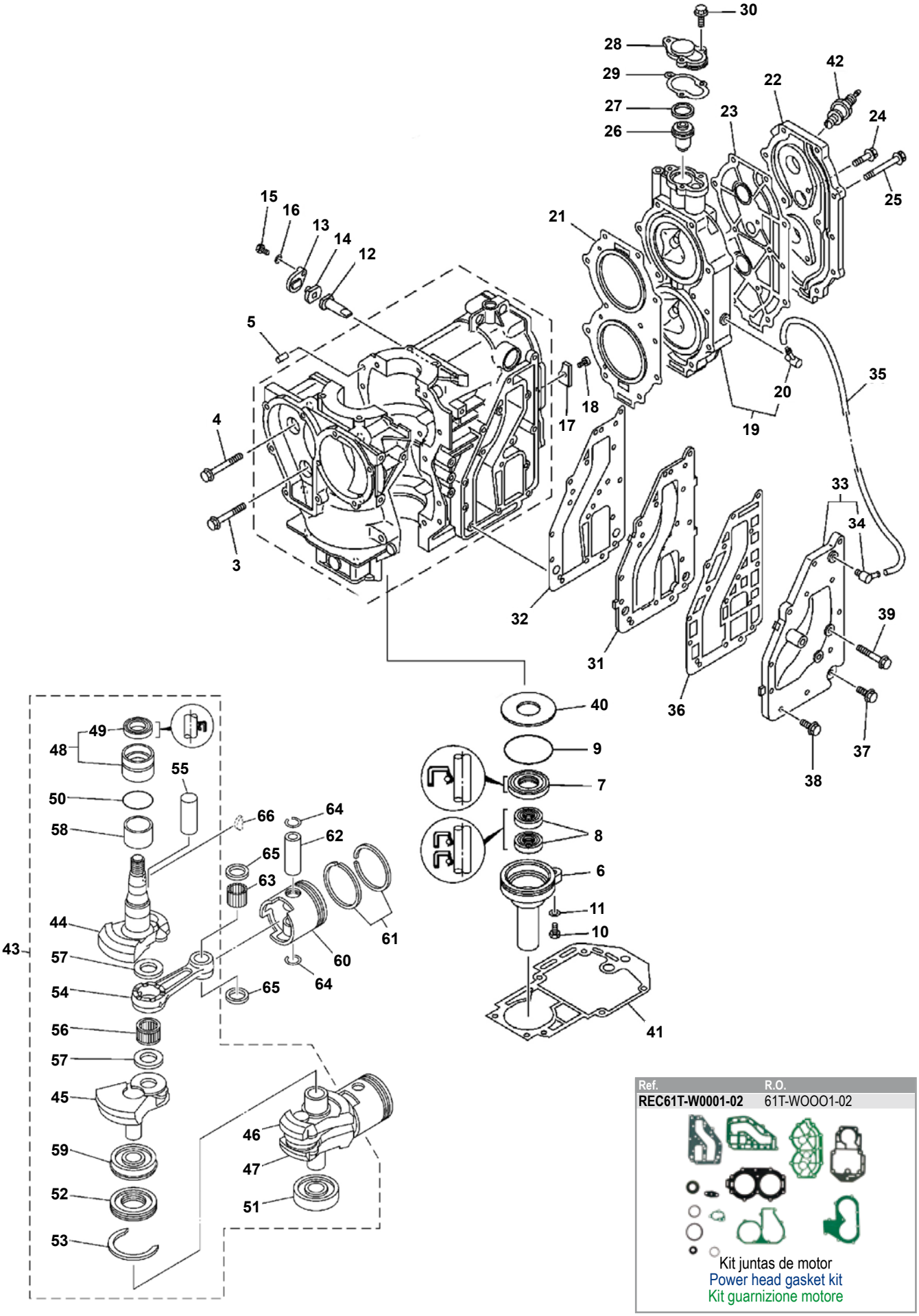

Ref.	R.O.
REC61T-W0001-02	61T-WOOO1-02

Kit juntas de motor
Power head gasket kit
Kit guarnizione motore

Nº	R.O. OEM	Ref.	Descripción	Description	Descrizione	Cantidad Quanty Quantità
3	90119-08009		TORNILLO	BOLT, WITH WASHER	VITE	2
4	90119-08M65		TORNILLO	BOLT, WITH WASHER	VITE	8
5	93606-12019	**PAF15-00000006**	PIN CENTRADOR	PIN, DOWEL	SPINOTTO CENTRAGGIO	2
6	689-15396-01-5B		CUERPO RETÉN	HOUSING OIL SEAL	CORPO GUARNIZIONE	1
7	93102-25008	**REC93102-25008**	RETÉN	OIL SEAL	PARAOLIO	1
8	93101-16001	**REC93101-16001**	RETÉN	OIL SEAL	PARAOLIO	2
9	93210-58M21	**REC93210-58M21**	ARO TÓRICO	O-RING	O-RING	1
10	97095-06022		TORNILLO	BOLT	VITE	1
11	92995-06600	**PAGB/T97.1-85**	ARANDELA	WASHER	RONDELLA	1
12	6J8-11325-00	**CM6J8-11325-00**	ÁNODO ZINC	ANODE	ANODO	1
13	6H3-11327-00-94		TAPA	COVER, ANODE	COPERCHIO ANODO	1
14	6H3-11328-00		JUNTA ANODO	GROMMET, ANODE	GUARNIZIONE ANODO	1
15	97013-06016		TORNILLO	BOLT	VITE	1
16	92903-06600		ARANDELA	WASHER, PLATE	RONDELLA	1
17	689-11325-00	**CM689-11325-00**	ÁNODO ZINC	ANODE	ANODO	1
18	90151-06M02		TORNILLO	SCREW, COUNTERSUNK	VITE	1
19	61N-11111-01-1S		CULATA	HEAD CYLINDER (25MH ENGINES)	TESTATA	1
	61T-11111-01-1S		CULATA	HEAD CYLINDER	TESTATA	1
20	676-11372-00	**PAF15-04000005**	RACORD	NIPPLE HOSE	RACCORDO	1
21	61N-11181-A1	**REC61N-11181-00**	JUNTA CULATA	GASKET, CYLINDER HEAD	GUARNIZIONE TESTATA	1
22	61N-11191-01-1S		TAPA CULATA	COVER, CYLINDER HEAD	Coperchio Testata	1
23	61T-11193-A1	**REC61T-11193-A0**	TAPA JUNTA CULATA	GASKET HEAD COVER	GUARN. COPERCHIO TESTATA	1
24	90119-06MA2		TORNILLO	BOLT, WITH WASHER	VITE	2
25	90119-08015		TORNILLO	BOLT, WITH WASHER	VITE	11
26	6E5-12411-01	**REC6E5-12411-02**	TERMOSTATO	THERMOSTAT	TERMOSTATO	1
27	90201-21567		ARANDELA	WASHER PLATE	RONDELLA	1
28	655-12413-01-1S		TAPA	COVER THERMOSTAT	COPERCHIO	1
29	655-12414-A1	**REC655-12414-A1**	JUNTA	GASKET COVER	GUARNIZIONE	1
30	90119-06MA2		TORNILLO	BOLT WITH WASHER	VITE	3
31	6K8-41121-00-1S		PLACA	INNER COVER, EXHAUST	PIASTRA SCARICO	1
32	6K8-41122-A1	**REC6K8-41122-A1**	JUNTA	GASKET, EXHAUST INNER COVER	GUARNIZIONE	1
33	61N-41123-00-1S		TAPA	OUTER COVER, EXHAUST	COPERCHIO	1
34	676-11372-00	**PAF15-04000005**	RACORD	NIPPLE, HOSE	RACCORDO	1
35	90445-10M41		TUBO	HOSE (L105)	TUBO	1
36	6K8-41124-A1	**REC6K8-41124-A1**	JUNTA	GASKET, EXHAUST OUTER COVER	GUARNIZIONE	1
37	90119-06MA3		TORNILLO	BOLT, WITH WASHER	VITE	1
38	90119-06MA4		TORNILLO	BOLT WITH WASHER	VITE	11
39	90119-06MA0		TORNILLO	BOLT WITH WASHER	VITE	3
40	90201-50306		ARANDELA	WASHER, PLATE	RONDELLA	1
41	689-45113-A1	**REC689-45113-A1**	JUNTA	GASKET UPPER CASING	GUARNIZIONE	1
42	94702-00271	**NGKBR7HS-10**	BUJÍA	PLUG SPARK (NGK BR7HS-10) (25MH ENGINES)	CANDELA	2
	94702-00217	**NGKB7HS-10**	BUJÍA	PLUG SPARK (NGK B7HS-10)	CANDELA	2
43	69P-11400-00		CIGÜEÑAL	CRANKSHAFT ASSY	ALBERO MOTORE	1
44	69P-11412-00	**REC6G0-11412-00**	PARTE 1 CIGÜEÑAL	CRANK 1	PARTE 1 ALBERO MOTORE	1
45	61N-11422-00	**REC6G0-11422-00**	PARTE 2 CIGÜEÑAL	CRANK 2	PARTE 2 ALBERO MOTORE	1
46	61N-11432-00	**REC6G0-11432-00**	PARTE 3 CIGÜEÑAL	CRANK 3	PARTE 3 ALBERO MOTORE	1
47	61N-11442-00	**REC6G0-11442-00**	PARTE 4 CIGÜEÑAL	CRANK 4	PARTE 4 ALBERO MOTORE	1
48	93399-99951	**REC93399-99951**	RODAMIENTO	BEARING	CUSCINETTO	1
49	93102-32M07	**REC93102-32M07**	RETÉN	OIL SEAL	PARAOLIO	1
50	93210-46M16	**REC93210-46M16**	ARO TÓRICO	O-RING	O-RING	1
51	93306-305U3	**REC93306-305U3**	RODAMIENTO	BEARING	CUSCINETTO	1
52	61N-11515-00	**REC61N-11515-00**	ARO	SEAL, LABYRINTH	O-RING	1
53	93440-62057		CERCLIP	CIRCLIP	CLIP CHIUSURA	1
54	689-11651-00	**REC689-11651-00**	BIELA	ROD CONNECTING	BIELLA	2
55	689-11681-01	**REC689-11681-00**	BULÓN	PIN, CRANK 1	BULLONE	2
56	93310-62406	**REC93310-624U5**	RODAMIENTO	BEARING	CUSCINETTO	2
57	90209-24M03	**REC90209-24M03**	ARANDELA	WASHER	RONDELLA	4
58	90387-32002	**REC90387-32002**	COLLAR	COLLAR	COLLARE	1
59	93390-00009		RODAMIENTO	BEARING	CUSCINETTO	1
60	61N-11631-00-95	**REC61N-11631-00K**	PISTÓN	PISTON (STD)	PISTONE	2
	61N-11635-00	**REC61N-11635-00K**	PISTÓN	PISTON (25mm O/S)	PISTONE	2
	61N-11636-00	**REC61N-11636-00K**	PISTÓN	PISTON (50mm O/S)	PISTONE	2
61	61N-11603-00	**REC61N-11603-00**	SEGMENTOS	PISTON RING TEST (STD)	SET FASCE	2
	61N-11604-00	**REC61N-11604-00**	SEGMENTO	PISTON RING SET (25mm O/S)	SET FASCE	2
	61N-11605-00	**REC61N-11605-00**	SEGMENTO	PISTON RING SET (50mm O/S)	SET FASCE	2
62	689-11633-00	**REC689-11633-00**	BULÓN	PIN, PISTON	SPINOTTO	2
63	93602-20M02	**REC93602-20M02**	AGUJA RODAMIENTO	PIN, DOWEL	GABBIA A RULLI	68
64	688-11634-00	**REC688-11634-00**	CIERRE	CLIP, PISTON PIN	CLIP CHIUSURA PISTONE	4
65	90201-20M27	**REC90201-20M27**	ARANDELA CIERRE	WASHER, PLATE	RONDELLA CLIP CHIUSURA	4
66	90280-05049	**REC90280-05015**	CHAVETA	KEY WOODRUFF	CHIAVETTA	1

25HP J/JEO/ESH - 30HP D/DEO/DETO - ELH /ELA DMHO/DMSH - ERZ/DEL - MLH (1986-2013)

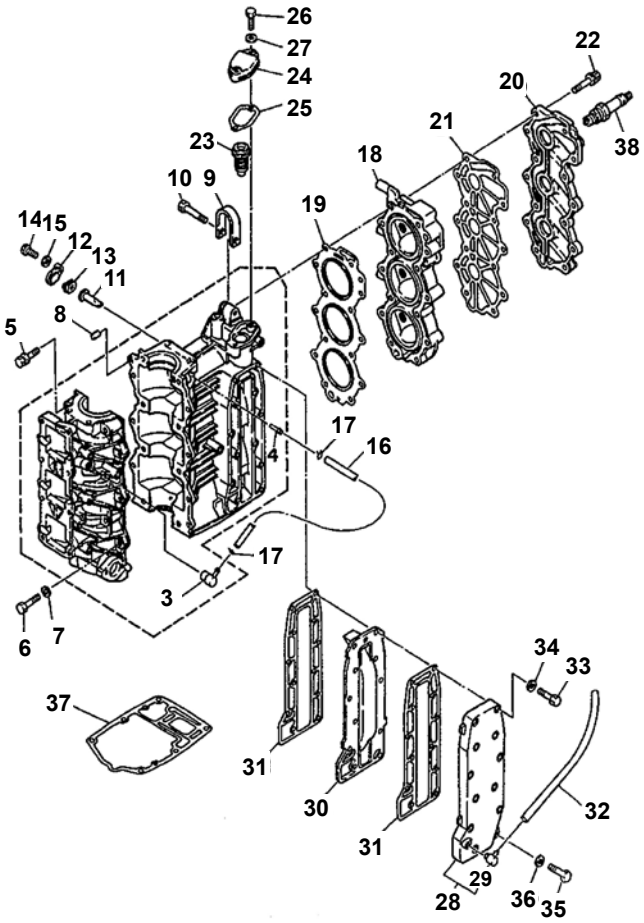

Nº	R.O. OEM	Ref.	Descripción	Description	Descrizione	Cantidad Quanty Quantità
3	650-11370-00	**REC650-11370-00**	VÁLVULA DE CONTROL COMPL.	CHECK VALVE ASSY	VALVOLA DI CONTROLLO COMPL.	1
4	624-14485-00		TUBO DE UNIÓN	CONNECTING HOSE	RACCORDO TUBO	1
5	90119-08M19		TORNILLO CON ARANDELA	BOLT WITH WASHER	VITE CON RONDELLA	8
6	97095-06030	**REC97095-06030**	PERNO	BOLT	PERNO	6
7	92990-06600		ARANDELA PLANA	FLAT WASHER	RONDELLA PIANA	6
8	93606-12019	**REC93606-12019**	PASADOR DE CLAVIJA	PEG BOLT	PERNO PASSANTE	2
9	6F5-11119-00		SOPORTE DEL MOTOR	ENGINE BRACKET	SUPPORTO MOTORE	1
10	97013-08035		PERNO	BOLT	PERNO	1
11	6J8-11325-00	**TEN01150**	ÁNODO	ANODE	ANODO	2
12	6H3-11327-00-94		CUBIERTA DE ÁNODO	ANODE COVER	COPERCHIO ANODO	2
13	6H3-11328-00		TAPÓN	PLUG	TAPPO	2
14	97095-06016		PERNO	BOLT	PERNO	2
15	92990-06600		ARANDELA PLANA	FLAT WASHER	RONDELLA PIANA	2
16	90445-07M29		TUBO (L135)	HOSE (L135)	TUBO (L135)	1
17	90467-06016	**PAHT-2.5X60**	PRESILLA	FASTENER	CLIP	2
18	6J8-11111-00-94		CULATA CILINDRO 1	CYLINDER HEAD 1	TESTATA CILINDRO 1	1
19	6J8-11181-A1	**REC6J8-11181-A2**	JUNTA DE CULATA 1	CYLINDER HEAD GASKET	GUARNIZIONE TESTATA 1	1
20	6J8-11191-00-9M		TAPA CULATA DE CILINDRO 1	CYLINDER HEAD COVER 1	COPERCHIO TESTATA CILINDRO 1	1
21	6J8-11193-A1		JUNTA	GASKET	GUARNIZIONE	1
22	90119-08M21	**REC90119-08M21**	TORNILLO CON ARANDELA	BOLT WITH WASHER	VITE CON RONDELLA	14
23	6E5-12411-01	**REC6E5-12411-01**	TERMOSTATO	THERMOSTAT	TERMOSTATO	1
24	6H4-12413-00-9M		CUBIERTA TERMOSTATO	THERMOSTAT COVER	COPERCHIO TERMOSTATO	1
25	61A-12414-A0	**REC61A-12414-A0**	JUNTA	GASKET	GUARNIZIONE	1
26	97095-06025		PERNO	BOLT	PERNO	2
27	92990-06600		ARANDELA PLANA	FLAT WASHER	RONDELLA PIANA	2
28	6J8-41113-00-9M		CUBIERTA EXT. ESCAPE	OUTTER EXHAUST COVER	COPERCHIO EST. DI SCARICO	1
29	676-11372-00	**PAF15-04000005**	NIPPLE DE MANGUERA	HOSE NIPPLE	RACCORDO TUBO	1
30	6J8-41111-00-9M		CUBIERTA INTERIOR DE ESCAPE	INNER EXHAUST COVER	COPERCHIO INTERNO DI SCARICO	1
31	6J8-41114-A0		JUNTA	GASKET	GUARNIZIONE	2
32	6J8-1111J-00		TUBO 1	HOSE 1	TUBO 1	1
33	97014-06035		TORNILLO HEXAGONAL	HEXAGON BOLT	VITE ESAGONALE	11
34	92990-06600		ARANDELA PLANA	FLAT WASHER	RONDELLA PIANA	11
35	97095-06025		PERNO	BOLT	PERNO	1
36	92990-06600		ARANDELA PLANA	FLAT WASHER	RONDELLA PIANA	1
37	6J8-45113-A0	**REC6J8-45113-00**	JUNTA	GASKET	GUARNIZIONE	1
38	94702-00271	**NGKBR7HS-10**	BUJÍA (NGK BR7HS-10)	SPARKPLUG (NGK BR7HS-10)	CANDELA (NGK BR7HS-10)	3

25HP J/JEO/ESH - 30HP D/DEO/DETO - ELH /ELA DMHO/DMSH - ERZ/DEL - MLH (1986-2013)

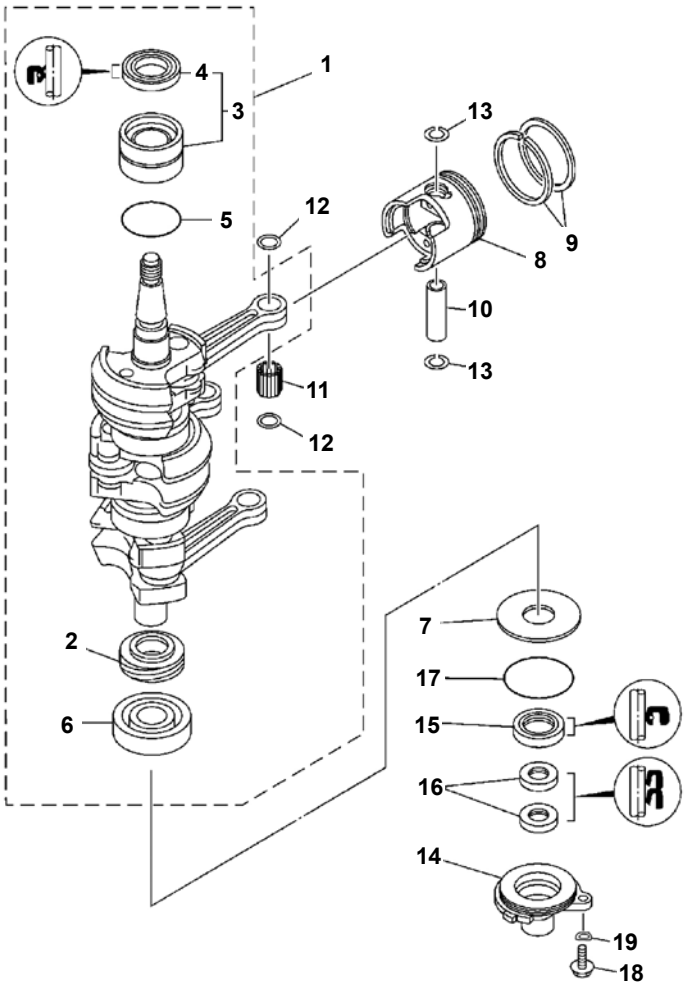

Nº	R.O. OEM	Ref.	Descripción	Description	Descrizione	Cantidad Quanty Quantità
1	6J8-11400-11		CIGÜEÑAL COMPLETO	CRANKSHAFT ASSY	ALBERO MOTORE	1
2	6J8-11536-00		ENGRANAJE TRACCIÓN	GEAR DRIVE	INGRANAGGIO	1
3	93311-632U7	**REC93311-632U7**	COJINETE RODILLOS	BEARING, CYL	CUSCINETTO CILINDRO	1
4	93102-26M27	**REC93102-26M27**	SELLO ACEITE	OIL SEAL	PARAOLIO	1
5	93210-42159	**REC93210-42159**	ANILLO O	O RING	O-RING	1
6	93306-305U3	**REC93306-305U3**	COJINETE	BEARING	CUSCINETTO	1
7	90201-50306		ARANDELA PLANA	FLAT WASHER	RONDELLA PIANA	1
8	6J8-11631-02-97	**REC6J8-11631-02K**	PISTÓN (NORMA)	PISTON	PISTONE (STD)	3
	6J8-11635-02		PISTÓN (0.25mm O/S)	PISTON	PISTONE (0.25mm O/S)	3
	6J8-11636-02		PISTÓN (0.50mm O/S)	PISTON	PISTONE (0.50mm O/S)	3
9	6J8-11601-01		JUEGO DE AROS (NORMA)	RING SET	SET FASCE (STD)	3
	6J8-11601-11		JUEGO DE AROS (0.25mm O/S)	RING SET	SET FASCE (0.25mm O/S)	3
	6J8-11601-21		JUEGO DE AROS (0.50mm O/S)	RING SET	SET FASCE (0.50mm O/S)	3
10	6J8-11633-00		PASADOR PISTÓN	PIN PISTON	SPINOTTO PISTONE	3
11	93602-16M10		PASADOR CLAVIJA	PIN PEG	SPINOTTO	84
12	90201-16379		ARANDELA PLANA	FLAT WASHER	RONDELLA PIANA	6
13	93450-17129		CIERRE	CIRCLIP	CLIP CHIUSURA	6
14	6J8-15396-00-8B		CAJA DE SELLO DE ACEITE	SEAL OIL BOX	PARAOLIO	1
15	93101-25M28		SELLO ACEITE	OIL SEAL	PARAOLIO	1
16	93104-16M04	**REC93104-16M01**	SELLO ACEITE	OIL SEAL	PARAOLIO	2
17	93210-56M80	**REC6E5-12411-01**	ANILLO O	O RING	O-RING	1
18	97095-06016		PERNO	BOLT	PERNO	2
19	92990-06600	**REC61A-12414-A0**	ARANDELA PLANA	FLAT WASHER	RONDELLA PIANA	2

E40X - 40XMH - E40XMH/XW/XWT

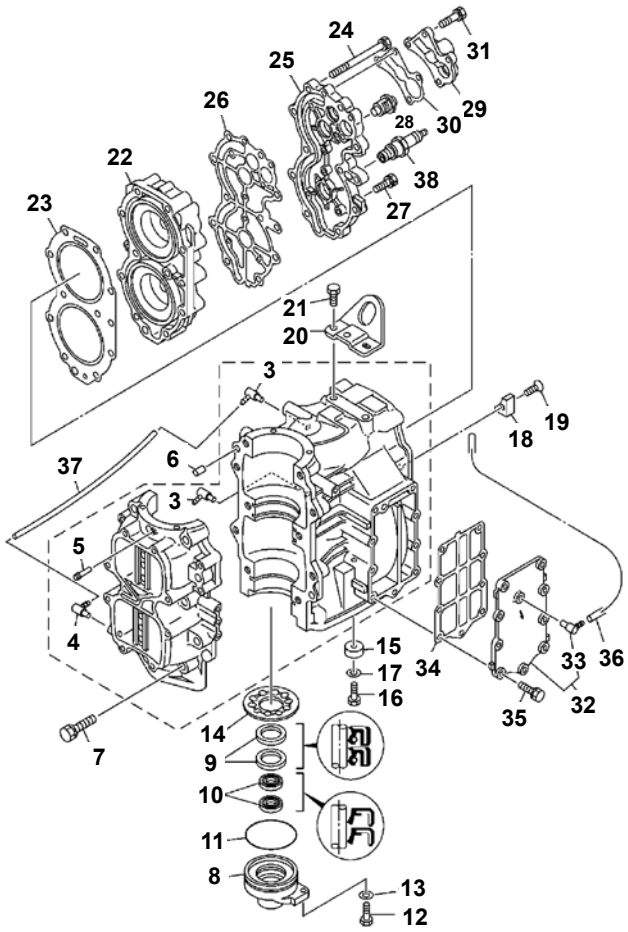

Nº	R.O. OEM	Ref.	Descripción	Description	Descrizione	Cantidad Quanty Quantità
3	6E5-03552-00		RACORD	NOZZEL	RACCORDO	2
4	6E5-13552-00		RACORD	NOZZEL	RACCORDO	1
5	624-14485-00		CENTRADOR	PIPE, JOINT	GIUNTO PER TUBO	1
6	93608-12063		PIN	DOWEL	SPINOTTO	2
7	90119-10005		TORNILLO	BOLT, WITH WASER	VITE	10
8	66T-15396-01-94		CUERPO RETÉN	HOUSIN, OIL SEAL	CORPO GUARNIZIONE	1
9	93102-30M56	**REC93102-30M56**	RETÉN	OIL SEAL	PARAOLIO	2
10	93101-16001	**REC93101-16001**	RETÉN	OIL SEAL	PARAOLIO	2
11	93210-65M50	**REC93210-65M50**	ARO TÓRICO	O-RING	O-RING	1
12	97095-06020		TORNILLO	BOLT	VITE	1
13	92995-06600	**PAGB/T97.1-85**	ARANDELA	WASHER	RONDELLA	1
14	66T-11565-00		ARANDELA	WASHER, BEARING COVER	RONDELLA	1
15	676-45251-00	**REC676-45251-00**	ÁNODO	ANODE	ANODO	1
16	97095-06020		TORNILLO	BOLT	VITE	1
17	92995-06600	**PAGB/T97.1-85**	ARANDELA	WASHER	RONDELLA	1
18	676-11325-00	**REC676-11325-00**	ÁNODO	ANODE	ANODO	1
19	90141-06M00		TORNILLO	SCREW, COUNTERSUNK	VITE	1
20	66T-11119-00		GANCHO	HANGER, ENGINE	GANCIO	1
21	90101-08002		TORNILLO	BOLT	VITE	2
22	66T-11111-01-1S		CULATA	HEAD CYLINDER	TESTATA	1
23	66T-11181-A2	**REC667-11181-00**	JUNTA CULATA	HEAD CYLINDER GASKET	GUARNIZIONE TESTATA	1
24	90119-08MA5		TORNILLO	BOLT, WITH WASHER	VITE	11
25	66T-11191-00-1S		CULATÍN	COVER, CYLINDER HEAD	COPERCHIO TESTATA	1
26	66T-11193-A2	**REC66T-11193-A0**	JUNTA CULATÍN	HEAD COVER GASKET	GUARNIZIONE TESTATA	1
27	90119-06MA3		TORNILLO	BOLT, WITH WASHER	VITE	4
28	6E5-12411-01	**REC6E5-12411-02**	TERMOSTATO	THERMOSTAT	TERMOSTATO	1
29	676-12413-00-1S		TAPA TERMOSTATO	THERMOSTAT COVER	COPERCHIO TERMOSTATO	1
30	676-12414-A0	**REC676-12414-A0**	JUNTA TAPA	GASKET, COVER	GUARNIZIONE COPERCHIO	1
31	90119-06MA5		TORNILLO	BOLT, WITH WASHER	VITE	4
32	66T-41113-00-1S		TAPA	OUTER COVER, EXHAUST	COPERCHIO	1
33	676-11372-00		RACORD	NIPPLE HOSE	RACCORDO	1
34	66T-41114-A0	**REC66T-41114-A0**	JUNTA TAPA REFRIG.	GASKET, EXHAUST OUTER COVER	GUARN. COPERCHIO REFRIG.	1
35	90119-06MA3		TORNILLO	BOLT, WITH WASHER	VITE	9
36	90445-09M75		TUBO	HOSE (L370)	TUBO	1
37	90445-07M08		TUBO	HOSE (L220)	TUBO	1
38	NGK-BR7HS-PK10	**NGKBR7HS**	BUJÍA NGKBR7HS	PLUG, SPARK NGKBR7HS	CANDELA NGKBR7HS	2

E40X - 40XMH - E40XMH/XW/XWT

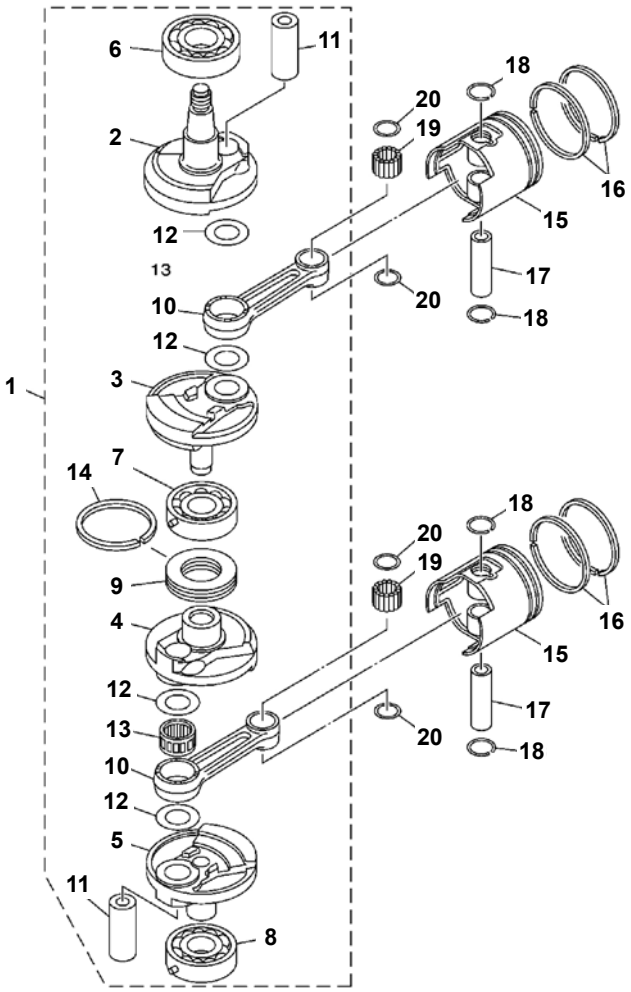

Nº	R.O. OEM	Ref.	Descripción	Description	Descrizione	Cantidad Quanty Quantità
1	66T-11400-01		CIGÜEÑAL	CRANKSHAFT ASSY	ALBERO MOTORE	1
2	66T-11412-00	**REC66T-11412-00**	PARTE 1 CIGÜEÑAL	CRANK 1	PARTE 1 ALBERO MOTORE	1
3	66T-11422-00	**REC66T-11422-00**	PARTE 2 CIGÜEÑAL	CRANK 2	PARTE 2 ALBERO MOTORE	1
4	66T-11432-00	**REC66T-11432-00**	PARTE 3 CIGÜEÑAL	CRANK 3	PARTE 3 ALBERO MOTORE	1
5	66T-11442-00	**REC66T-11442-00**	PARTE 4 CIGÜEÑAL	CRANK 4	PARTE 4 ALBERO MOTORE	1
6	93306-307U0	**REC93306-307U0**	RODAMIENTO	BEARING	CUSCINETTO	1
7	93332-000UE	**REC93332-000UE**	RODAMIENTO	BEARING	CUSCINETTO	1
8	93306-306V5	**REC93306-306V5**	RODAMIENTO	BEARING	CUSCINETTO	1
9	6F5-11515-00	**REC6F5-11515-00**	ARILLO	SEAL, LABERYNTH 1	GUARNIZIONE TONDA	1
10	6F5-11651-00	**REC6F5-11651-00**	BIELA	ROD, CONNECTING	BIELLA	2
11	66T-11681-00	**REC66T-11681-00**	BULÓN	PIN CRANK 1	SPINOTTO	2
12	90209-27M07	**REC90209-27M07**	ARANDELA	WASHER	RONDELLA	4
13	93310-727U0	**REC93310-727U0**	RODAMIENTO	BEARING	CUSCINETTO	2
14	93440-68M03	**REC93440-68M03**	CIERRE	CIRCLIP	CLIP CHIUSURA	1
15	66T-11631-01-93	**REC66T-11631-01K**	PISTÓN	PISTON (STD)	PISTONE	2
	66T-11635-01	**REC66T-11635-01K**	PISTÓN	PISTON (0.25mm O/S)	PISTONE	2
	66T-11636-01	**REC66T-11636-01K**	PISTÓN	PISTON (0.50mm O/S)	PISTONE	2
16	66T-11603-00	**REC66T-11603-00**	SEGMENTOS	PISTON RING SET (STD)	SET FASCE	2
	66T-11604-00	**REC66T-11604-00**	SEGMENTOS	PISTON RING SET (0.25mm O/S)	SET FASCE	2
	66T-11605-00	**REC66T-11605-00**	SEGMENTOS	PISTON RING SET (0.50mm O/S)	SET FASCE	2
17	6F5-11633-00	**REC6F5-11633-00**	BULÓN	PIN, PISTON	SPINOTTO	2
18	663-11634-00	**REC663-11634-00**	JUNTA	CLIP, PISTON PIN	GUARNIZIONE	4
19	93603-21111	**REC93603-21111**	AGUJAS RODAMIENTO	PIN, DOWEL	SPINOTTO CENTRAGGIO	56
20	90201-20417	**REC90201-20417**	ARANDELA	WASHER, PLATE	RONDELLA	4

E40GMH/S/L - E40JMH - E40JWH - 40GWH - 40JWH (2003/04)

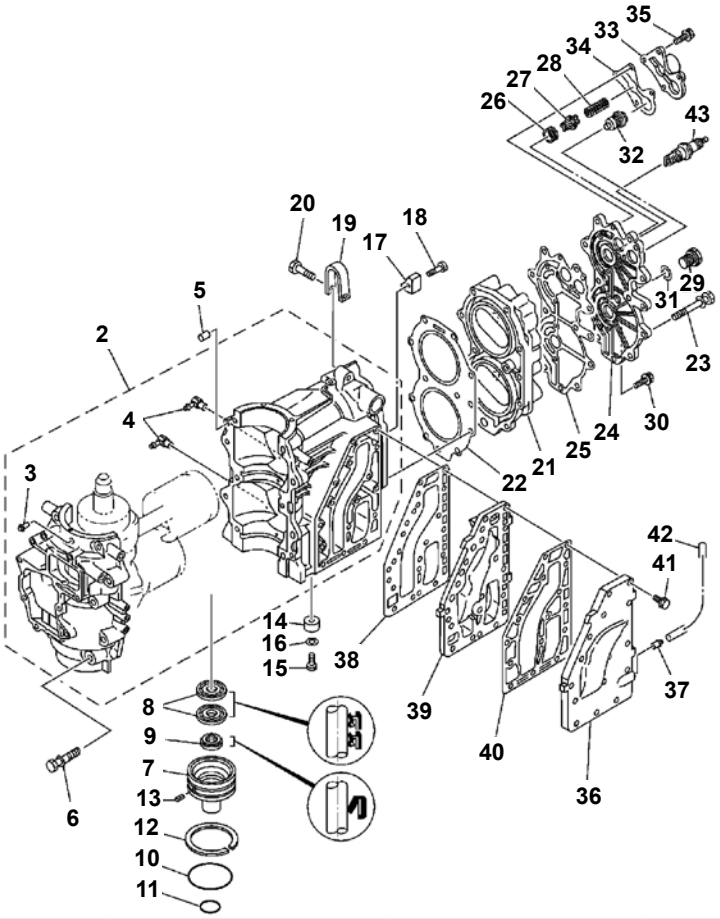

Nº	R.O. OEM	Ref.	Descripción	Description	Descrizione	Cantidad Quanty Quantità
3	624-14485-00		TUBO DE UNIÓN	PIPE, JOINT	GIUNTO PER TUBO	1
4	650-11370-01	**REC650-11370-00**	VÁLVULA CONTROL COMPL.	CONTROL VALVE	VALVOLA DI CONTROLLO COMPL.	2
5	93608-12063		PASADOR DE CLAVIJA	PIN DOWEL	PERNO PASSANTE	2
6	90119-10005		TORNILLO CON ARANDELA	BOLT WITH WASHER	VITE CON RONDELLA	10
7	6F5-15396-01-5B		CAJA DE SELLO DE ACEITE	HOUSING OIL SEAL	PARAOLIO	1
8	93101-30M33	**REC93101-30M33**	RETÉN	OIL SEAL	PARAOLIO	2
9	93104-16M01	**REC93104-16M01**	RETÉN	OIL SEAL	PARAOLIO	1
10	93210-65M50	**REC93210-65M50**	ANILLO O	O RING	O-RING	1
11	93210-22M02	**REC93210-22M02**	ANILLO O	O RING	O-RING	1
12	93440-68M03	**REC93440-68M03**	CIERRE	CIRCLIP	CLIP CHIUSURA	1
13	91690-30010		PASADOR DE RESORTE	PIN, SPRING	SPINOTTO DI RITORNO	1
14	676-45251-00	**TEN01127**	ÁNODO	ANODE	ANODO	1
15	97095-06016		PERNO	BOLT	PERNO	1
16	92995-06600		ARANDELA	WASHER	RONDELLA	1
17	676-11325-00	**TEN01166**	ÁNODO	ANODE	ANODO	1
18	90141-06M00		TORNILLO RANURADO	SLOTTED BOLT	VITE SCANALATA	1
19	6F5-11119-00		SOPORTE DEL MOTOR	ENGINE BRACKET	SUPPORTO MOTORE	1
20	90101-08001		TORNILLO	BOLT	VITE	1
21	6F6-11111-00-1S		CULTA CILINDRO 1	CYLINDER HEAD 1	TESTA CILINDRO 1	1
22	6F5-11181-A1	**REC6F5-11181-A2**	JUNTA DE CULATA 1	HEAD CYLINDER GASKET 1	GUARNIZIONE TESTATA 1	1
23	90119-08MA5		TORNILLO CON ARANDELA	BOLT WITH WASHER	VITE CON RONDELLA	11
24	6F6-11191-00-1S		TAPA CULATA DE CILINDRO 1	HEAD CYLINDER COVER	COPERCHIO TESTATA CILINDRO1	1
25	6F6-11193-A1	**REC6F6-11193-A1**	JUNTA	GASKET	GUARNIZIONE	1
26	90480-18065		TAPÓN	PLUG	TAPPO	1
27	663-12416-00		VÁLVULA CONTROL DE PRESIÓN	VALVE, PRESS CONTROL	VALVOLA DI CONTROLLO PRESSIONE	1
28	90501-14M02		RESORTE DE COMPRESIÓN	SPRING COMPRESSION	MOLLA DI COMPRESSIONE	1
29	90340-14036		TORNILLO DE DRENAJE	PLUG STRAIGHT SCREW	VITE DRENAGGIO	1
30	90119-06MA3		TORNILLO CON ARANDELA	BOLT WITH WASHER	VITE CON RONDELLA	4
31	90430-14115	**PAF15-04000003**	JUNTA	GASKET	GUARNIZIONE	1
32	6F5-12411-02	**REC6F5-12411-03**	TERMOSTATO	THERMOSTAT	TERMOSTATO	1
33	6E9-12413-00-1S		CUBIERTA TERMOSTATO	THERMOSTAT COVER	COPERCHIO TERMOSTATO	1
34	6E9-12414-A1	**REC6E9-12414-A1**	JUNTA	GASKET	GUARNIZIONE	1
35	90119-06MA4		TORNILLO CON ARANDELA	BOLT WITH WASHER	VITE CON RONDELLA	4
36	6F5-41113-01-1S		CUBIERTA EXT. DE ESCAPE	OUTTER EXHAUST COVER	COPERCHIO ESTERNO SCARICO	1
37	650-24378-00		TUBO DE UNIÓN 4	PIPE JOINT 4	GIUNTO PER TUBO 4	1
38	6F5-41112-A0	**REC6F5-41112-A0**	JUNTA	GASKET	GUARNIZIONE	1
39	6F5-411112-01-1S		CUBIERTA INT. DE ESCAPE	INNER EXHAUST COVER	COPERCHIO INT. SCARICO	1
40	6F5-41114-A0	**REC6F5-41114-A0**	JUNTA	GASKET	GUARNIZIONE	1
41	90119-06MA3		TORNILLO CON ARANDELA	BOLT WITH WASHER	VITE CON RONDELLA	16
42	90445-09M37		TUBO (L240)	HOSE (L240)	TUBO (L240)	1
43	94702-00040	**NGKB7HS**	BUJÍA	SPARKPLUG	CANDELA	2

E40GMH/S/L - E40JMH - E40JWH - 40GWH - 40JWH (2003/04)

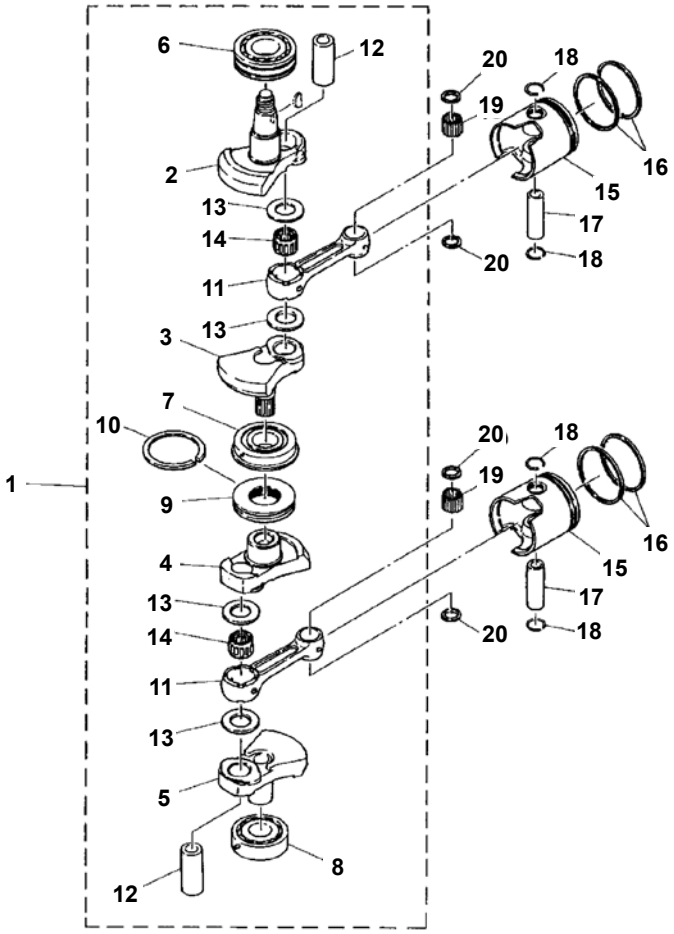

Nº	R.O. OEM	Ref.	Descripción	Description	Descrizione	Cantidad Quanty Quantità
1	6F6-11400-01		CIGÜEÑAL COMPLETO	CRANKSHAFT COMPLETE	ALBERO MOTORE COMPLETO	1
2	6F5-11412-11	**REC6F5-11412-11**	PARTE 1 CIGÜEÑAL	CRANK 1	PARTE 1 ALBERO MOTORE	1
3	6F5-11422-11	**REC6F5-11422-11**	PARTE 2 CIGÜEÑAL	CRANK 2	PARTE 2 ALBERO MOTORE	1
4	6F5-11432-11	**REC6F5-11432-11**	PARTE 3 CIGÜEÑAL	CRANK 3	PARTE 3 ALBERO MOTORE	1
5	6F5-11442-11	**REC6F5-11442-11**	PARTE 4 CIGÜEÑAL	CRANK 4	PARTE 4 ALBERO MOTORE	1
6	93306-307U0	**REC93306-307U0**	COJINETE	BEARING	CUSCINETTO	1
7	93332-000UE	**REC93332-000UE**	COJINETE	BEARING	CUSCINETTO	1
8	93306-306U1	**REC93306-306U2**	COJINETE	BEARING	CUSCINETTO	1
9	6F5-11515-00	**REC6F5-11515-00**	SELLO LABERINTO 1	LABERINTH SEAL 1	GUARNIZIONE SIGILLATA 1	1
10	93440-68M03	**REC93440-68M03**	CIERRE	CERCLIP	CLIP CHIUSURA	1
11	6F5-11651-00	**REC6F5-11651-00**	BIELA	CRANK	BIELLA	2
12	6F5-11681-00	**REC6F5-11681-00**	PASADOR MANIVELA 1	PISTON PIN	SPINOTTO LEVA 1	2
13	90209-27M07	**REC90209-27M07**	ARANDELA DE SEPARACIÓN	WASHER	RONDELLA DISTANZIALE	14
14	93310-727V7	**REC93310-727V7**	COJINETE DE RODILLOS	BEARING	GABBIA A RULLI	2
15	6F6-11631-00-95	**REC6F6-11631-00K**	PISTÓN (NORMA)	PISTON	PISTONE (STD)	2
	6F6-11635-00		PISTÓN (0.25mm O/S)	PISTON	PISTONE (0.25mm O/S)	2
	6F6-11636-00	**REC6F6-11636-00K**	PISTÓN (0.50mm O/S)	PISTON	PISTONE (0.50mm O/S)	2
16	6F5-11610-00	**REC6F5-11610-00**	JUEGO DE AROS (NORMA)	RING SET	SET FASCE (STD)	2
	6F5-11610-10	**REC6F5-11610-10**	JUEGO DE AROS (0.25mm O/S)	RING SET	SET FASCE (0.25mm O/S)	2
	6F5-11610-20	**REC6F5-11610-20**	JUEGO DE AROS (0.50mm O/S)	RING SET	SET FASCE (0.50mm O/S)	2
17	6F5-11633-00	**REC6F5-11633-00**	PASADOR, PISTÓN	PISTON PIN	SPINOTTO, PISTONE	2
18	663-11634-00	**REC663-11634-00**	PRESILLA, BULÓN DE PISTÓN	CLIP PISTON PIN	CLIP SPINOTTO PISTONE	4
19	93603-21111	**REC93603-21111**	PASADOR DE CLAVIJA	PIN ROLLER BEARING	PERNO PASSANTE	56
20	90201-20417	**REC90201-20417**	ARANDELA PLANA	FLAT WASHER	RONDELLA PIANA	4

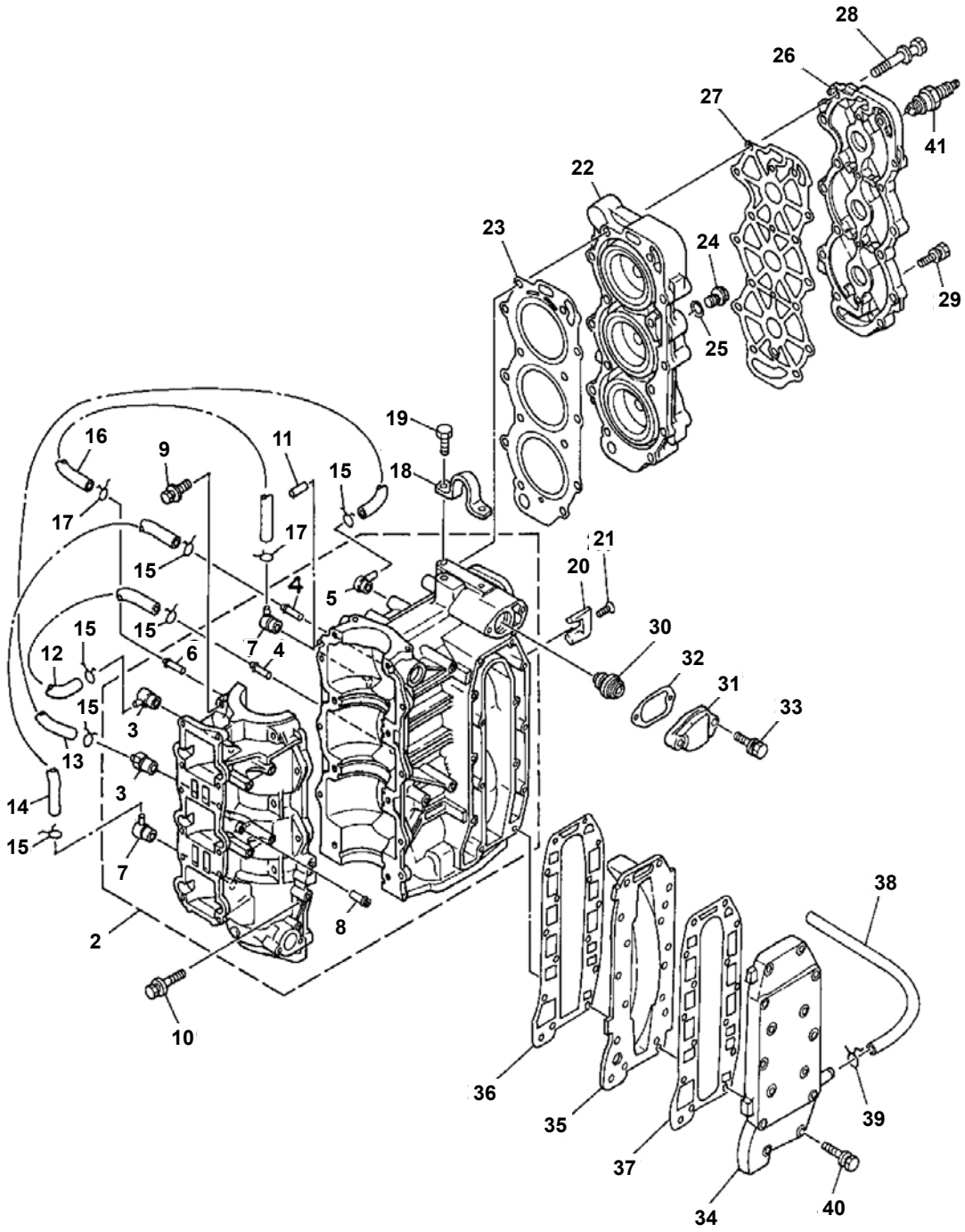

Ref.	R.O.
REC63D-W0001-00	

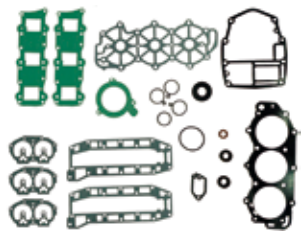

Kit juntas de motor
Power head gasket kit
Kit guarnizione motore

Nº	R.O. OEM	Ref.	Descripción	Description	Descrizione	Cantidad Quanty Quantità
3	650-11370-01	**REC650-11370-00**	VÁLVULA	CHECK VALVE ASSY	VALVOLA	2
4	624-14485-00		PIPA	PIPE, JOINT	GIUNTO PER TUBO	2
5	6H4-11372-01		RACORD	NIPPLE HOSE	RACCORDO	1
6	624-14485-00		PIPA	PIPE JOINT	GIUNTO PER TUBO	1
7	688-11370-01	**REC688-11370-00**	VÁLVULA	CHECK VALVE ASSY	VALVOLA	2
8	650-24378-00		PIPA	PIPE JOINT	GIUNTO PER TUBO	1
9	90119-08019		TORNILLO	BOLT WITH WASHER	VITE	8
10	90119-06M13		TORNILLO	BOLT WITH WASHER	VITE	6
11	93606-12019	**PAF15-00000006**	PIN DOWEL	LABERINTH SEAL 1	SPINOTTO CENTRAGGIO	2
12	90445-07M46		TUBO	HOSE (L360)	TUBO	1
13	90445-07M27		TUBO	HOSE (L310)	TUBO	1
14	90445-07M24		TUBO	HOSE (L240)	TUBO	1
15	90467-06016		CLIP	CLIP	CLIP	6
16	90445-07MA3		TUBO	HOSE (L200)	TUBO	1
17	90467-06016		CLIP	CLIP	CLIP	2
18	6H4-11119-01		PUENTE	HANGER, ENGINE	GANCIO	1
19	90101-06021		TORNILLO	BOLT	VITE	2
20	688-11325-00	**REC688-11325-00**	ÁNODO	ANODE	ANODO	2
21	98780-04016		TORNILLO	SCREW, FLAT HEAD	VITE	2
22	63D-11111-00-1S		CULATA	HEAD CYLINDER	TESTATA	1
23	63D-11181-A2	**REC63D-11181-A1**	JUNTA CULATA	GASKET, CYLINDER HEAD	GUARNIZIONE TESTATA	1
24	90340-14M00		TAPÓN	PLUG, STRAIGHT SCREW	TAPPO	1
25	90430-14115	**REC90430-14115**	JUNTA	GASKET	GUARNIZIONE	1
26	63D-11191-00-1S		TAPA CULATÍN	COVER, CYLINDER HEAD	COPERCHIO TESTATA	1
27	63D-11193-A0	**REC63D-11193-A0**	JUNTA	GASKET, HEAD COVER	GUARNIZIONE	1
28	90119-08015		TORNILLO	BOLT WITH WASHER	VITE	14
29	90119-06MA3		TORNILLO	BOLT, WITH WASHER	VITE	4
30	6E5-12411-30	**REC6E5-12411-30**	TERMOSTATO	THERMOSTAT	TERMOSTATO	1
31	6H4-12413-00-1S		TAPA TERMOSTATO	COVER, THERMOSTAT	COPERCHIO TERMOSTATO	1
32	6J8-12414-A0	**REC61A-12414-A0**	JUNTA TAPA	GASKET, COVER	GUARNIZIONE COPERCHIO	1
33	90119-06MA3		TORNILLO	BOLT, WITH WASHER	VITE	2
34	6H4-41113-00-1S		TAPA	OUTER COVER, EXHAUST	COPERCHIO	1
35	6H4-41111-00-1S		PLACA	INNER COVER, EXHAUST	PIASTRA	1
36	6H4-41112-A0	**REC6H4-41112-A0**	JUNTA	GASKET, EXHAUST INNER COVER	GUARNIZIONE	1
37	6H4-41114-A0	**REC6H4-41114-A0**	JUNTA	GASKET, EXHAUST OUTTER COVER	GUARNIZIONE	1
38	90445-09M37		TUBO	HOSE (L240)	TUBO	1
39	90467-08004		CLIP	CLIP	CLIP	1
40	90119-06MA5		TORNILLO	BOLT, WITH WASHER	VITE	13
41	94702-00247	**NGKBR8HS-10**	BUJÍA	PLUG, SPARK (NGK BR8HS-10)	CANDELA	3
	94702-00271	**NGKBR7HS-10**	BUJÍA	PLUG, SPARK (NGK BR7HS-10) (EO, MHO ENGINES)	CANDELA	3

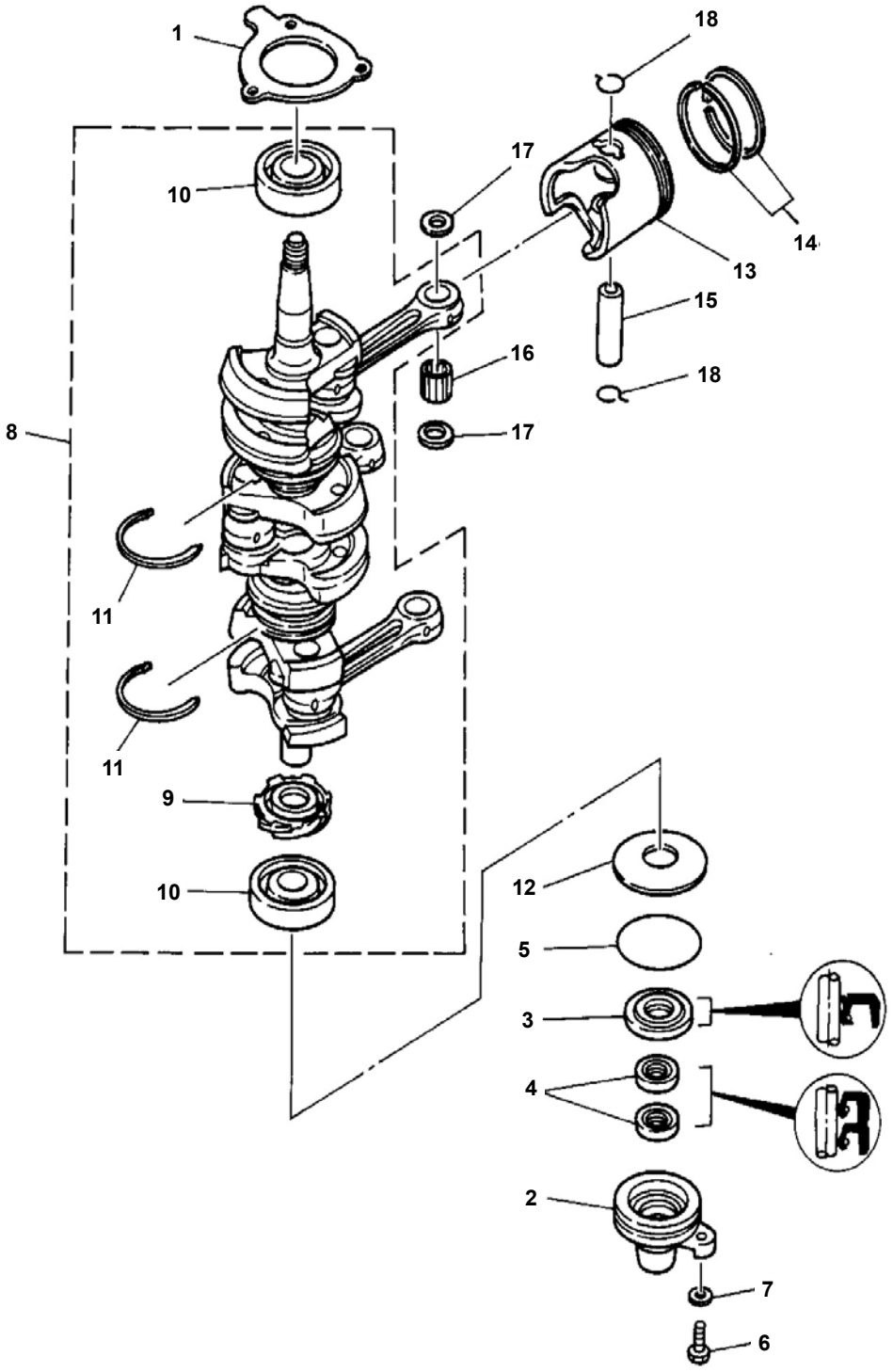
1
10
8
11
11
9
10
17
16
17
18
13
14
15
18
12
5
3
4
2
7
6

Nº	R.O. OEM	Ref.	Descripción	Description	Descrizione	Cantidad Quanty Quantità
1	6H4-15369-A1	**REC6H4-15369-A1**	JUNTA CUERPO	GASKET, OIL SEAL HOUSING	GUARNIZIONE CORPO	1
2	6H4-15396-03-5B		CUERPO	HOUSING, OIL SEAL	CORPO	1
3	93102-25M28	**REC93102-25M28**	RETÉN	OIL SEAL	PARAOLIO	1
4	93104-16M01	**REC93104-16M01**	RETÉN	OIL SEAL	PARAOLIO	2
5	93210-58M21	**REC93210-58M21**	ARO TÓRICO	O-RING	O-RING	1
6	97095-06020		TORNILLO	BOLT	VITE	1
7	92995-06600	**PAGB/T5783-2000**	ARANDELA	WASHER	RONDELLA	1
8	6H4-11400-14		CIGÜEÑAL	CRANKSHAFT ASSY	ALBERO MOTORE	1
9	6H4-11536-00		PIÑON	GEAR, DRIVE	INGRANAGGIO	1
10	93306-305U8	**REC93306-305U8**	RODAMINETO	BEARING	CUSCINETTO	2
11	93440-62057		CIERRE	CIRCLIP	CLIP CHIUSURA	2
12	90201-50306		ARANDELA	WASHER	RONDELLA	1
13	6H4-11631-01-95	**REC6H4-11631-01K**	PISTÓN	PISTON (STD)	PISTONE	3
	6H4-11635-01	**REC6H4-11635-01K**	PISTÓN	PISTON (0.25mm O/S)	PISTONE	3
	6H4-11636-01	**REC6H4-11636-01K**	PISTÓN	PISTON (0.50mm O/S)	PISTONE	3
14	63D-11603-00	**REC63D-11603-00**	SEGMENTOS	PISTON RING SET (STD)	SET FASCE	3
	63D-11604-00	**REC63D-11604-00**	SEGMENTOS	PISTON RING SET (0.25mm O/S)	SET FASCE	3
	63D-11605-00	**REC63D-11605-00**	SEGMENTOS	PISTON RING SET (0.50mm O/S)	SET FASCE	3
15	648-11633-00	**REC648-11633-00**	BULÓN	PIN, PISTON	SPINOTTO	3
16	93602-20M02	**REC93602-20M02**	AGUJA RODAMIENTO	PIN, DOWEL	SPINOTTO DI CENTRAGGIO	93
17	6H4-11641-00		ARANDELA	WASHER, PISTON PIN	RONDELLA	6
18	6H4-11634-01	**REC6H4-11634-01**	CLIP PISTON	CLIP, PISTON PIN	CLIP PISTON	6

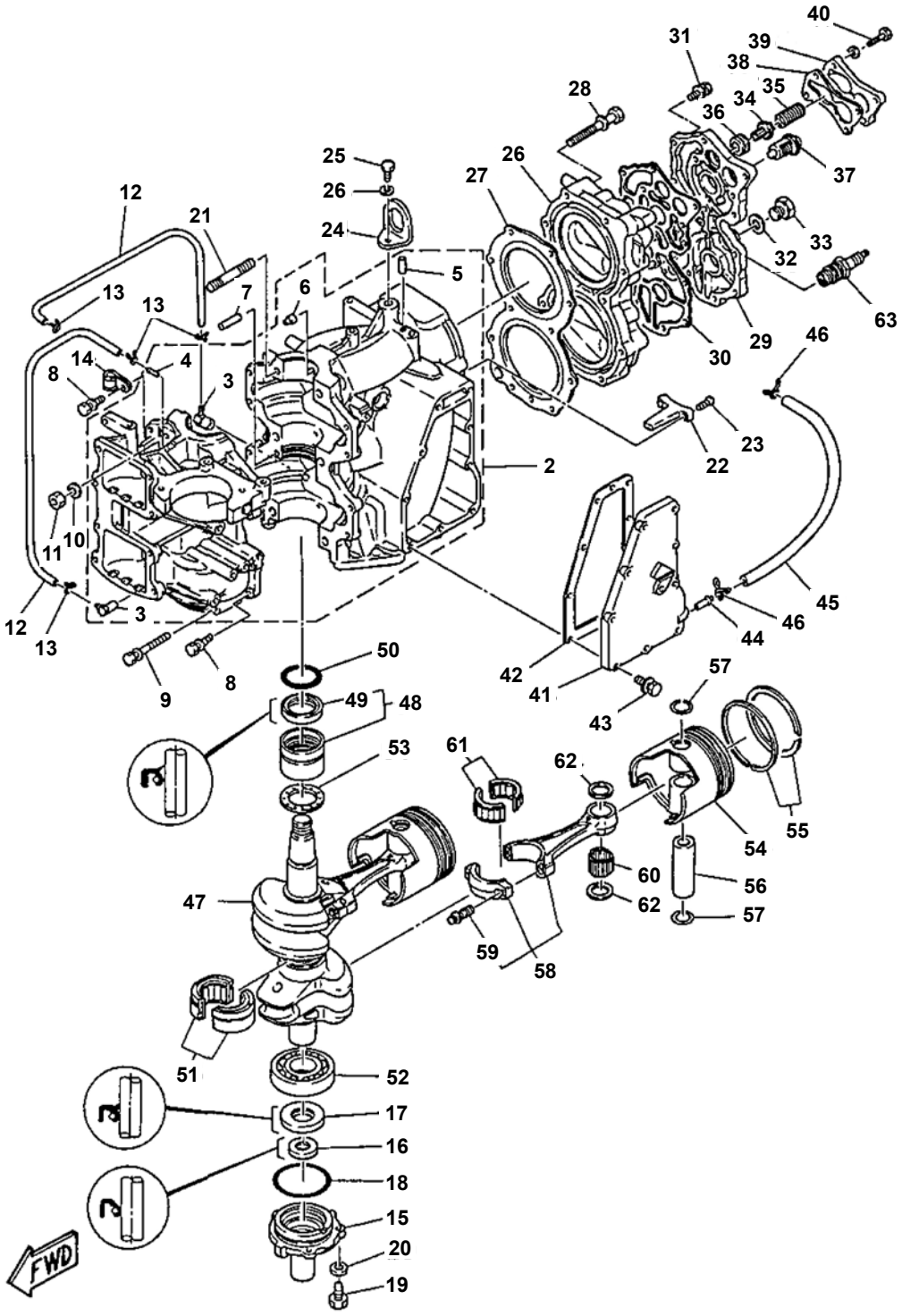

Ref.	R.O.
REC697-W0001-02	697-W0001-02

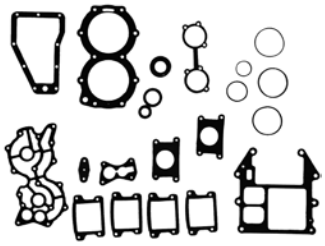

Kit juntas de motor
Power head gasket kit
Kit guarnizione motore

Nº	R.O. OEM	Ref.	Descripción	Description	Descrizione	Cantidad Quanty Quantità
3	650-11370-01	**REC650-11370-00**	VÁLVULA DE CONTROL COMPL.	CHECK VALVE ASSY	VALVOLA DI CONTROLLO COMPL.	2
4	624-14485-00		PIPE JOINT	TUBO DE UNIÓN	GIUNTO PER TUBO	1
5	93604-08062		PASADOR DE CLAVIJA	PIN DOWEL	PERNO PASSANTE	1
6	663-11518-01		SEGURO BALERO	LOCK, BEARING	BLOCCO CUSCINETTO	2
7	93608-12063		PASADOR DE CLAVIJA	PIN DOWEL	PERNO PASSANTE	1
8	90119-06M12		TORNILLO CON ARANDELA	BOLT WITH WASHER	VITE CON RONDELLA	8
9	90119-10005		TORNILLO CON ARANDELA	BOLT WITH WASHER	VITE CON RONDELLA	4
10	90201-10008		ARANDELA PLANA	WASHER PLATE	RONDELLA PIANA	2
11	95313-10600		TUERCA	NUT	DADO	2
12	90445-07240		TUBO (L330)	HOSE (L330)	TUBO (L330)	2
13	90467-06016		PRESILLA	CLIP	CLIP	4
14	90461-04011		GRAPA	CLAMP	MORSETTO	1
15	663-15359-01-94		CAJA DE SELLLO DE ACEITE	HOUSING OIL SEAL	PARAOLIO	1
16	93104-18049	**REC93104-18049**	SELLO ACEITE	OIL SEAL	PARAOLIO	1
17	93102-28135	**REC93102-28135**	RETÉN ACEITE	OIL SEAL	GUARNIZIONE OLIO	1
18	93210-62269	**REC93210-62269**	JUNTA TÓRICA	O-RING	O-RING	1
19	97095-06016		PERNO	BOLT	PERNO	3
20	92995-06600		ARANDELA	WASHER	RONDELLA	3
21	90116-10177		ESPÁRRAGO	BOLT, STUD	BULLONE	2
22	663-11325-00	**CM663-11325-00**	ÁNODO	ANODE	ANODO	1
23	98780-04015		TORNILLO CABEZA PLANA	SCREW, FLAT HEAD	VITE TESTA PIANA	2
24	697-11119-00		SOPORTE DEL MOTOR	HANGER, ENGINE	SUPPORTO MOTORE	1
25	90119-08018		TORNILLO CON ARANDELA	BOLT, WITH WASHER	VITE CON RONDELLA	1
26	663-11111-02-1S		CULATA CILINDRO	HEAD CYLINDER	TESTATA CILINDRO	1
27	697-11181-A2	**REC697-11181-A0**	JUNTA DE CULATA	GASKET, CYLINDER HEAD	GUARNIZIONE TESTATA	1
28	90119-08MA8		TORNILLO CON ARANDELA	BOLT, WITH WASHER	VITE CON RONDELLA	10
29	663-11191-00-1S		TAPA CULATA DE CILINDRO	COVER CYLINDER HEAD	COPERCHIO TESTATA CILINDRO	1
30	663-11193-A0	**REC663-11193-00**	JUNTA	GASKET HEAD COVER	GUARNIZIONE	1
31	90119-06MA2		TORNILLO CON ARANDELA	BOLT, WITH WASHER	VITE CON RONDELLA	12
32	90430-14115	**REC90430-14115**	JUNTA	GASKET	GUARNIZIONE	1
33	90340-14036		TORNILLO DE DRENAJE	PLUG STRAGIHT SCREW	VITE DRENAGGIO	1
34	663-12416-00		VÁLVULA DE CONTROL DE PRESIÓN	VALVE, PRESSURE CONTROL	VALVOLA DI CONTROLLO PRESSIONE	1
35	90501-14234		RESORTE DE COMPRESIÓN	SPRING, COMPRESSION	MOLLA DI COMPRESSIONE	1
36	90480-18065		TAPÓN	GROMMET	TAPPO	1
37	6F5-12411-02	**GLM13010**	TERMOSTATO	THERMOSTAT (55E ENGINES)	TERMOSTATO	1
38	663-12416-00-1S		CUBIERTA DE TERMOSTATO	COVER, THERMOSTAT	COPERCHIO TERMOSTATO	1
39	663-12414-A0	**REC663-12414-00**	JUNTA	GASKET, COVER	GUARNIZIONE	1
40	90119-06MA4		TORNILLO CON ARANDELA	BOLT WITH WASHER	VITE CON RONDELLA	4
41	663-41113-00-1S		CUBIERTA EXTERIOR DE ESCAPE	OUTTER COVER EXHAUST	COPERCHIO ESTERNO DI SCARICO	1
42	663-41114-A0	**REC663-41114-00**	JUNTA	GASKET, EXHAUST OUTTER COVER	GUARNIZIONE COPERCHIO SCARICO	1
43	90119-06MA2		TORNILLO CON ARANDELA	BOLT, WITH WASHER	VITE CON RONDELLA	9
44	650-24378-00		TUBO DE UNIÓN	PIPE, JOINT	GIUNTO PER TUBO	1
45	663-24312-01		TUBO	PIPE	TUBO	1
46	90467-08004		PRESILLA	CLIP	CLIP	2
47	663-11411-01	**REC663-11411-00**	CIGÜEÑAL	CRANKSHAFT	ALBERO MOTORE	1
48	93311-632U1	**REC93311-632U1**	COJINETE DE RODILLOS	BEARING	CUSCINETTO A RULLI	1
49	93102-32M07	**REC93102-32M07**	RETÉN DE ACEITE	OIL SEAL	PARAOLIO	1
50	93210-42159	**REC93210-42159**	JUNTA TÓRICA	O-RING	O-RING	1
51	93311-832U4	**REC93311-832U4**	COJINETE DE RODILLOS	BEARING	CUSCINETTO A RULLI	1
52	93306-206U4		COJINETE	BEARING	CUSCINETTO	1
53	663-11561-00	**REC663-11561-00**	ARANDELA DE MANIVELA	SHIM, CRANK	SPESSORE	1
54	688-11631-03-94	**REC688-11631-03K**	PISTÓN (NORMA)	PISTON (STD)	PISTONE (STD)	2
	688-11635-03	**REC688-11635-03K**	PISTÓN (0.25mm O/S)	PISTON (0.25mm O/S)	PISTONE (0.25mm O/S)	2
	688-11636-03	**REC688-11636-03K**	PISTÓN (0.50mm O/S)	PISTON (0.50mm O/S)	PISTONE (0.50mm O/S)	2
55	688-11603-A0	**REC688-11603-A0**	JUEGO DE ANILLOS (NORMA)	PISTON RING SET (STD)	SET FASCE PISTONI (STD)	2
	688-11604-A0	**REC688-11604-A0**	PISTÓN (0.25mm O/S)	PISTON (0.25mm O/S)	PISTONE (0.25mm O/S)	2
	688-11605-A0	**REC688-11605-A0**	PISTÓN (0.50mm O/S)	PISTON (0.50mmO/S)	PISTONE (0.50mm O/S)	2
56	663-11633-00	**REC663-11633-00**	PASADOR PISTÓN	PIN PISTON	SPINOTTO PISTONE	2
57	688-11634-00	**REC688-11634-00**	PRESILLA BULÓN DE PISTÓN	CLIP	FERMO SPINOTTO	4
58	688-11650-03	**REC688-11650-03**	BIELA COMPLETA	CONNECTING ROD ASSY	BIELLA COMPLETA	2
59	90109-08022	**REC90109-08022**	PERNO	BOLT	PERNO	2
60	93603-21111	**REC93603-21111**	PASADOR DE CLAVIJA	PIN DOWEL	PERNO PASSANTE	56
61	93310-730V8	**REC93310-730V8**	COJINETE DE RODILLOS	BEARING	CUSCINETTO A RULLI	2
62	90201-20417	**REC90201-20417**	ARANDELA PLANA	WASHER	RONDELLA PIANA	4
63	94702-00160	**NGKB8HS-10**	BUJÍA	PLUG, SPARK (55E ENGINES)	CANDELA	2
	94702-00040	**NGKB7HS**	BUJÍA	PLUG, SPARK (E48C ENGINES)	CANDELA	2
	94702-00041	**NGKB8HS**	BUJÍA	PLUG, SPARK (E55C ENGINES)	CANDELA	2
	697-W0001-02	**REC697-W0001-02**	KIT JUEGO JUNTAS MOTOR	POWER HEAD GASKET	KIT GUARNIZIONI MOTORE	1

RECAMBIOS MARINOS S.L.

50G/GEO/GETO - 60F/FEDO/FEHT/FEO/FET/FETO 60TDR/TLR-B/TR-Z - 70B/BEHDO/BEMO/BEO/BETO - 70TDR/TR

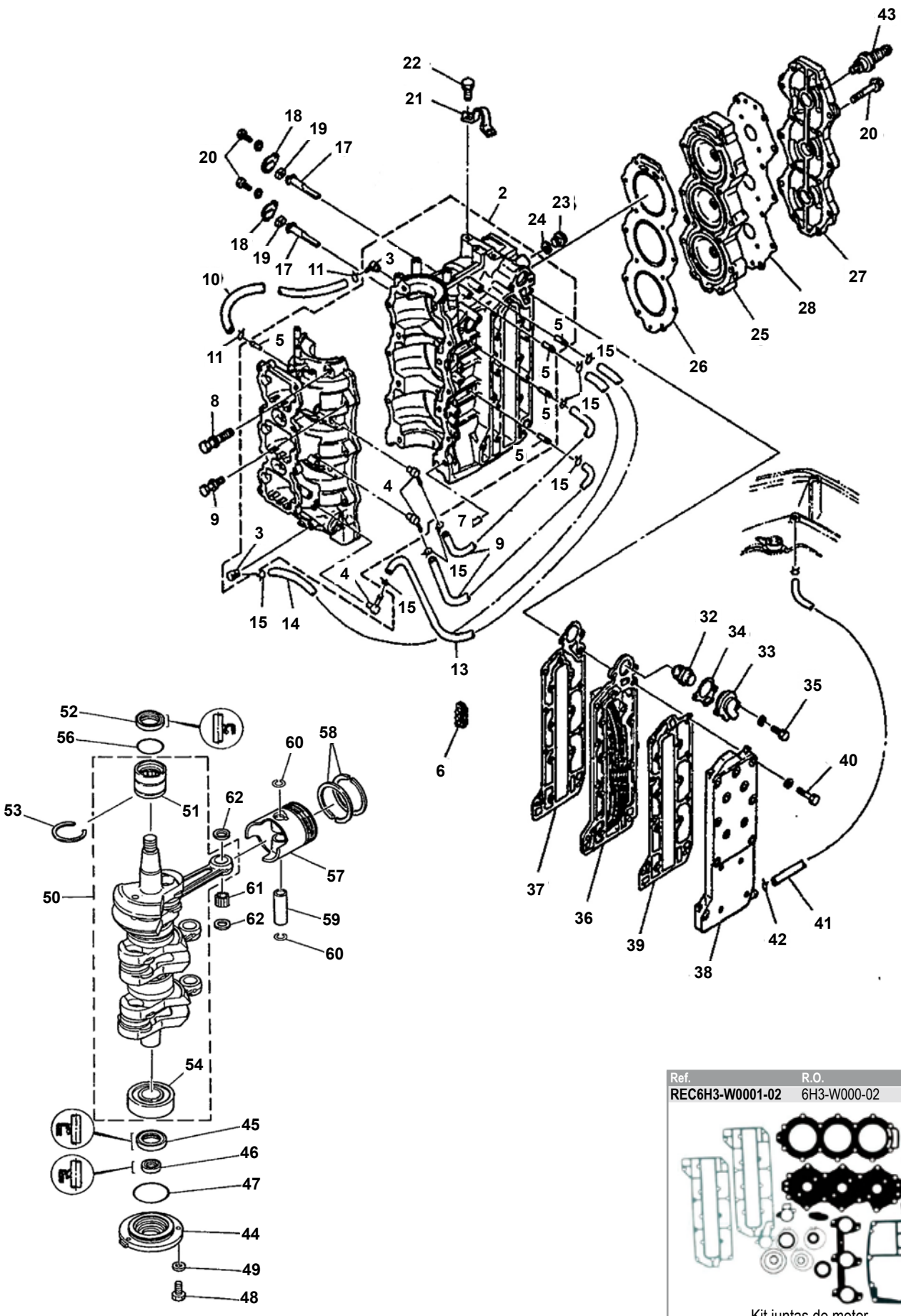

Ref.	R.O.
REC6H3-W0001-02	6H3-W000-02

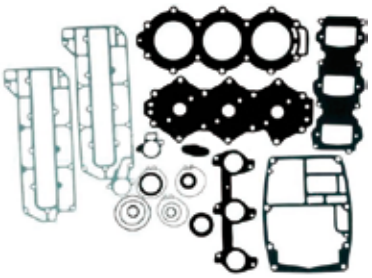

Kit juntas de motor
Power head gasket kit
Kit guarnizione motore

Nº	R.O. OEM	Ref.	Descripción	Description	Descrizione	Cantidad Quanty Quantità
3	688-11370-01	**REC688-11370-00**	VÁLVULA	CHECK VALVE ASSY	VALVOLA	2
4	650-11370-01	**REC650-11370-00**	VÁLVULA	CHECK VALVE ASSY	VALVOLA	3
5	624-14485-00		TUBO	PIPE JOINT	GIUNTO PER TUBO	5
6	650-24378-00		TUBO	PIPE JOINT	GIUNTO PER TUBO	4
7	93608-12063		PIN	DOWEL	SPINOTTO CENTRAGGIO	2
8	90119-10005		TORNILLO	BOLT WITH WASHER	VITE	8
9	90119-08M64		TORNILLO	BOLT WITH WASHER	VITE	6
10	90445-07M44		TUBO	HOSE (L250)	TUBO	1
11	90467-06016		CLIP	NUT	CLIP	2
12	90445-07M02	**REC90445-07MA3**	TUBO	HOSE (L167)	TUBO	2
13	90445-07M45		TUBO	HOSE (L340)	TUBO	1
14	90445-07M82		TUBO	HOSE (L440)	TUBO	1
15	90467-06016		CLIP	HOUSING OIL SEAL	CLIP	8
16	90464-07M05	**PAF25-05000016**	ABRAZADERA	CLAMP	FASCETTA	1
17	6H3-11325-01	**CM6H3-11325-01**	ÁNODO	ANODE	ANODO	2
18	6H3-11327-00-1S		TAPA	COVER, ANODE	COPERCHIO ANODO	2
19	6H3-11328-00		JUNTA	GROMMET ANODE	GUARNIZIONE ANODO	2
20	90119-06023		TORNILLO	BOLT WITH WASHER	VITE	2
21	688-11119-01		TIRANTE	HANGER ENGINE	TIRANTE	1
22	90101-08022		TORNILLO	BOLT	VITE	2
23	90340-14M00	**PAF15-04000002**	TAPÓN	PLUG STRAIGHT SCREW	TAPPO	1
24	90430-14115	**REC90430-14115**	JUNTA	GASKET	GUARNIZIONE	1
25	6H3-11111-01-1S		CULATA	HEAD CYLINDER 1	TESTATA	1
26	6H3-11181-A2	**REC6H3-11181-A0**	JUNTA CULATA	GASKET, HEAD	GUARNIZIONE TESTATA	1
27	6H3-11191-00-1S		CULATÍN	COVER, CYLINDER	COPERCHIO CILINDRO	1
28	6H3-11193-A1	**REC6H3-11193-A1**	JUNTA CULATÍN	GASKET, COVER	GUARNIZIONE COPERCHIO	1
29	90119-08MA5		TORNILLO	BOLT WITH WASHER	VITE	13
30	90116-08M69		TORNILLO	BOLT STUD	VITE	1
31	90179-08M34		TUERCA	NUT	DADO	1
32	6H3-12411-10	**REC6H3-12411-10**	TERMOSTATO	THERMOSTAT	TERMOSTATO	1
33	6H3-12413-00-1S		TAPA	COVER, THERMOSTAT	COPERCHIO TERMOSTATO	1
34	6H3-12414-A1	**REC6H3-12414-A1**	JUNTA	GASKET COVER	GUARNIZIONE	1
35	90119-065MA3		TORNILLO	BOLT WITH WASHER	VITE	2
36	6H3-41111-01-1S		PLACA	INNER COVER, EXHAUST	PIASTRA	1
37	6H3-41112-A0	**REC6H3-41112-A0**	JUNTA	GASKET, EXHAUST COVER	GUARNIZIONE COPERCHIO	1
38	6H3-41113-02-1S		TAPA	OUTTER COVER, EXHAUST	COPERCHIO SCARICO	1
39	6H3-41114-A0	**REC6H3-41114-A0**	JUNTA	GASKET, OUTTER COVER	GUARNIZIONE	1
40	90119-06MA5		TORNILLO	BOLT WITH WASHER	VITE	16
41	663-24312-01		TUBO	PIPE 2	TUBO	1
42	90467-08004		CLIP	HOUSING OIL SEAL	CLIP	1
43	94702-00247	**NGKBR8HS-10**	BUJÍA	PLUG, SPARK	CANDELA	3
44	6H3-15359-00-94		CUERPO RETÉN	HOUSING OIL SEAL	PARAOLIO	1
45	93102-30M23	**REC93102-30M23**	RETÉN	OIL SEAL	PARAOLIO	1
46	93106-18M01	**REC93106-18M01**	RETÉN	OIL SEAL	PARAOLIO	1
47	93210-65M50	**REC93210-65M50**	ARO TÓRICO	O-RING	O-RING	1
48	97095-06020		TORNILLO	BOLT	VITE	3
49	92995-06600	**PAGB/T97.1-85**	ARANDELA	WASHER	RONDELLA	3
50	6H3-11400-10-11		CIGÜEÑAL	CRANKSHAFT ASSY	ALBERO MOTORE	1
	6H3-11400-03		CIGÜEÑAL	CRANKSHAFT ASSY (60FET ENGINE)	ALBERO MOTORE	1
51	93311-636U6	**REC93311-636U6**	RODAMIENTO	BEARING	CUSCINETTO	1
52	93102-36M24	**REC93102-36M24**	RETÉN	OIL SEAL	PARAOLIO	1
53	93440-49M04	**REC93440-49M04**	CIERRE	CIRCLIP	CLIP CHIUSURA	1
54	93306-306V1	**REC93306-306V1**	RODAMIENTO	BEARING	CUSCINETTO	1
56	93210-46M16	**REC93210-46M16**	ARO TÓRICO	O-RING	O-RING	1
57	6H3-11631-01-96	**REC6H3-11631-01K**	PISTÓN (STD)	PISTON	PISTONE (STD)	3
	6H3-11635-01	**REC6H3-11635-01K**	PISTÓN (0.25mm O/S)	PISTON (0.25mm O/S)	PISTONE (0.25mm O/S)	3
	6H3-11636-01	**REC6H3-11636-01K**	PISTÓN (0.50mm O/S)	PISTON (0.50mm O/S)	PISTONE (0.50mm O/S)	3
58	6K5-11601-02	**REC6K5-11601-02**	SEGMENTOS	PISTON RING SET (STD)	SET FASCE	3
	6K5-11601-12	**REC6H3-11601-12**	SEGMENTOS	RING SET (0.25mm O/S)	SET FASCE	3
	6K5-11601-22	**REC6H3-11601-22**	SEGMENTOS	RING SET (0.50mm O/S)	SET FASCE	3
59	6H3-11633-00	**REC6H3-11633-00**	BULÓN	PIN, PISTON	SPINOTTO	3
60	688-11634-10	**REC688-11634-00**	CLIP	PISTON PIN	CLIP	6
61	93603-18M09	**REC93603-18M09**	PIN	DOWEL	SPINOTTO	84
62	90201-20417	**REC90201-20417**	ARANDELA	WASHER, PLATE	RONDELLA	6

75A/AED/AET- 75EHD - 85A/AED/AED-TUNA/AET/AEHD

Ref.	R.O.
REC688-W0001-02	688-W0001-02

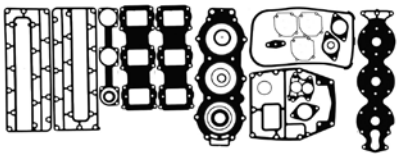

Kit juntas de motor
Power head gasket kit
Kit guarnizione motore

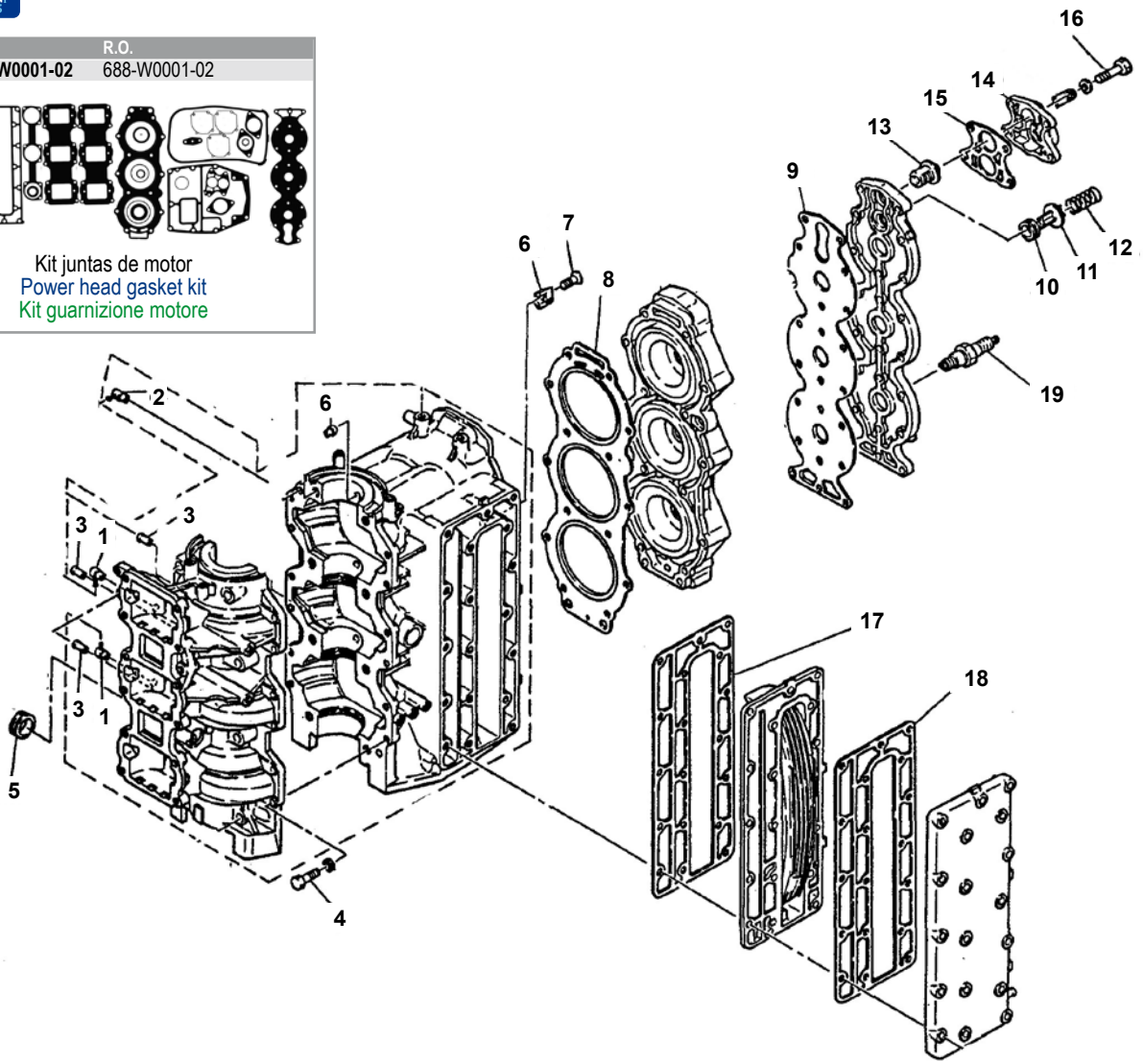

Nº	R.O. OEM	Ref.	Descripción	Description	Descrizione	Cantidad Quanty Quantità
1	688-11370-01	**REC688-11370-01**	VÁLVULA	CHECK VALVE ASSY	VALVOLA	2
2	650-11370-01	**REC650-11370-00**	VÁLVULA	CHECK VALVE ASSY	VALVOLA	1
3	624-14485-00		TUBO	PIPE JOINT	TUBO	4
5	93608-12063		PIN	DOWEL	SPINOTTO CENTRAGGIO	2
5	90480-24M04		JUNTA GOMA	GROMMET	GUARNIZIONE GOMMINO	1
6	688-11325-00	**CM688-11325-00**	ÁNODO	ANODE	ANODO	2
7	98780-04015		TORNILLO	SCREW, FLAT HEAD	VITE	2
8	688-11181-A1	**REC688-11181-A1**	JUNTA CULATA	GASKET, CYLINDER HEAD	GUARNIZIONE TESTATA	1
9	688-11193-A1	**REC688-11193-A1**	JUNTA CULATA	GASKET, HEAD COVER	GUARNIZIONE COPERCHIO TESTATA	1
10	90480-20M05		JUNTA GOMA	GROMMET	GUARNIZIONE GOMMA	1
11	688-12416-00		VÁLVULA	VALVE, PRESSURE CONTROL	VALVOLA	1
12	90501-16M11		MUELLE	SPRING, COMPRESSION	MOLLA	1
13	688-12411-10	**REC688-12411-10**	TERMOSTATO	THERMOSTAT	TERMOSTATO	1
14	688-12413-00-1S		TAPA	COVER, THERMOSTAT	COPERCHIO	1
15	688-12414-A1	**REC688-12414-A1**	JUNTA TAPA	GASKET, COVER	GUARNIZIONE COPERCHIO	1
16	90119-06MA5		TORNILLO	BOLT, WITH WASHER	VITE	4
17	688-41112-A0	**REC688-41112-A0**	JUNTA	GASKET, EXHAUST INNER COVER	GUARNIZIONE	1
18	688-41114-A0	**REC688-41114-A0**	JUNTA	GASKET, EXHAUST OUTTER COVER	GUARNIZIONE	1
19	NGK-B8HS10-PK10	**NGKB8HS-10**	BUJÍA	PLUG, SPARK (NGK B8HS-10)	CANDELA	3

75A/AED/AET- 75EHD - 85A/AED/AED-TUNA/AET/AEHD

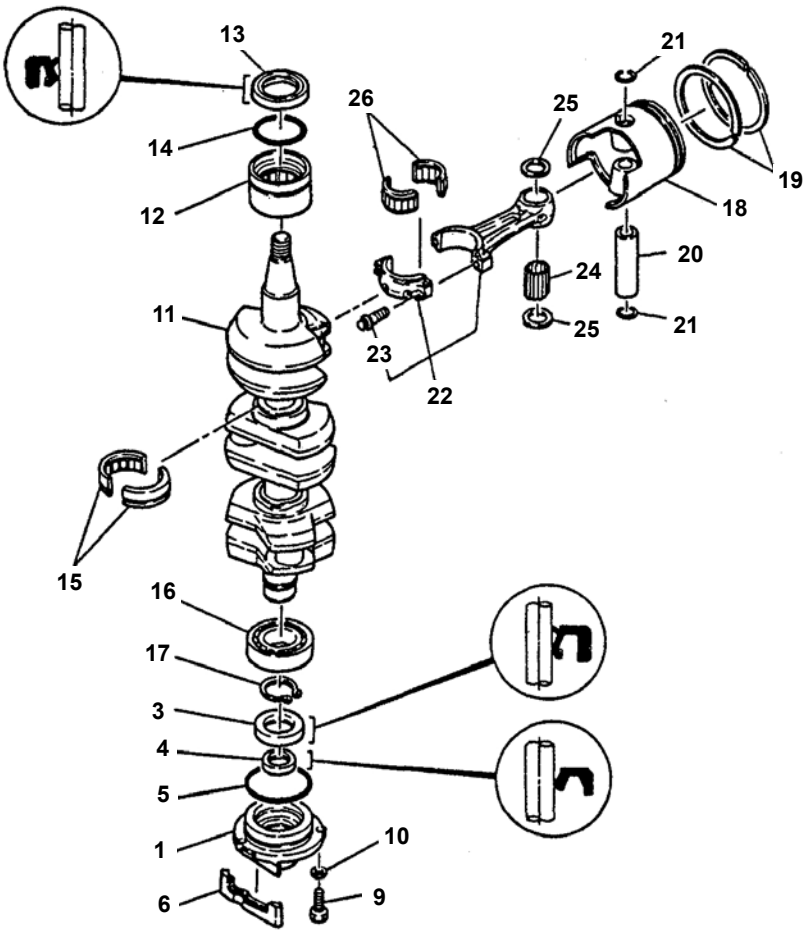

Nº	R.O. OEM	Ref.	Descripción	Description	Descrizione	Cantidad Quanty Quantità
1	6H1-15359-01-94		CUERPO RETÉN	HOUSING, OIL SEAL	ALLOGGIAMENTO PARAOLIO	1
2	688-11370-01	**REC688-11370-00**	VÁLVUL A	CHECK VALVE ASSY	VALVOLA	1
3	93102-30M05	**REC93102-30M05**	RETÉN	OIL SEAL	PARAOLIO	1
4	93104-20M02	**REC93104-20M02**	RETÉN	OIL SEAL	PARAOLIO	1
5	93210-62269	**REC93210-62269**	ARO TÓRICO	O - RING	O-RING	1
11	688-11411-01	**REC688-11411-00**	CIGÜEÑAL	CRANKSHAFT	ALBERO MOTORE	1
12	93310-636U4	**REC93310-636U4**	RODAMIENTO	BEARING	CUSCINETTO	1
13	93102-36M02	**REC93102-36M02**	RETÉN	OIL SEAL	PARAOLIO	1
14	93210-46M16	**REC93210-46M16**	ARO TÓRICO	O -RING	O-RING	1
15	93310-835U8	**REC93310-835U8**	RODAMIENTO	BEARING	CUSCINETTO	2
16	93306-206U5	**REC93306-206U5**	RODAMIENTO	BEARING	CUSCINETTO	1
18	688-11631-03-94	**REC688-11631-03K**	PISTÓN (STD)	PISTON (STD)	PISTONE	3
19	688-11603-A0	**REC688-11603-A0**	SEGMENTOS	PISTON RING TEST (STD)	SET FASCE	3
	688-11604-A0	**REC688-11604-A0**	SEGMENTOS	RING SET (0.25mm O/S)	SET FASCE	3
	688-11605-A0	**REC688-11605-A0**	SEGMENTOS	RING SET (0.50mm O/S)	SET FASCE	3
20	663-11633-00	**REC663-11633-00**	BULÓN	PIN PISTON	SPINOTTO	3
21	688-11634-00	**REC688-11634-00**	CLIP	CLIP PISTON PIN	FERMO SPINOTTO	6
22	688-11650-03	**REC688-11650-03**	BIELA	CONNECTING ROD ASSY	BIELLA	3
23	90109-08022	**REC90109-08022**	TORNILLO	BOLT	VITE	2
24	93603-21111	**REC93603-21111**	AGUJAS RODAMIENTO	PIN, DOWEL	SPINOTTO DI CENTRAGGIO	84
25	90201-20417	**REC90201-20417**	ARANDELA	WASHER, PLATE	RONDELLA	6
26	93310-730V8	**REC93310-730V8**	RODAMIENTO	BEARING	CUSCINETTO	3

100A/AETO - 100TLR - 115AEL/B/BETO/BE-TR/C/CEO/CETO C115TLR - 130B/BETO - 130TLR/TLRZ - 140A - 140B

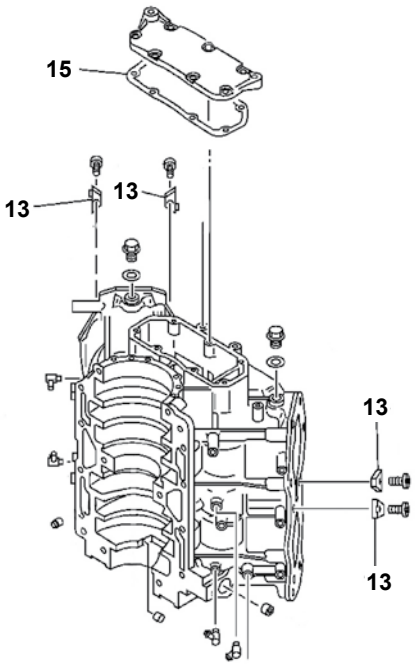

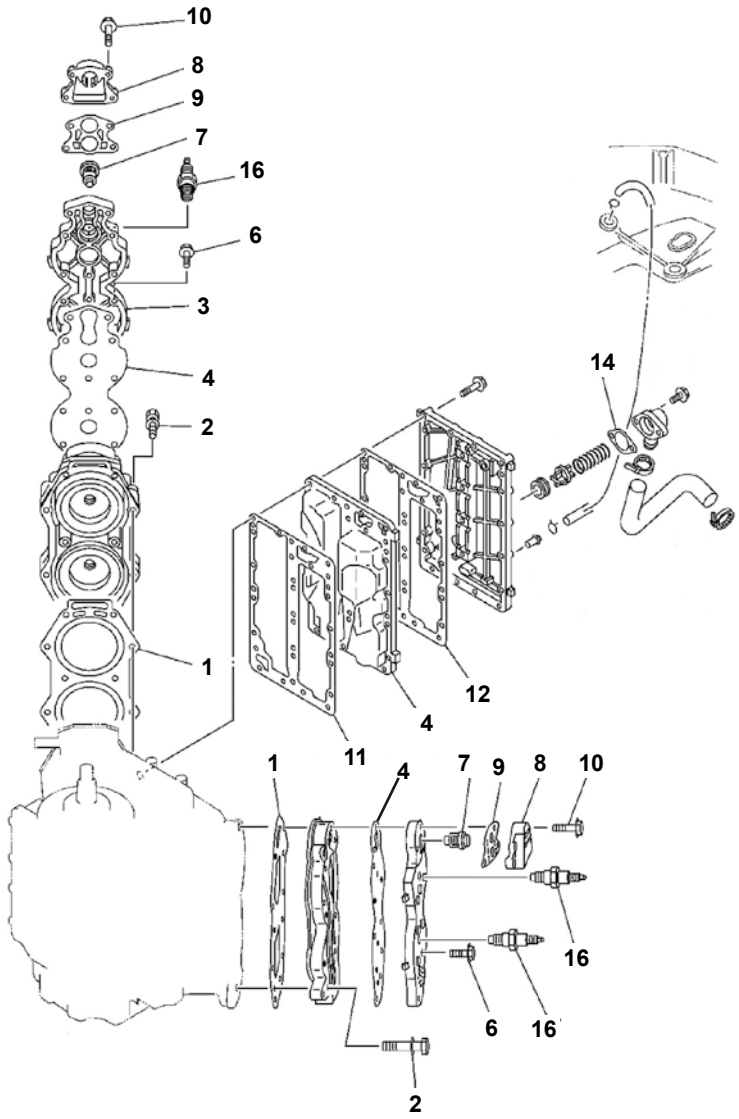

Ref.	R.O.
REC6N6-W0001-A3	6N6-W0001-A3

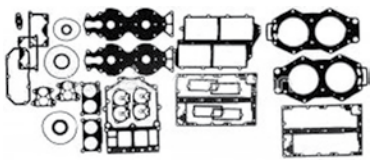

Kit juntas de motor
Power head gasket kit
Kit guarnizione motore

Nº	R.O. OEM	Ref.	Descripción	Description	Descrizione	Cantidad Quanty Quantità
1	6E5-11181-A2	**REC6E5-11181-A0**	JUNTA CULATA	GASKET, CYLINDER HEAD	GUARNIZIONE TESTATA	2
2	90119-08MA8		TORNILLO	BOLT, WITH WASHER	VITE	20
3	6E5-11191-01-1S		CULATÍN	COVER, CYLINDR HEAD	COPERCHIO TESTA CILINDRO	2
4	6E5-11193-A0	**REC6E5-11193-A0**	JUNTA CULATÍN	GASKET, HEAD COVER	GUARN. COPERCHIO TESTA	2
6	90119-06MA4		TORNILLO	BOLT, WITH WASHER	VITE	24
7	REC6E5-12411-30	**REC6E5-12411-30**	TERMOSTATO	THERMOSTAT	TERMOSTATO	2
8	6G5-12413-00-1S		TAPA	COVER, THERMOSTAT	COPERCHIO TERMOSTATO	2
9	688-12414-A1	**REC688-12414-00**	JUNTA	GASKET COVER	GUARNIZIONE	2
10	90119-06MA6		TORNILLO	BOLT WITH WASHER	VITE	8
11	6E5-41112-A1	**REC6E5-41112-A1**	JUNTA	GASKET, EXHAUST INNER COVER	GUARNIZIONE	1
12	6E5-41112-A1	**REC6E5-41112-A1**	JUNTA	GASKET, EXAHUST INNER COVER	GUARNIZIONE	1
13	6E5-11325-00	**TEN01152**	ÁNODO	ANODE	ANODO	4
14	6G5-11382-A1	**REC6G5-11382-A1**	JUNTA	GASKET	GUARNIZIONE	1
15	6E5-11381-A2	**REC6E5-11381-A1**	JUNTA	GASKET	GUARNIZIONE	1
16	94702-00247	**NGKBR8HS-10**	BUJÍA	PLUG, SPARK (NGK BR8HS-10) (115C ENGINES)	CANDELA	4
	94702-00309	**NGKBR9HS-10**	BUJÍA	PLUG, SPARK (NGK BR9HS-10) (130B ENGINES)	CANDELA	4

100A/AETO - 100TLR - 115AEL/B/BETO/BE-TR/C/CEO/CETO C115TLR - 130B/BETO - 130TLR/TLRZ - 140A - 140B

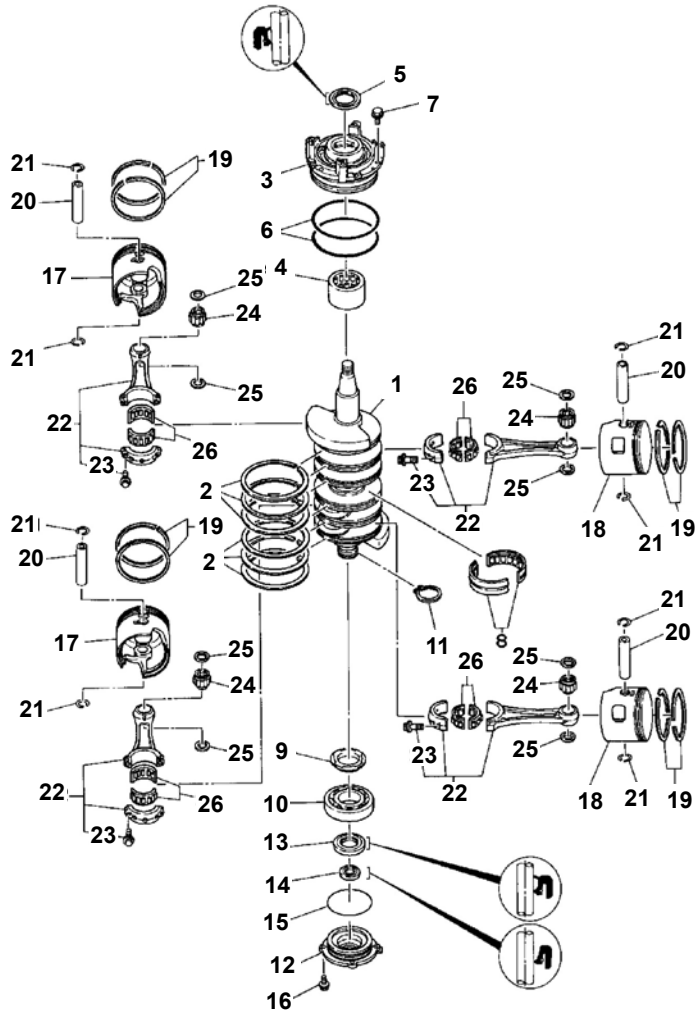

Nº	R.O. OEM	Ref.	Descripción	Description	Descrizione	Cantidad Quanty Quantità
1	6N7-11411-00	**REC6N7-11411-00**	CIGÜEÑAL	CRANKSHAFT	ALBERO MOTORE	1
2	6E5-11447-00	**REC6E5-11447-00**	ARO	SEAL, CRANK	O-RING	6
4	93311-940U3	**REC93311-940U3**	RODAMIENTO	BEARING	CUSCINETTO	1
5	93102-40M14	**REC93102-40M14**	RETÉN	OIL SEAL	PARAOLIO	1
6	93211-04001	**REC93211-04001**	ARO TÓRICO	O-RING	O-RING	2
8	93310-954U1	**REC93310-954U1**	RODAMIENTO	BEARING	CUSCINETTO	1
10	93306-208U0	**REC93306-208U0**	RODAMIENTO	BEARING	CUSCINETTO	1
13	93102-35M13	**REC93102-35M13**	RETÉN	OIL SEAL	PARAOLIO	1
14	93101-22M15	**REC93101-22M15**	RETÉN	OIL SEAL	PARAOLIO	1
15	93210-74M35	**REC93210-74M35**	ARO TÓRICO	O-RING	O-RING	1
17	6R5-11361-11-93	**REC6R5-11631-11K**	PISTÓN	PISTON (STD)	PISTONE (STD)	2
	6R5-11635-11	**GLM24730**	PISTÓN	PISTON (0.25mm O/S)	PISTONE	2
	6R5-11636-11	**GLM24750**	PISTÓN	PISTON (0.50mm O/S)	PISTONE	2
18	6R5-11642-11-93	**REC6R5-11642-11K**	PISTÓN	PISTON 2(STD)	PISTONE	2
	6R5-11645-11	**GLM24720**	PISTÓN	PISTON 2 (0.25mm O/S)	PISTONE	2
	6R5-11646-11	**GLM24740**	PISTÓN	PISTON 2 (0.50mm O/S)	PISTONE	2
19	64D-11603-01	**REC64D-11603-01**	SEGMENTOS	PISTON RING SET (STD)	SET FASCE	4
	64D-11604-01	**REC64D-11604-01**	SEGMENTOS	PISTON RING SET (0.25mm O/S)	SET FASCE	4
	64D-11605-01	**REC64D-11605-01**	SEGMENTOS	PISTON RING SET (0.50mm O/S)	SET FASCE	4
20	6R5-11633-10	**REC6R5-11633-00**	BULÓN	PIN, PISTON	SPINOTTO	4
21	6R5-11634-10	**REC6R5-11634-00**	CLIP BULÓN	CLIP, PISTON PIN	FERMO SPINOTTO	8
22	6R5-11650-10	**REC6R5-11650-10**	BIELA	CONNECTING ROD ASSY	BIELLA	4
23	90109-08M71	**REC90109-08M71**	TORNILLO	BOLT	VITE	2
24	93310-323V6	**REC93310-323V6**	RODAMIENTO	BEARING	CUSCINETTO	4
25	90201-23M01	**REC90201-23M01**	ARANDELA	WASHER, PLATE	RONDELLA	8
26	93310-836V2	**REC93310-836V2**	RODAMINETO	BEARING	CUSCINETTO	4

RECAMBIOS MARINOS S.L.

150AET - 150F/FETO - 150L/SL150 - 150TR/150TXRA - D150H
175D/DETO - S175 -L175 - 175D/DETO - S175 -L175
200AET - 200G/GETO - 200F/FETO - L200 - 200TLR
225D/DET/DETO - L225A - L225B

Ref.	R.O.
REC6G5-W0001-A3	6G5-W0001-A3-00

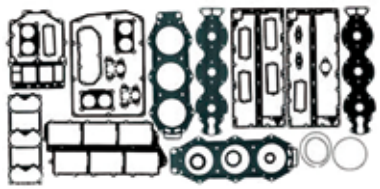

Kit juntas de motor
Power head gasket kit
Kit guarnizione motore

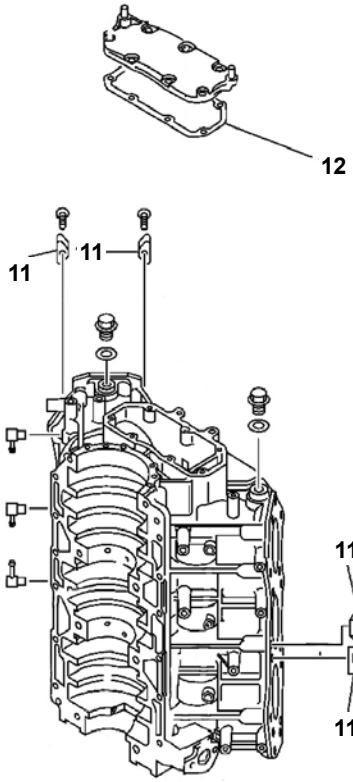

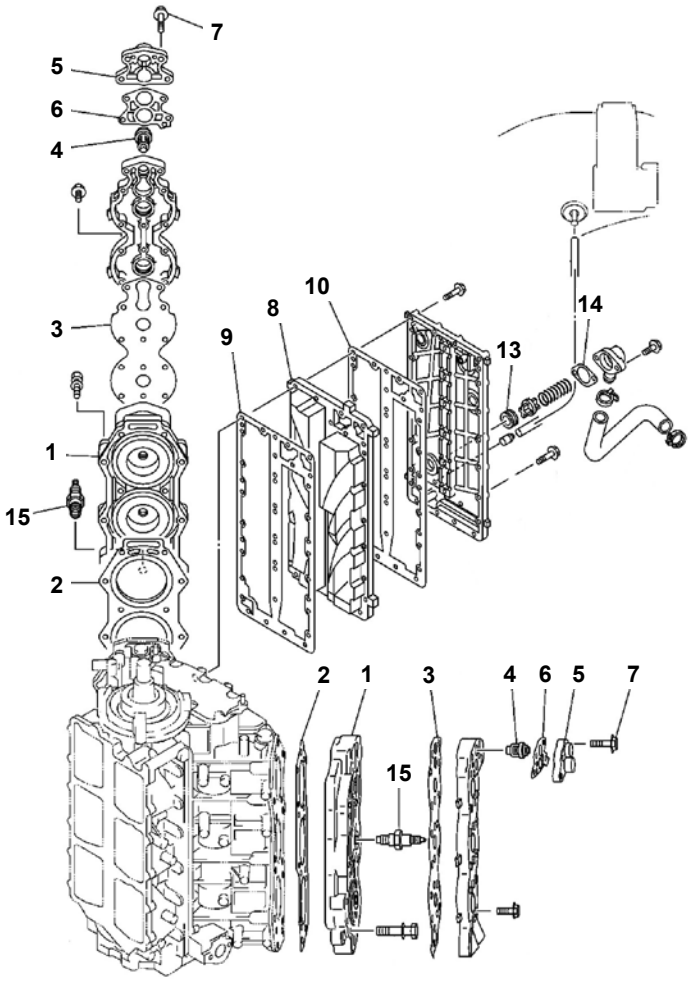

Nº	R.O. OEM	Ref.	Descripción	Description	Descrizione	Cantidad Quanty Quantità
1	6G5-11111-04-1S		CULATA	HEAD CYLINDER	TESTA	2
	64E-11111-00-1S		CULATA	HEAD CYLINDER	TESTA	2
2	6G5-11181-A3	**REC6G5-11181-A2**	JUNTA CULATA	GASKET, CYLINDER HEAD 2	GUARNIZIONE TESTA CILINDRO	2
3	6G5-11193-A0	**REC6G5-11193-A0**	JUNTA TAPA	GASKET, HEAD COVER	GUARNIZIONE COPERCHIO TESTA	2
4	6E5-12411-30	**REC6E5-12411-30**	TERMOSTATO	THERMOSTAT	TERMOSTATO	2
5	688-12413-00-1S		TAPA	COVER, THERMOSTAT	COPERCHIO	2
6	688-12414-A1	**REC688-12414-00**	JUNTA TAPA	GASKET COVER	GUARNIZIONE COPERCHIO	2
7	90119-06MA6		TORNILLO	BOLT, WITH WASHER	VITE	8
8	64D-41111-00-1S		TAPA	INNER COVER, EXHAUST	COPERCHIO	1
9	6G5-41112-A1	**REC6G5-41112-A1**	JUNTA	GASKET, EXHAUST INNER COVER	GUARNIZIONE	1
10	6G5-41114-A0	**REC6G5-41114-A0**	JUNTA	GASKET, EXHAUST OUTTER COVER	GUARNIZIONE	1
11	6E5-11325-00	**CM6E5-11325-00**	ÁNODO	ANODE	ANODO	8
12	6E5-11381-A2	**REC6E5-11381-A1**	JUNTA	GASKET	GUARNIZIONE	1
13	90480-20M05		JUNTA GOMA	GROMMET	GUARNIZIONE GOMMA	1
14	6G5-11382-A1	**REC6G5-11382-A1**	JUNTA	GASKET	GUARNIZIONE	1
15	94702-00271	**NGKBR8HS-10**	BUJÍA	PLUG, SPARK (NGK BR8HS-10)	CANDELA	6

150AET - 150F/FETO - 150L/SL150 - 150TR/150TXRA - D150H
175D/DETO - S175 -L175 - 175D/DETO - S175 -L175
200AET - 200G/GETO - 200F/FETO - L200 - 200TLR
225D/DET/DETO - L225A - L225B

2 TIEMPOS STROKES

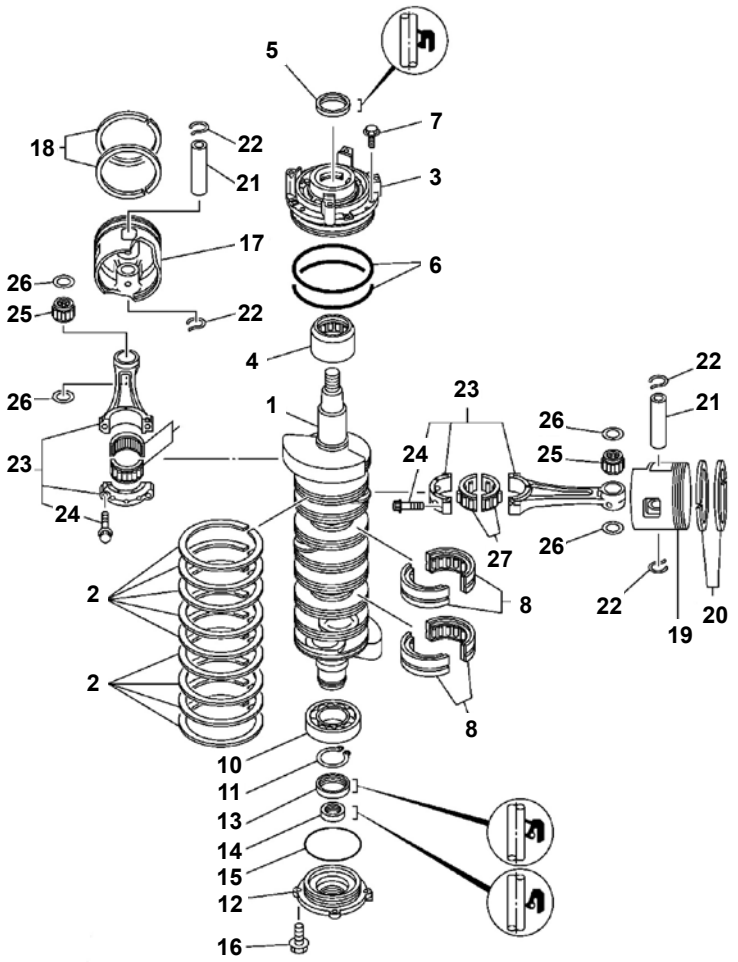

Nº	R.O. OEM	Ref.	Descripción	Description	Descrizione	Cantidad Quanty Quantità
1	6G5-11411-02	**REC6G5-11411-02**	CIGÜEÑAL	CRANKSHAFT	ALBERO MOTORE	1
2	6E5-11447-00	**REC6E5-11447-00**	ARILLO	SEAL, CRANK	O-RING	9
4	93311-940U3	**REC93311-940U3**	RODAMIENTO	BEARING	CUSCINETTO	1
5	93102-40M14	**REC93102-40M14**	RETÉN	OIL SEAL	PARAOLIO	1
6	93211-04001	**REC93211-04001**	ARO TÓRICO	O-RING	O-RING	2
8	93310-954U1	**REC93310-954U1**	RODAMIENTO	BEARING	CUSCINETTO	2
10	93306-208U0	**REC93306-208U0**	RODAMIENTO	BEARING	CUSCINETTO	1
13	93102-35M13	**REC93102-35M13**	RETÉN	OIL SEAL	PARAOLIO	1
14	93101-22M15	**REC93101-22M15**	RETÉN	OIL SEAL	PARAOLIO	1
15	93210-74M35	**REC93210-74M35**	ARO TÓRICO	O-RING	O-RING	1
17	64D-11631-02-90	**REC64D-11631-00K**	PISTON (STD)	PISTON (STD)	PISTONE	3
18	64D-11603-02	**REC64D-11603-01**	SEGMENTOS	RING SET (STD)	SET FASCE	3
	64D-11604-02	**REC64D-11604-01**	SEGMENTOS	RING SET (0.250/S)	SET FASCE	3
	64D-11605-02	**REC64D-11605-01**	SEGMENTOS	RING SET (0.500/S)	SET FASCE	3
19	64D-11642-02-90	**REC64D-11642-00K**	PISTON 2 (STD)	PISTON 2 (0.25mm O/S)	PISTONE	3
20	64D-11603-02	**REC64D-11603-01**	SEGMENTOS	PISTON RING SET (STD)	SET FASCE	3
	64D-11604-02	**REC64D-11604-01**	SEGMENTOS	PISTON RING SET (0.25mm O/S)	SET FASCE	3
	64D-11605-02	**REC64D-11605-01**	SEGMENTOS	PISTON RING SET (0.5mm O/S)	SET FASCE	3
21	6R5-11633-10	**REC6R5-11633-00**	BULÓN	PIN, PISTON	SPINOTTO	6
22	6R5-11634-10	**REC6R5-11634-00**	CLIP	CLIP, PISTON PIN	CLIP	12
23	6R5-11650-10	**REC6R5-11650-10**	BIELA	CONNECTING ROD ASSY	BIELLA	6
24	90109-08022	**REC90109-08022**	TORNILLO	BOLT	VITE	2
25	93310-32337	**REC93310-32337**	RODAMIENTO	BEARING	CUSCINETTO	6
26	90201-23M01	**REC90201-23M01**	ARANDELA	WASHER, PLATE	RONDELLA	12
27	93310-836V2	**REC93310-836V2**	RODAMIENTO	BEARING	CUSCINETTO	6

RECAMBIOS MARINOS S.L.

PISTONES, AROS, BULONES Y RODAMIENTOS
PISTONS, RINGS, PINS AND BEARINGS
PISTONI, FASCE, BULLONI E CUSCINETTI

La gama de pistones RECMAR®, se suministrará siempre como kit, compuesto por pistón, aros, bulón y clips. Eventualmente las referencias antiguas sufren cambios de numeración. En caso de duda contacten con nuestros técnicos comerciales.
The RECMAR® piston assortment is allways supplied as a set (piston, rings, pins and bearings). Old references may change. In case of any doubt contact our technicians.
La gamma dei pistoni RECMAR®, si vende sempre come kit, composto da pistoni, fasce, bulloni e clips. Le referenze vecchie avranno un cambio di numerazione. In caso di dubbi contattare i nostri tecnici commerciali.

MOTORES 4 TIEMPOS
4 STROKES ENGINES
MOTORI 4 TEMPI

Ref.	R.O.		
PAF2.6-04020001	69M-E1631-01-96	Pistón / Piston / Pistoni	STD
PAF2.6-04020005	69M-E1633-00	Bulón / Pin / Bullone	
REC69M-E1603-01	69M-E1603-01	Aros / Rings / Fasce	STD
	93450-13130	Clip	

MOTORES / ENGINES / MOTORI
F2.5AMH/MLH/MH/MSH (2004+)

Ref.	R.O.		
PAF4-04020200	68D-E1631-00-96	Pistón / Piston / Pistoni	STD
PAF4-04020005	68D-E1633-00	Bulón / Pin / Bullone	
REC68D-E1603-00	68D-E1603-00	Aros / Rings / Fasce	STD
PAF4-04020006	93450-14088	Clip	

MOTORES / ENGINES / MOTORI
F4A/MSHA/AMH/MLHB-D/MH (2002-09)

Ref.	R.O.		
PAF15-07020001	66M-11631-00-96	Pistón / Piston / Pistoni	STD
PAF15-07020006	634-11633-00	Bulón / Pin / Bullone	
REC66N-11603-00	66N-11603-00	Aros / Rings / Fasce	STD
PAF15-07020005	93450-15023	Clip	

MOTORES / ENGINES / MOTORI
F9.9C/CE/CMH/CWH/D (1998-08)
F13.5AMH/AEH/AEP (2000-07)
FT/F15A/PR/PLR/AEP/ELH/MH/AE/AM (2000-07)

Ref.	R.O.		
PAF25-05020100	65W-11631-00-96	Pistón / Piston / Pistoni	STD
PAF25-05020105	62Y-11633-00	Bulón / Pin / Bullone	
REC67C-11603-00	67C-11603-00	Aros / Rings / Fasce	STD
PAF25-05020106	93450-17129	Clip	

MOTORES / ENGINES / MOTORI
F20AES/AET/AE-S (2003-06)
F25ELH/AE/AW/A/AET/MHZ/MHA/AM/AEH/A-ES/T25ELRZ-T/FT25B (1998-09)
F30A/ERZ/MLH/AET/ELHB/AMH/TR/AWH/ETL (2001-09)
F40B/ELH/BE/ERZ/ERA/BMH/BWH (2000-09)

Ref.			
WI3207PS	Pistón / Piston / Pistoni	STD
WI3207P2	Pistón / Piston / Pistoni	0.50

MOTORES / ENGINES / MOTORI
F75 (2003-04)
F90 (2003-04)

Ref.			
WI3208PS	Pistón / Piston / Pistoni	STD
WI3208P2	Pistón / Piston / Pistoni	0.50

MOTORES / ENGINES / MOTORI
F75 (2005-08)
F80 (1999-03)
F90 (2005-08)
F100 (1999-03)

Ref.			
WI3205PS	Pistón / Piston / Pistoni	STD
WI3205P1	Pistón / Piston / Pistoni	0.50

MOTORES / ENGINES / MOTORI
F115 (2000-08)

Ref.			
WI3204PS	Pistón / Piston / Pistoni	STD
WI3204P1	Pistón / Piston / Pistoni	0.50

MOTORES / ENGINES / MOTORI
F150 (2004-08)

Ref.			
WI3206PS	Pistón / Piston / Pistoni	STD
WI3206P1	Pistón / Piston / Pistoni	0.50

MOTORES / ENGINES / MOTORI
F200 (2002-07)
F225 (2005-07)

MOTORES 2 TIEMPOS
2 STROKES ENGINES
MOTORI 2 TEMPI

Ref.	R.O.		
REC6E0-11631-00-98K	6E0-11631-00-98	Kit Pistón/ Piston kit/ Kit Pistoni	STD
REC6G1-11633-00	6G1-11633-00	Bulón / Pin / Bullone	
REC6G1-11610-00	6G1-11610-00	Aros / Rings / Fasce	STD
REC93310-112V0	93310-112V0	Rodamientos / Bearing / cuscinetto	
REC93450-13022	93450-13022	Clip	

MOTORES / ENGINES / MOTORI
4AC (1985-02)
4AS (1987-96)
5C (1994-98)
5CS (1994-96)

Ref.	R.O.		
	677-11631-00-97	Kit Pistón/ Piston kit/ Kit Pistoni	STD
REC677-11635-00K		Kit Pistón/ Piston kit/ Kit Pistoni	0.25
REC677-11636-00K		Kit Pistón/ Piston kit/ Kit Pistoni	0.50
REC6G1-11633-00	6G1-11633-00	Bulón / Pin / Bullone	
REC647-11610-00	647-11610-00	Aros / Rings / Fasce	STD
REC93602-14118	93602-14118	Rodamientos / Bearing / Cuscinetto	
REC93450-13022	93450-13022	Clip	

MOTORES / ENGINES / MOTORI
E8D (1997-99)
E8DMH (1998-03)

Ref.	R.O.		
REC6E7-11631-00K	6E7-11631-00	Kit Pistón/ Piston kit/ Kit Pistoni	STD
REC6E7-11635-00K		Kit Pistón/ Piston kit/ Kit Pistoni	0.25
REC6E7-11636-00K		Kit Pistón/ Piston kit/ Kit Pistoni	0.50
REC634-11633-00	634-11633-00	Bulón / Pin / Bullone	
REC682-11610-01	682-11610-00	Aros / Rings / Fasce	STD
REC682-11610-11		Aros / Rings / Fasce	0.25
REC682-11610-21		Aros / Rings / Fasce	0.50
REC93602-14104	93602-14104	Rodamientos / Bearing / Cuscinetto	
REC93450-15023	93450-15023	Clip	

MOTORES / ENGINES / MOTORI
9.9D/15D (1985-95)
9.9F/FMH/MSH (1995-14)
15F/FEM/MSH/FMH/MH (1995-14)

Ref.	R.O.		
REC6H3-11631-01K	6H3-11631-01-96	Kit Pistón/ Piston kit/ Kit Pistoni	STD
REC6H3-11635-01K		Kit Pistón/ Piston kit/ Kit Pistoni	0.25
REC6H3-11636-01K		Kit Pistón/ Piston kit/ Kit Pistoni	0.50
REC6H3-11633-00	6H3-11633-00	Bulón / Pin / Bullone	
REC6K5-11601-02	6K5-11601-02	Aros / Rings / Fasce	STD
REC6K5-11601-12		Aros / Rings / Fasce	0.25
REC6K5-11601-22		Aros / Rings / Fasce	0.50
REC93603-18M09	93603-18M09	Rodamientos / Bearing / Cuscinetto	
REC688-11634-10	688-11634-10	Clip	

MOTORES / ENGINES / MOTORI
25B/BETO (1994-95)
50G/GEO/GETO (1993- 07)
60F/FEO/FEDO/FETO/FEH/TR/TLR (1990-07)
70BEH/BEO/B/BEM/BETO/BEDO/TR (1990-13)

Ref.	R.O.		
REC61N-11631-00K	61N-11631-00-95	Kit Pistón/ Piston kit/ Kit Pistoni	STD
REC61N-11635-00K		Kit Pistón/ Piston kit/ Kit Pistoni	0.25
REC61N-11636-00K		Kit Pistón/ Piston kit/ Kit Pistoni	0.50
REC689-11633-00	689-11633-00	Bulón / Pin / Bullone	
REC61N-11603-00	61N-11603-00	Aros / Rings / Fasce	STD
REC61N-11604-00		Aros / Rings / Fasce	0.25
REC61N-11605-00		Aros / Rings / Fasce	0.50
REC93602-20M02	93602-20M02	Rodamientos / Bearing / Cuscinetto	
REC688-11634-00	688-11634-00	Clip	

MOTORES / ENGINES / MOTORI
25VE/VM (1996-01)
25B/BMH (2001-10)
30G/GE (1996-00)
E30HMH(2003)
E30HMH/HW (2003-12)

Ref.	R.O.		
REC6J8-11631-02K	6J8-11631-02-97	Kit Pistón/ Piston kit/ Kit Pistoni	STD

MOTORES / ENGINES / MOTORI
25J/JEO/JETO/ESH (1990-99)
30DETO/DEO/DE/DMH/D/ELH/DWH (1990-12)

Ref.	R.O.		
REC6H4-11631-01K	6H4-11631-01-95	Kit Pistón/ Piston kit/ Kit Pistoni	STD
REC6H4-11635-01K		Kit Pistón/ Piston kit/ Kit Pistoni	0.25
REC6H4-11636-01K		Kit Pistón/ Piston kit/ Kit Pistoni	0.50
REC648-11633-00	648-11633-00	Bulón / Pin / Bullone	
REC63D-11603-00	63D-11603-00	Aros / Rings / Fasce	STD
REC63D-11604-00	63D-11604-00	Aros / Rings / Fasce	0.25
REC63D-11605-00	63D-11605-00	Aros / Rings / Fasce	0.50
REC93602-20M02	93602-20M02	Rodamientos / Bearing / Cuscinetto	
REC6H4-11634-01	6H4-11634-01	Clip	

MOTORES / ENGINES / MOTORI
25Q/QEO (1990-94)
40V/VMH/VETO/VMH/MLH/VMHO/VE/VEO/TLR/VETO/YETO/H/HE (1995-13)
C40T/TLR (1995-02)
50H/HRD/HMHD/HETO/HEDO/HWM/D/DE/DEMTO (1989-03)

Ref.	R.O.		
REC6H4-11601-00	6H4-11601-00	Aros / Rings / Fasce	STD
REC6H4-11601-10	6H4-11601-10	Aros / Rings / Fasce	0.25
REC6H4-11601-20	6H4-11601-10	Aros / Rings / Fasce	0.50

MOTORES / ENGINES / MOTORI
25Q/QEO
40H/HE/HEO
50D/DE/DEMTO

Ref.	R.O.		
REC689-11631-00K	689-11631-00-95	Kit Pistón/ Piston kit/ Kit Pistoni	STD
REC689-11633-00	689-11633-00	Bulón / Pin / Bullone	
REC689-11610-00	689-11610-01	Aros / Rings / Fasce	STD
REC93602-20M02	93602-20M02	Rodamientos / Bearing / Cuscinetto	
REC633-11634-00	633-11634-00	Clip	

MOTORES / ENGINES / MOTORI
30A (1985-1992)

Ref.	R.O.		
REC6F6-11631-00K	6F6-11631-00-95	Kit Pistón/ Piston kit/ Kit Pistoni	STD
REC6F6-11635-00K		Kit Pistón/ Piston kit/ Kit Pistoni	0.25
REC6F6-11636-00K		Kit Pistón/ Piston kit/ Kit Pistoni	0.50
REC6F5-11633-00	6F5-11633-00	Bulón / Pin / Bullone	
REC6F5-11610-00	6F5-11610-00	Aros / Rings / Fasce	STD
REC6F5-11610-10		Aros / Rings / Fasce	0.25
REC6F5-11610-20		Aros / Rings / Fasce	0.50
REC93603-21111	93603-21111	Rodamientos / Bearing / Cuscinetto	
REC663-11634-00	663-11634-00	Clip	

MOTORES / ENGINES / MOTORI
E40GMH/JMH/JWH (200
40GWH/JWH (2003)

Ref.	R.O.		
REC66T-11631-01K	66T-11631-01-97	Kit Pistón/ Piston kit/ Kit Pistoni	STD
REC66T-11635-01K		Kit Pistón/ Piston kit/ Kit Pistoni	0.25
REC66T-11636-01K		Kit Pistón/ Piston kit/ Kit Pistoni	0.50
REC6F5-11633-00	6F5-11633-00	Bulón / Pin / Bullone	
REC66T-11603-00	66T-11603-00	Aros / Rings / Fasce	STD
REC66T-11604-00		Aros / Rings / Fasce	0.25
REC66T-11605-00		Aros / Rings / Fasce	0.50
REC93603-21111	93603-21111	Rodamientos / Bearing / Cuscinetto	
REC663-11634-00	663-11634-00	Clip	

MOTORES / ENGINES / MOTORI

E40X/XMH/XW (2002-13)
40XMH/XW (2003-13)

Ref.	R.O.		
REC6H4-11631-00K	6H4-11631-00-96	Kit Pistón/ Piston kit/ Kit Pistoni	STD
REC6H4-11635-00K		Kit Pistón/ Piston kit/ Kit Pistoni	0.25
REC6H4-11636-00K		Kit Pistón/ Piston kit/ Kit Pistoni	0.50
REC648-11633-00	648-11633-00	Bulón / Pin / Bullone	
REC6H4-11610-00-00	6H4-11610-00	Aros / Rings / Fasce	STD
REC6H4-11635-01		Aros / Rings / Fasce	0.25
REC6H4-11636-01		Aros / Rings / Fasce	0.50
REC93602-20M02	93602-20M02	Rodamientos / Bearing / Cuscinetto	
REC6H4-11634-01	6H4-11634-01	Clip	

MOTORES / ENGINES / MOTORI

40N/E/H (1984-1988)
50D/ETN (1984-1988)

Ref.	R.O.		
REC6H1-11631-03K	6H1-11631-03-95	Kit Pistón/ Piston kit/ Kit Pistoni	STD
REC663-11633-00	663-11633-00	Bulón / Pin / Bullone	
REC688-11603-A0	688-11603-A0	Aros / Rings / Fasce	STD
REC688-11604-A0		Aros / Rings / Fasce	0.25
REC688-11605-A0		Aros / Rings / Fasce	0.50
REC93603-21111	93603-21111	Rodamientos / Bearing / Cuscinetto	

MOTORES / ENGINES / MOTORI

55B (1996)
75 TLRB (2003)
75CETO (2004-13)
75AE/T/M/HD (1995-98)
E75B (2000-02)
75AED (2003-07)
75TLR (2000-02)
80A/AETO/AEMTO (1994-02)
85A/AE (1995-02)
90A/AEO/AEMO/AETO/AET/TLR/AETO (1994-13)

Ref.	R.O.		
REC688-11631-02K	688-11631-02-95	Kit Pistón/ Piston kit/ Kit Pistoni	STD
REC663-11633-00	663-11633-00	Bulón / Pin / Bullone	
REC688-11610-02	688-11610-02	Aros / Rings / Fasce	STD
REC93603-21111	93603-21111	Rodamientos / Bearing / Cuscinetto	
REC688-11634-00	688-11634-00	Clip	

MOTORES / ENGINES / MOTORI

55BET (1990)
55BE (1992)

Ref.	R.O.		
REC688-11631-03K	688-11631-03-94	Kit Pistón/ Piston kit/ Kit Pistoni	STD
REC688-11635-03K		Kit Pistón/ Piston kit/ Kit Pistoni	0.25
REC688-11636-03K		Kit Pistón/ Piston kit/ Kit Pistoni	0.50
REC663-11633-00	663-11633-00	Bulón / Pin / Bullone	
REC688-11603-A0	688-11603-A0	Aros / Rings / Fasce	STD
REC688-11604-A0		Aros / Rings / Fasce	0.25
REC688-11605-A0		Aros / Rings / Fasce	0.50
REC93603-21111	93603-21111	Rodamientos / Bearing / Cuscinetto	
REC688-11634-00	688-11634-00	Clip	

MOTORES / ENGINES / MOTORI

E48CMHS (2003)
55B/BM/BET (1993-02)
E55CMH (2003-05)
E75B (2000)
85A/AET/AED (2000-03)

Ref.	R.O.		
REC6K5-11631-03K	6K5-11631-03-95	Kit Pistón/ Piston kit/ Kit Pistoni	STD
REC6K5-11635-03K		Kit Pistón/ Piston kit/ Kit Pistoni	0.25
REC6K5-11636-03K		Kit Pistón/ Piston kit/ Kit Pistoni	0.50
REC6H3-11633-00	6H3-11633-00	Bulón / Pin / Bullone	
REC6K5-11601-02	6K5-11601-02	Aros / Rings / Fasce	STD
REC6K5-11601-12		Aros / Rings / Fasce	0.25
REC6K5-11601-22		Aros / Rings / Fasce	0.50
REC93603-18M09	93603-18M09	Rodamientos / Bearing / Cuscinetto	

MOTORES / ENGINES / MOTORI

E60HE/HM/H/MHZ/MLHA/ELHB/HMHD -S-L (1997-13)

Ref.	R.O.		
REC688-11631-81K	688-11631-81-96	Kit Pistón/ Piston kit/ Kit Pistoni	STD
REC688-11610-02	688-11610-02	Aros / Rings / Fasce	STD
REC93603-21111	93603-21111	Rodamientos / Bearing / Cuscinetto	

MOTORES / ENGINES / MOTORI

75A/AE (1990-93)
85A/AE (1990-93)

Ref.	R.O.		
REC6R5-11631-11K	6R5-11631-11-93	Kit Pistón/ Piston kit/ Kit Pistoni	(STB)STD
WI314654		Kit Pistón/ Piston kit/ Kit Pistoni	0.40
REC6R5-11642-11K	6R5-11642-11-93	Kit Pistón/ Piston kit/ Kit Pistoni	(PORT)STD
WI3146P4		Kit Pistón/ Piston kit/ Kit Pistoni	0.40
REC6R5-11633-00	6R5-11633-10	Bulón / Pin / Bullone	
REC6R5-11603-00	6R5-11603-00	Aros / Rings / Fasce	STD
REC93310-32337	93310-32337	Rodamientos / Bearing / Cuscinetto	
REC6R5-11634-00	6R5-11634-10	Clip	

MOTORES / ENGINES / MOTORI

100A/AETO (1996-01)
115B (2000-02)
115CEO/CETO/TLR/TXRZ (1993-13)
130BETO/TLR (1993-07)
150 CETO/L150CETO (1993-95)
175BETO (1993-95)
200CETO (1993)
200BETO (1993-95)
225BET/BETO (1993-95)

Ref.	R.O.		
REC6R5-11631-01K	6R5-11631-11-93	Kit Pistón/ Piston kit/ Kit Pistoni	(STB)STD
REC6R5-11642-01K	6R5-11642-11-93	Kit Pistón/ Piston kit/ Kit Pistoni	(PORT)STD
REC6K7-11633-00	6K7-11633-00	Bulón / Pin / Bullone	
REC64D-11603-01	64D-11603-02	Aros / Rings / Fasce	STD
REC64D-11604-01	64D-11603-04	Aros / Rings / Fasce	0.25
REC64D-11605-01	64D-11603-05	Aros / Rings / Fasce	0.50
REC93310-32337	93603-21111	Rodamientos / Bearing / Cuscinetto	
REC6R5-11634-00	6R5-11634-00	Clip	

MOTORES / ENGINES / MOTORI

115BE/CEO (1992)
E115AEL (2003)
130BETO (1992)
150CETO (1992)
175BETO (1992)
200BETO (1992)

Ref.	R.O.		
REC6G5-11631-00K	6G5-11631-00-93	Kit Pistón/ Piston kit/ Kit Pistoni	(STB)STD
WI314654		Kit Pistón/ Piston kit/ Kit Pistoni	0.40
REC6G5-11642-00K	6G5-11642-00-93	Kit Pistón/ Piston kit/ Kit Pistoni	(PORT)STD
WI3116P4		Kit Pistón/ Piston kit/ Kit Pistoni	0.40
REC6E5-11633-00	6E5-11633-01	Bulón / Pin / Bullone	
REC6E5-11610-02	6E5-11610-02	Aros / Rings / Fasce	STD
REC93603-21111	93603-21111	Rodamientos / Bearing / Cuscinetto	
REC6E5-11634-00	6E5-11634-00	Clip	

MOTORES / ENGINES / MOTORI

115ETN (1984)
115A (1985-87)
140AETO (1984-87)
150ETN (1984)
150AETO (1985-87)
175AETO (1984-87)
200ETN (1984)
200AETO (1985-87)

Ref.	R.O.		
REC64D-11631-00K	64D-11631-02-90	Kit Pistón/ Piston kit/ Kit Pistoni	(STB)STD
REC64D-11642-00K	64D-11642-02-90	Kit Pistón/ Piston kit/ Kit Pistoni	(PORT)STD
REC6R5-11633-00	6R5-11633-10	Bulón / Pin / Bullone	
REC64D-11603-02	64D-11603-02	Aros / Rings / Fasce	STD
REC93310-32337	93310-32337	Rodamientos / Bearing / C]uscinetto	
REC6R5-11634-00	6R5-11634-10	Clip	

MOTORES / ENGINES / MOTORI

150F/FETO (1996-2007)
150TXR/TR (2002-05)
150AET (2001-02)
175D/DETO (1996-03)
200AET (2003)
200F/TLR/FETO (1996-10)
200G/GETOL (1996-02)
L200F/FETO (1996-00)
225D/DET (1996-09)

GUÍA DE PISTONES Y SEGMENTOS
PISTONS & RINGS GUIDE
GUIDA PISTONI E FASCE

MODELO MODEL MODELLO	AÑO INICIO YEAR FROM DALL'ANNO	AÑO FIN YEAR TO ALL'ANNO	SEGMENTOS RING FASCE	PISTÓN PISTON PISTONE
2B	1985	1999		
2BMHS/MSHA	2002	2003		
4A	1985	1987	**REC6G1-11610-00**	**REC6E0-11631-00-98K**
4AC	1987	1999	**REC6G1-11610-00**	**REC6E0-11631-00-98K**
4ACMHL/HS	2001	2003	**REC6G1-11610-00**	**REC6E0-11631-00-98K**
4AS	1987	1996	**REC6G1-11610-00**	**REC6E0-11631-00-98K**
4BC	1998	1998	**REC6G1-11610-00**	**REC6E0-11631-00-98K**
4BCMHL/HS	2001	2003	**REC6G1-11610-00**	**REC6E0-11631-00-98K**
5C	1994	1998	**REC6G1-11610-00**	**REC6E0-11631-00-98K**
5CMHL/HS	2001	2003	**REC6G1-11610-00**	**REC6E0-11631-00-98K**
5CS	1994	1996	**REC6G1-11610-00**	**REC6E0-11631-00-98K**
6C	1984	1996	**REC6G1-11610-00**	
6CMHL/HS	2002	2002	**REC6G1-11610-00**	
6D	1984	1996	**REC6G1-11610-00**	
6DMHL/HS	2002	2002	**REC6G1-11610-00**	
8C	1984	1996	**REC6G1-11610-00**	
8CMHL/HS	2002	2002	**REC6G1-11610-00**	
8CMHX	2002	2002	**REC6G1-11610-00**	
8CWHL	2002	2002	**REC6G1-11610-00**	
8CWHS	2002	2002	**REC6G1-11610-00**	
E8D	1997	1998	**REC647-11610-00**	**REC677-11631-00K**
E8DMH	1999	1999	**REC689-11610-00**	**REC677-11631-00K**
9.9D	1985	1995	**REC682-11610-00**	**REC6E7-11631-00K**
9.9FEMHW	1995	2013	**REC682-11610-00**	**REC6E7-11631-00K**
13.5/15FEMHW LBC	1995	2013	**REC682-11610-00**	**REC6E7-11631-00K**
15D	1985	1995	**REC682-11610-00**	**REC6E7-11631-00K**

MODELO MODEL MODELLO	AÑO INICIO YEAR FROM DALL'ANNO	AÑO FIN YEAR TO ALL'ANNO	SEGMENTOS RING FASCE	PISTÓN PISTON PISTONE
25B/BETO	1994	1995	REC6K5-11601-02	REC6H3-11631-01K
25BMHL/HS	2001	2010	REC61N-11603-00	REC61N-11631-00K
25J	1990	2000	REC6J8-11601-01	REC6J8-11631-02K
25Q	1990	1994	REC6H4-11601-00	REC6H4-11631-01K
25VE/VM	1996	2001	REC61N-11603-00	REC61N-11631-00K
25BMHL/HM	2001	2012	REC61N-11603-00	REC61N-11631-00K
25BMHS/WC	2001	2012	REC61N-11603-00	REC61N-11631-00K
C25 MHV2	1997	1998	REC61N-11603-00	REC61N-11631-00K
30A	1984	1985	REC689-11610-00	REC689-11631-00K
30AM	1990	1992	REC689-11610-00	REC689-11631-00K
30D	1990	2002	REC6J8-11601-01	REC6J8-11631-02K
30DEOL -EL	2001	2010	REC6J8-11601-01	REC6J8-11631-02K
30DEOS	2001	2010	REC6J8-11601-01	REC6J8-11631-02K
30DEOT -DETOL	2001	2010	REC6J8-11601-01	REC6J8-11631-02K
30DMHOL	2001	2014	REC6J8-11601-01	REC6J8-11631-02K
30DMHOS	2001	2010	REC6J8-11601-01	REC6J8-11631-02K
E30HMH	2003	2003	REC61N-11603-00	REC61N-11631-00K
30G/GE	1996	1997	REC61N-11603-00	REC61N-11631-00K
30 HM/WH	2003	2003	REC61N-11603-00	REC61N-11631-00K
30 HM/W	2010	2012	REC61N-11603-00	REC61N-11631-00K
C30	1993	1997	REC61N-11603-00	REC61N-11631-00K
40H	1984	1988	REC6H4-11610-00	REC6H4-11631-00K
40H	1989	1994	REC6H4-11601-00	REC6H4-11631-01K
40RMHO	2000	2000	REC6H4-11610-00	REC6H4-11631-01K
40RROS	2001	2001	REC6H4-11610-00	REC6H4-11631-01K
40V	1995	1998	REC6H4-11610-00	REC6H4-11631-01K
40VEO	2000	2000	REC6H4-11610-00	REC6H4-11631-01K
40VEOL/OS	2001	2006	REC6H4-11610-00	REC6H4-11631-01K
40VETO	2000	2000	REC6H4-11610-00	REC6H4-11631-01K
40VETOL	2001	2006	REC6H4-11610-00	REC6H4-11631-01K
40VETOS	2001	2003	REC6H4-11610-00	REC6H4-11631-01K
40VMHOL/OS	2001	2006	REC6H4-11610-00	REC6H4-11631-01K
40VMO	2000	2000	REC6H4-11610-00	REC6H4-11631-01K
40VMOS	2002	2002	REC6H4-11610-00	REC6H4-11631-01K
40X	1998	1998	REC66T-11603-00	REC66T-11631-01K
40XMH	2000	2000	REC66T-11603-00	REC66T-11631-01K
40XMHL	2001	2006	REC66T-11603-00	REC66T-11631-01K
40XMHS	2001	2002	REC66T-11603-00	REC66T-11631-01K
40XW	2000	2000	REC66T-11603-00	REC66T-11631-01K
40XWL/WS	2001	2001	REC66T-11603-00	REC66T-11631-01K
40XWT	2000	2000	REC66T-11603-00	REC66T-11631-01K
40XWTL	2001	2003	REC66T-11603-00	REC66T-11631-01K
40YETOL/YMHOS	2001	2004	REC6H4-11610-00	REC6H4-11631-01K
50D	1984	1989	REC6H4-11610-00	REC6H4-11631-00K
50D	1989	1994	REC6H4-11601-00	REC6H4-11631-01K
50G/EO	1993	2000	REC6K5-11601-02	REC6H3-11631-01K
50GETO	2000	2000	REC6K5-11601-02	REC6H3-11631-01K
50GETOL	2001	2007	REC6K5-11601-02	REC6H3-11631-01K
50H	1995	1998	REC6H4-11610-00	REC6H4-11631-01K
50HEDO	2000	2000	REC6H4-11610-00	REC6H4-11631-01K
50HEDOL/OS	2001	2002	REC6H4-11610-00	REC6H4-11631-01K
50HMDO	2000	2000	REC6H4-11610-00	REC6H4-11631-01K
55B	1993	2002	REC688-11603-A0	REC6H1-11631-03K
55BE	1990	1992	REC688-11610-02	REC688-11631-02K
55BE	2000	2000	REC688-11603-A0	REC688-11631-03K
55BEHD/BET	2000	2000	REC688-11603-A0	REC688-11631-03K
55BETL	2001	2002	REC688-11603-A0	REC688-11631-03K
60F	1990	2002	REC6K5-11601-02	REC6H3-11631-01K
60FEO	1991	2000	REC6K5-11601-02	REC6H3-11631-01K
60FETO	2000	2006	REC6K5-11601-02	REC6H3-11631-01K
60FETOL	2001	2007	REC6K5-11601-02	REC6H3-11631-01K
E60/HM/HDL	2001	2006	REC6K5-11601-02	REC6K5-11631-03K
70B	1990	2002	REC6K5-11601-02	REC6H3-11631-01K
70BEDOL	2001	2003	REC6K5-11601-02	REC6H3-11631-01K

MODELO MODEL MODELLO	AÑO INICIO YEAR FROM DALL'ANNO	AÑO FIN YEAR TO ALL'ANNO	SEGMENTOS RING FASCE	PISTÓN PISTON PISTONE
70BEO	1991	2000	REC6K5-11601-02	REC6H3-11631-01K
70BETO	1998	2013	REC6K5-11601-02	REC6H3-11631-01K
70BETOL	2001	2013	REC6K5-11601-02	REC6H3-11631-01K
75A	1993	1994	REC688-11610-02	REC688-11631-81K
75AET	2000	2000	REC688-11603-A0	REC6H1-11631-03K
75AETL	2001	2006	REC688-11603-A0	REC6H1-11631-03K
75AMHD	2000	2000	REC688-11603-A0	REC6H1-11631-03K
75C	1998	1998	REC688-11603-A0	REC6H1-11631-03K
75CETO	2000	2000	REC688-11603-A0	REC6H1-11631-03K
75CETOL	2001	2006	REC688-11603-A0	REC6H1-11631-03K
80A	1994	1996	REC688-11603-A0	REC6H1-11631-03K
85A	1990	1994	REC688-11610-02	REC688-11631-81K
85A	1995	1998	REC688-11603-A0	REC6H1-11631-03K
85AE	1990	1992	REC688-11610-02	REC688-11631-81K
85AE/AET	2000	2000	REC688-11603-A0	REC6H1-11631-03K
85AETL	2001	2002	REC688-11603-A0	REC6H1-11631-03K
90A	1994	1998	REC688-11603-A0	REC6H1-11631-03K
90AETO	2000	2000	REC688-11603-A0	REC6H1-11631-03K
90AETOL	2001	2006	REC688-11603-A0	REC6H1-11631-03K
100A	1997	1998	REC64D-11603-01	REC6R5-11631-11K (STB) / REC6R5-11642-11K (PORT)
100AETO	2000	2000	REC64D-11603-01	REC6R5-11631-11K (STB) / REC6R5-11642-11K (PORT)
100AETOL	2001	2001	REC64D-11603-01	REC6R5-11631-11K (STB) / REC6R5-11642-11K (PORT)
115A	1984	1987	REC6E5-11610-02	REC6G5-11631-00K (STB) / REC6G5-11642-00K (PORT)
115B	1992	1992	REC61V-11601-00	REC6R5-11631-01K (STB) / REC6R5-11642-01K (PORT)
115B	1993	1996	REC6R5-11603-00	REC6R5-11631-11K (STB) / REC6R5-11642-11K (PORT)
115BETO	1997	2000	REC64D-11603-01	REC6R5-11631-11K (STB) / REC6R5-11642-11K (PORT)
115BETOL	2001	2002	REC64D-11603-01	REC6R5-11631-11K (STB) / REC6R5-11642-11K (PORT)
115C	1992	1992	REC64D-11603-01	REC6R5-11631-11K (STB) / REC6R5-11642-11K (PORT)
115C	1993	1996	REC6R5-11603-00	REC6R5-11631-11K (STB) / REC6R5-11642-11K (PORT)
115C	1997	1998	REC64D-11603-01	REC6R5-11631-11K (STB) / REC6R5-11642-11K (PORT)
115CETO	2000	2000	REC64D-11603-01	REC6R5-11631-11K (STB) / REC6R5-11642-11K (PORT)
115CETOL	2001	2006	REC64D-11603-01	REC6R5-11631-11K (STB) / REC6R5-11642-11K (PORT)
115CETOX	2001	2001	REC64D-11603-01	REC6R5-11631-11K (STB) / REC6R5-11642-11K (PORT)
E115AWEL	2003	2006	REC64D-11603-01	REC6R5-11631-01K (STB) / REC6R5-11642-01K (PORT)
130B	1992	1922	REC64D-11603-01	REC6R5-11631-11K (STB) / REC6R5-11642-11K (PORT)
130B	1993	1996	REC6R5-11603-00	REC6R5-11631-11K (STB) / REC6R5-11642-11K (PORT)
130B	1997	1998	REC64D-11603-01	REC6R5-11631-11K (STB) / REC6R5-11642-11K (PORT)
130BETO	2000	2000	REC64D-11603-01	REC6R5-11631-11K (STB) / REC6R5-11642-11K (PORT)
130BETOL	2001	2006	REC64D-11603-01	REC6R5-11631-11K (STB) / REC6R5-11642-11K (PORT)
130BETOX	2001	2001	REC64D-11603-01	REC6R5-11631-11K (STB) / REC6R5-11642-11K (PORT)
L130B	1992	1992	REC61V-11601-00	REC6R5-11631-01K (STB) / REC6R5-11642-01K (PORT)
L130B	1993	1993	REC6R5-11603-00	REC6R5-11631-11K (STB) / REC6R5-11642-11K (PORT)
L130B	1997	1998	REC64D-11603-01	REC6R5-11631-11K (STB) / REC6R5-11642-11K (PORT)
L130BETOX	2000	2001	REC64D-11603-01	REC6R5-11631-11K (STB) / REC6R5-11642-11K (PORT)
140A	1985	1987	REC6E5-11610-02	REC6G5-11631-00K (STB) / REC6G5-11642-00K (PORT)
150A	1984	1987	REC6E5-11610-02	REC6G5-11631-00K (STB) / REC6G5-11642-00K (PORT)
150AET	1998	2000	REC64D-11603-01	REC64D-11631-00K
150AETL/AETX	2001	2002	REC64D-11603-01	REC64D-11642-00K
150C	1992	1992	REC61V-11601-00	REC6R5-11631-01K (STB) / REC6R5-11642-01K (PORT)
150C	1993	1995	REC6R5-11603-00	REC6R5-11631-11K (STB) / REC6R5-11642-11K (POR)
150F	1996	2001	REC64D-11603-01	REC6G5-11631-00K (STB) / REC6G5-11642-00K (STB)
150FETO	1998	2000	REC64D-11603-01	REC64D-11631-00K (STB) / REC64D-11642-00K (PORT)
150FETOL	2001	2004	REC64D-11603-01	REC64D-11631-00K (STB) / REC64D-11642-00K (PORT)
150FETOX	2001	2005	REC64D-11603-01	REC64D-11631-00K (STB) / REC64D-11642-00K (PORT)
D150H	1999	2002	REC64D-11603-01	REC64D-11631-00K (STB) / REC64D-11642-00K (PORT)
L150C	1992	1992	REC61V-11601-00	REC6R5-11631-01K (STB) / REC6R5-11642-01K (PORT)
L 150C	1993	1995	REC6R5-11603-00	REC6R5-11631-11K (STB) / REC6R5-11642-11K (PORT)
L150F	1996	1998	REC64D-11603-01	REC6G5-11631-00K (STB) / REC6G5-11642-00K (PORT)
L150FETO	2000	2000	REC64D-11603-01	REC64D-11631-00K (STB) / REC64D-11642-00K (PORT)
L150FETOL/FETOX	2001	2001	REC64D-11603-01	REC64D-11642-00K (STB) / REC64D-11642-00K (PORT)
175A	1984	1987	REC6E5-11610-02	REC6G5-11631-00K (STB) / REC6G5-11642-00K (PORT)
175B	1992	1992	REC61V-11601-00	REC6R5-11631-01K (STB) / REC6R5-11642-01K (PORT)
175BETO/CETO	1993	1995	REC6R5-11603-00	REC6R5-11631-11K (STB) / REC6R5-11642-11K (PORT)
175D	1996	1998	REC64D-11603-01	REC6G5-11631-00K (STB) / REC6G5-11642-00K (PORT)

MODELO MODEL MODELLO	AÑO INICIO YEAR FROM DALL'ANNO	AÑO FIN YEAR TO ALL'ANNO	SEGMENTOS RING FASCE	PISTÓN PISTON PISTONE
175DETO	1996	2000	REC64D-11603-01	REC64D-11631-00K
175DETOL	2001	2003	REC64D-11603-01	REC64D-11642-00K
175DETOX	2001	2002	REC64D-11603-01	REC64D-11642-00K
200A	1984	1987	REC6E5-11610-02	REC6G5-11631-00K (STB) / REC6G5-11642-00K (PORT)
200B	1992	1992	REC64D-11603-01	REC6R5-11631-01K (STB) / REC6R5-11642-01K (PORT)
200B	1993	1995	REC6R5-11603-00	REC6R5-11631-11K (STB) / REC6R5-11642-11K (PORT)
200F	1996	1998	REC64D-11603-01	REC6G5-11631-00K (STB) / REC6G5-11642-00K (PORT)
200FETO	2000	2000	REC64D-11603-01	REC64D-11631-00K (STB) / REC64D-11642-00K (PORT)
200FETOL/F	2001	2004	REC64D-11603-01	REC64D-11631-00K (STB) / REC64D-11642-00K (PORT)
200G	1999	1999	REC64D-11603-01	REC64D-11631-00K (STB) / REC64D-11642-00K (PORT)
200GETO	2000	2000	REC64D-11603-01	REC64D-11631-00K (STB) / REC64D-11642-00K (PORT)
200GETOL	2001	2003	REC64D-11603-01	REC64D-11631-00K (STB) / REC64D-11642-00K (PORT)
L200B	1992	1992	REC6R5-11603-00	REC6R5-11631-01K (STB) / REC6R5-11642-01K (PORT)
L 200B	1993	1995	REC6R5-11603-00	REC6R5-11631-11K (STB) / REC6R5-11642-11K (PORT)
L200F	1996	2001	REC64D-11603-01	REC6G5-11631-00K (STB) / REC6G5-11642-00K (PORT)
L200FETO	1996	2000	REC64D-11603-01	REC64D-11631-00K (STB) / REC64D-11642-00K (PORT)
200FETOL	2001	2004	REC64D-11603-01	REC64D-11631-00K (STB) / REC64D-11642-00K (PORT)
220A, ET, O	1985	1987	REC6E5-11610-02	
225B	1993	1995	REC6R5-11603-00	REC6R5-11631-11K (STB) / REC6R5-11642-11K (PORT)
225D	1996	2001	REC64D-11603-01	REC6G5-11631-00K (STB) / REC6G5-11642-00K (PORT)
225DETO	1996	2000	REC64D-11603-01	REC64D-11631-00K (STB) / REC64D-11642-00K (PORT)
225G	1999	1999	REC64D-11603-01	REC64D-11631-00K (STB) / REC64D-11642-00K (PORT)
225GETO	1999	2000	REC64D-11603-01	REC64D-11631-00K (STB) / REC64D-11642-00K (PORT)
225GETOL	2001	2003	REC64D-11603-01	REC64D-11631-00K (STB) / REC64D-11642-00K (PORT)
L225C	1994	1995	REC6R5-11603-00	REC69L-11631-00K (STB) / REC69L-11642-00K (PORT)
250A	1993	1995	REC6R5-11603-00	REC69L-11631-00K (STB) / REC69L-11642-00K (PORT)
250AETO	2000	2000	REC64D-11603-01	REC69L-11631-00K (STB) / REC69L-11642-00K (PORT)
250AETOX	2001	2004	REC64D-11603-01	REC69L-11631-00K (STB) / REC69L-11642-00K (PORT)
250B	1997	1998	REC64D-11603-01	REC69L-11631-00K (STB) / REC69L-11642-00K (PORT)
250BETO	2000	2000	REC64D-11603-01	REC69L-11631-00K (STB) / REC69L-11642-00K (PORT)
250BETOX	2001	2000	REC64D-11603-01	REC69L-11631-00K (STB) / REC69L-11642-00K (PORT)
L250AETO	2000	2005	REC64D-11603-01	REC69L-11631-00K (STB) / REC69L-11642-00K (PORT)
L250AETOX	2001	2006	REC64D-11603-01	REC69L-11631-00K (STB) / REC69L-11642-00K (PORT)
L250B	1997	2002	REC64D-11603-01	REC69L-11631-00K (STB) / REC69L-11642-00K (PORT)
L250BETO	2000	2003	REC64D-11603-01	REC69L-11631-00K (STB) / REC69L-11642-00K (PORT)
L250BETOX	2001	2003	REC64D-11603-01	REC69L-11631-00K (STB) / REC69L-11642-00K (PORT)
L250GETOX	2006	2010	REC64D-11603-01	REC69L-11631-00K (STB) / REC69L-11642-00K (PORT)
L250 A	1997	1998	REC64D-11603-01	REC69L-11631-00K (STB) / REC69L-11642-00K (PORT)
Z-LZ300TR AETO-X-V	2004	2004	REC6D0-11603-02	REC6D0-11631-00K (STB) / REC6D0-11642-00K (PORT)

GUÍA DE PISTONES Y SEGMENTOS
PISTONS & RINGS GUIDE
GUIDA PISTONI E FASCE

MODELO MODEL MODELLO	AÑO INICIO YEAR FROM DALL'ANNO	AÑO FIN YEAR TO ALL'ANNO	SEGMENTOS RING FASCE	PISTÓN PISTON PISTONE
F2.5 ALL	2004	2013	REC69M-E1603-01	PAF2.6-04020001
F4 ALL	2002	2009	REC68D-E1603-00	PAF4-04020001
F9.9/F15/F13.5	1998	2008	REC66N-11603-00	PAF15-07020001
FT25/T25	2000	2009	REC67C-11603-00	PAF25-05020101
F30 ALL	2001	2009	REC67C-11603-00	PAF25-05020101
F40 B/E ALL	2000	2009	REC67C-11603-00	PAF25-05020101
F20/F25 ALL	1999	2009	REC67C-11603-00	PAF25-05020101
F75	2003	2004		STD. WI3207PS / 0.50 WI3207P2
F75	2005	2008		STD. WI3208PS / 0.50 WI3208P2
F80	1999	2003		STD. WI3208PS / 0.50 WI3208P2
F90	2003	2004		STD. WI3207PS / 0.50 WI3207P2
F90	2005	2004		STD. WI3208PS / 0.50 WI3208P2
F100	1999	2003		STD. WI3208PS / 0.50 WI3208P2
F150	2004	2008		STD. WI3204PS / 0.25 WI3204P1
F200	2002	2007		STD. WI3206PS / 0.25 WI3206P1
F225	2005	2007		STD. WI3206PS / 0.25 WI3206P1

GUÍA RODAMIENTOS MOTOR
ENGINE BEARING GUIDE
GUIDA CUSCINETTI MOTORE

MODELO MODEL MODELLO	AÑOS YEARS ANNI	SUP. CIGÜEÑAL UP CRANKSHAFT SUP. ALBERO MOTORE	CEN. CIGÜEÑAL CENT. CRANK CEN. ALBERO MOTORE	INF. CIGÜEÑAL LOWER CRANK INF. ALBERO MOTORE	CABEZA PIE UP CON. ROAD GABBIA A RULLI	PIE BIELA LOW CON. ROAD BRONZINE BIELLA
4A	1985-87	REC93306-304U0		REC93306-304U0	REC93310-112V0	REC93310-418V1
4AC	1987-99	REC93306-304U0		REC93306-304U0	REC93310-112V0	REC93310-418V1
4AC	1999	REC93306-304U0		REC9306-304U0	REC93310-112V0	REC93310-418V1
4AC MHL/MHS	2001-03	REC93306-304U0		REC93306-304U0	REC93310-112V0	REC93310-418V1
4AS	1987-96	REC93306-304U0		REC93306-304U0	REC93310-112V0	REC93310-418V1
4BC	1998-99	REC93306-304U0		REC93306-304U0	REC93310-112V0	REC93310-418V1
4BC	1999	REC93306-304U0		REC93306-304U0	REC93310-112V0	REC93310-418V1
4BC MHL/MHS	2001-03	REC93306-304U0		REC9306-304U0	REC93310-112V0	REC93310-418V1
5C	1985-99	REC93306-304U0		REC9306-304U0	REC93310-112V0	REC93310-418V1
5C MHL/MHS	2001-13	REC93306-304U0		REC93306-304U0	REC93310-112V0	REC93310-418V1
5CS	1987-96	REC93306-304U0		REC93306-304U0	REC93310-112V0	REC93310-418V1
6C	1990	REC93306-204U0	REC93306-204U0	REC93306-204U0	REC93310-112V0	REC93310-418V1
6C	1990-02	REC93306-204U0	REC93306-204U0	REC93306-204U0	REC93310-112V0	REC93310-418V1
6C MHL/MHS	2001-06	REC93306-204U0	REC93306-204U0	REC93306-204U0	REC93310-112V0	REC93310-418V1
6C WHL/WHS	2001	REC93306-204U0	REC93306-204U0	REC93306-204U0	REC93310-112V0	REC93310-418V1
6C	1990	REC93306-204U0	REC93306-204U0	REC93306-204U0	REC93310-112V0	REC93310-418V1
6D	1990-98	REC93306-204U0	REC93306-204U0	REC93306-204U0	REC93310-112V0	REC93310-418V1
6D MHL/MHS	2001-06	REC93306-204U0	REC93306-204U0	REC93306-204U0	REC93310-112V0	REC93310-418V1
6D WHS	2001	REC93306-204U0	REC93306-204U0	REC93306-204U0	REC93310-112V0	REC93310-418V1
8C	1987-02	REC93306-204U0	REC93306-204U0	REC93306-204U0	REC93310-112V0	REC93310-418V1
8C MHL/MHS	2001-12	REC93306-204U0	REC93306-204U0	REC93306-204U0	REC93310-112V0	REC93310-418V1
8C MHX/WHL	2001-03	REC93306-204U0	REC93306-204U0	REC93306-204U0	REC93310-112V0	REC93310-418V1
E8D/MH	1996-99	REC93306-204U0	REC93306-204U0	REC93306-204U0	REC93602-14118	REC93310-418U2
9.9D	1985-89	REC93306-205U2	REC93304-205U0	REC93306-304U0	REC93602-14104	REC93310-620V5
9.9D	1985-95	REC93306-205U2	REC93304-205U0	REC93306-304U0	REC93602-14104	REC93310-620V5
9.9D	1990-95	REC93306-205U2	REC93304-205U0	REC93306-304U0	REC93602-14104	
9.9F	1995-99	REC93306-205U7	REC93306-205U7	REC93306-205U7	REC93602-14104	REC93310-620V5
9.9F MH	2000	REC93306-205U7	REC93306-205U7	REC93306-205U7	REC93602-14104	REC93310-620V5
9.9F MHL/MHS	2001-06	REC93306-205U7	REC93306-205U7	REC93306-205U7	REC93602-14104	
9.9F WC/WH	2000	REC93306-205U7	REC93306-205U7	REC93306-205U7	REC93602-14104	REC93310-620V5
9.9F WHL/WHS	2001	REC93306-205U7	REC93306-205U7	REC93306-205U7	REC93602-14104	REC93310-620V5
13.5A	1999	REC93306-205U7	REC93306-205U7	REC93306-205U7	REC93602-14104	REC93310-620V5
13.5A MH	2000	REC93306-205U7	REC93306-205U7	REC93306-205U7	REC93602-14104	REC93310-620V5
13.5A MHL/MHS	2001-04	REC93306-205U7	REC93306-205U7	REC93306-205U7	REC93602-14104	REC93310-620V5
13.5A WH	2000	REC93306-205U7	REC93306-205U7	REC93306-205U7	REC93602-14104	REC93310-620V5
15D	1985-89	REC93306-205U2	REC93304-205U0	REC93306-304U0	REC93602-14104	REC93310-620V5
15D	1985	REC93306-205U2	REC93304-205U0	REC93306-304U0	REC93602-14104	REC93310-620V5
15D	1990-95	REC93306-205U2	REC93304-205U0	REC93306-304U0	REC93602-14104	REC93310-620U5
15F	1995-99	REC93306-205U7	REC93306-205U7	REC93306-205U7	REC93602-14104	REC93310-620V5
15F MH	2000	REC93306-205U7	REC93306-205U7	REC93306-205U7	REC93602-14104	REC93310-620V5
15F MHL/MHS	2001-06	REC93306-205U7	REC93306-205U7	REC93306-205U7	REC93602-14104	REC93310-620V5
15F WC	2000	REC93306-205U7	REC93306-205U7	REC93306-205U7	REC93602-14104	REC93310-620V5
15F WCL/WCS	2001-03	REC93306-205U7	REC93306-205U7	REC93306-205U7	REC93602-14104	REC93310-620V5
20C	1985	REC93306-30510		REC93306-30510	REC93602-20M02	REC93310-522A4
20C	1986-93	REC93306-30510		REC93306-30510	REC93602-20M02	REC93310-522W0
20C	1993	REC93306-305U3		REC93306-305U3	REC93602-20M02	REC93310-522W0
20C M	1990-97	REC93306-305U3		REC93306-305U3	REC93602-20M02	REC93310-522W0
20C MH	1998	REC93306-305U3		REC93306-305U3	REC93602-20M02	REC93310-522W0
20C MHL/MHS	2001-02	REC93306-305U3		REC93306-305U3	REC93602-20M02	REC93310-522W0
20DEM	1994-98	REC93311-632U7	REC93306-305U3	REC93306-305U3		
20D MHOL/MHOS	2001-06	REC93311-632U7	REC93306-305U3	REC93306-305U3		
20D WOL/WOS	2006	REC93311-632U7	REC93306-305U3	REC93306-305U3		REC93303-18M09
25B	1994-95	REC93311-636U6		REC93306-306V1	REC93603-18M09	REC93603-18M09
25B MHL/MHS	2001-06	REC93399-99951		REC93306-305U3	REC93602-20M02	
25B WCS	2001-02	REC93399-99951		REC93306-305U3	REC93602-20M02	
25D	1985	REC93306-30510		REC93306-30510	REC93602-20M02	REC93310-522A4
25D	1986-87	REC93306-30510		REC93306-30510	REC93602-20M02	REC93310-522W0
25D M	1990-97	REC93311-632U7	REC93306-305U3	REC93306-305U3	REC93602-20M02	REC93310-522W0
25D MH	1998	REC93311-632U7	REC93306-305U3	REC93306-305U3		REC93310-522W0
25D MHL/MHS	2001	REC93311-632U7	REC93306-305U3	REC93306-305U3	REC93602-20M02	REC93310-522W0
25J	1987-2000			REC93306-305U3		
25J	1992-2000	REC93311-632U7		REC93306-305U3		
25N	1994-98	REC93311-632U7	REC93306-305U3	REC93306-305U3		
25N MHOL/ MHOS	2001-06	REC93311-632U7	REC93306-305U3	REC93306-305U3		
25N WOL/WOS	2001-03	REC93311-632U7	REC93306-305U3	REC93306-305U3		

MODELO MODEL MODELLO	AÑOS YEARS ANNI	SUP. CIGÜEÑAL UP CRANKSHAFT SUP. ALBERO MOTORE 	CEN. CIGÜEÑAL CENT. CRANK CEN. ALBERO MOTORE 	INF. CIGÜEÑAL LOWER CRANK INF. ALBERO MOTORE 	CABEZA PIE UP CON. ROAD GABBIA A RULLI 	PIE BIELA LOW CON. ROAD BRONZINE BIELLA
25V	1996	REC93331-632U7	REC93306-305U3	REC93306-305U3	REC93602-20M02	
25V	1997-98	REC93311-632V4	REC93306-305U3	REC93306-305U3	REC93602-20M02	REC93310-624U5
25V MHL/MHS	2001	REC93311-632V4	REC93306-305U3	REC93306-305U3	REC93602-20M02	REC93310-624U5
25V WCS	2001	REC93311-632V4	REC93306-305U3	REC93306-305U3	REC93602-20M02	REC93310-624U5
30A	1985			REC93306-30510	REC93602-20M02	REC93310-624U5
30A M	1990-92			REC93306-305U3	REC93602-20M02	REC93310-624U5
30D	1986-99			REC93306-305U3		
30D	1992-00	REC93311-632U7		REC93306-305U3		
30D EOL/ETOL	2001-06	REC93311-632U7		REC93306-305U3		
30D MHOL/MHOS	2001-06	REC93311-632U7		REC93306-305U3		
30D OL	2001-03	REC93311-632U7		REC93306-305U3		
30D EOS	2001-06	REC93311-632U7		REC93306-305U3		
30G	1996	REC93311-632U7		REC93306-305U3	REC93602-20M02	REC93310-624U5
30G	1996-98	REC93311-632V4		REC93306-305U3	REC93602-20M02	REC93310-624U5
30G MHS/WCS	2001	REC93311-632V4		REC93306-305U3	REC93602-20M02	REC93310-624U5
30H MHS	2001-03	REC93311-632V4		REC93306-305U3	REC93602-20M02	REC93310-624U5
30H WCS	2001-02	REC93311-632V4		REC93306-305U3	REC93602-20M02	
40H	1984-87	REC93306-305V8		REC93306-30510	REC93602-20M02	
40Q	1993-98		REC93311-832U4		REC93603-21111	REC93310-730V6
40Q E/M	1992		REC93311-832U4		REC93603-21111	REC93310-730V6
40R MHO	2000				REC93602-20M02	
40R ROS	2001				REC93602-20M02	
40V	1994-99	REC93306-305U8		REC93306-305U8	REC93602-20M02	
40V EO	2000	REC93306-305U8		REC93306-305U8	REC93602-20M02	
40V EOL/EOS	2001-06	REC93306-305U8		REC93306-305U8	REC93602-20M02	
40V ETO	2000	REC93306-305U8		REC93306-305U8	REC93602-20M02	
40V ETOL/ETOS	2001-03	REC93306-305U8		REC93306-305U8	REC93602-20M02	
40V MHOL/MHOS	2001-06	REC93306-305U8		REC93306-305U8	REC93602-20M02	
40V MO	2000	REC93306-305U8		REC93306-305U8	REC93602-20M02	
40V MOS	2002-05	REC93306-305U8		REC93306-305U8	REC93602-20M02	
40X	1998	REC93306-307UO	REC93332-000UE	REC93306-306V5	REC93603-21111	REC93310-727U0
40X MH	2000	REC93306-307UO	REC93332-000UE	REC93306-306V5	REC93603-21111	REC93310-727U0
40X MHL	2001-06	REC93306-307UO	REC93332-000UE	REC93306-306V5	REC93603-21111	REC93310-727U0
40X WL/WS	2001	REC93306-307UO	REC93332-000UE	REC93306-306V5	REC93603-21111	REC93310-727U0
40X WT	2000	REC93306-307UO	REC93332-000UE	REC93306-306V5	REC93603-21111	REC93310-727U0
40X WTL	2001-03	REC93306-307UO	REC93332-000UE	REC93306-306V5	REC93603-21111	REC93310-727U0
40Y ETOL	2001-06	REC93306-305U8		REC93306-305U8	REC93602-20M02	
40Y MHOS	2001-06	REC93306-305U8		REC93306-305U8	REC93602-20M02	
E40G	2003	REC93306-307U0	REC93332-000UE	REC93306-306V1	REC93603-21111	REC93310-727V7
E40J	2003	REC93306-307U0	REC93332-000UE	REC93306-306V1	REC93603-21111	REC93310-727V7
50D	1984-90	REC93306-305U8		REC93306-30510	REC93602-20M02	
50G	1993-98	REC93311-636U6		REC93306-306V1	REC93603-18M09	REC93310-522A4
50G ETO	2000	REC93311-636U6		REC93306-306V1	REC93603-18M09	REC93310-522A4
50G ETOL	2001-06	REC93311-636U6		REC93306-306V1	REC93603-18M09	REC93310-522A4
50H	1994-99	REC93306-305U8		REC93306-305U8	REC93602-20M02	REC93310-522A4
50H EDO	2000	REC93306-305U8		REC93306-305U8	REC93602-20M02	REC93310-522A4
50H EDOL/EDOS	2001-02	REC93306-305U8		REC93306-305U8	REC93602-20M02	REC93310-522A4
50H MDO/MO	2000	REC93306-305U8		REC93306-305U8	REC93602-20M02	REC93310-522A4
55B	1993-98	REC93311-632U1			REC93603-21111	REC93311-832U4
55B E	1990-00	REC93311-632U1	REC93311-832U4		REC93603-21111	REC93311-832U4
55B EHD/ET	2000	REC93311-632U1	REC93311-832U4		REC93603-21111	REC93311-832U4
55B ETL	2001-02	REC93311-632U1	REC93311-832U4		REC93603-21111	REC93311-832U4
60F	1984-98	REC93311-636U6		REC93306-306V1	REC93603-18M09	
60F EO/ETO	2000	REC93311-636U6		REC93306-306V1	REC93603-18M09	
60F ETOL	2001-06	REC93311-636U6		REC93306-306V1	REC93603-18M09	
E60HMHD	2003	REC93311-636U6		REC93306-306V1		REC93310-527W1
E60 ELHB	2003	REC93311-636U6		REC93306-306V1		REC93310-527W1
E60H MHDL	2001-06	REC93311-636U6		REC93306-306V1	REC93603-18M09	
70B	1984-98	REC93311-636U6		REC93306-306V1	REC93603-18M09	
70B EDOL	2001	REC93311-636U6		REC93306-306V1	REC93603-18M09	
70B EO/ETO	2000	REC93311-636U6		REC93306-306V1	REC93603-18M09	
70B ETOL	2001-06	REC93311-636U6		REC93306-306V1	REC93603-18M09	
75A	1993-98	REC93310-636U4	REC93310-835U8	REC93306-206U5	REC93603-21111	REC93310-730V8
75A E	1990-00	REC93310-636U4	REC93310-835U8	REC93306-206U5	REC93603-21111	REC93310-730V8
75A EDL	2001-06	REC93310-636U4	REC93310-835U8	REC93306-206U5	REC93603-21111	REC93310-730V8
75A EM	1992	REC93310-636U4	REC93310-835U8	REC93306-206U5	REC93603-21111	REC93310-730V8
75A ET/ETL	2000	REC93310-636U4	REC93310-835U8	REC93306-206U5	REC93603-21111	REC93310-730V8
75A MHD	2000	REC93310-636U4	REC93310-835U8	REC93306-206U5	REC93603-21111	REC93310-730V8
75C	1998	REC93310-636U4	REC93310-835U8	REC93306-206U5	REC93603-21111	REC93310-730V8
75C ETO	2000	REC93310-636U4	REC93310-835U8	REC93306-206U5	REC93603-21111	REC93310-730V8

MODELO MODEL MODELLO	AÑOS YEARS ANNI	SUP. CIGÜEÑAL UP CRANKSHAFT SUP. ALBERO MOTORE	CEN. CIGÜEÑAL CENT. CRANK CEN. ALBERO MOTORE	INF. CIGÜEÑAL LOWER CRANK INF. ALBERO MOTORE	CABEZA PIE UP CON. ROAD GABBIA A RULLI	PIE BIELA LOW CON. ROAD BRONZINE BIELLA
75C ETOL	2001-06	REC93310-636U4	REC93310-835U8	REC93306-206U5	REC93603-21111	REC93310-730V8
80A	1985-95	REC93310-636U4	REC93310-835U8	REC93306-206U5	REC93603-21111	REC93310-730V8
85A	1996-98	REC93310-636U4	REC93310-835U8	REC93306-206U5	REC93603-21111	REC93310-730V8
85A E	1990-2000	REC93310-636U4	REC93310-835U8	REC93306-206U5	REC93603-21111	REC93310-730V8
85A ET/ETL	2000	REC93310-636U4	REC93310-835U8	REC93306-206U5	REC93603-21111	REC93310-730V8
90A	1984-98	REC93310-636U4	REC93310-835U8	REC93306-206U5	REC93603-21111	REC93310-730V8
90A ETO/ETOL	2000	REC93310-636U4	REC93310-835U8	REC93306-206U5	REC93603-21111	REC93310-730V8
100A	1998	REC93311-940U3	REC93310-954U1	REC93306-208U0	REC93310-323V6	REC93310-836V2
100A ETO	2000	REC93311-940U3	REC93310-954U1	REC93306-208U0	REC93310-323V6	REC93310-836V2
100A ETOL	2001	REC93311-940U3	REC93310-954U1	REC93306-208U0	REC93310-323V6	REC93310-836V2
115A	1984-87	REC93311-940U3	REC93310-954V3	REC93306-208U0	REC93603-21111	REC93310-836V2
115B	1988-92	REC93311-940U3	REC93310-954V3	REC93306-208U0	REC93603-21111	REC93310-836V2
115B	1993-96	REC93311-940U3	REC93310-954V3	REC93306-208U0	REC93310-323V6	REC93310-836V2
115B ETOL	2001-02	REC93311-940U3	REC93310-954U1	REC93306-208U0	REC93310-323V6	REC93310-836U0
115C	1988-91	REC93311-940U3	REC93310-954V3	REC93306-208U0	REC93603-21111	REC93310-836V2
115C	1992-98	REC93311-940U3	REC93310-954V3	REC93306-208U0	REC93310-323V6	REC93310-836V2
115C ETO	2000	REC93311-940U3	REC93310-954U1	REC93306-208U0	REC93310-323V6	REC93310-836V2
115C ETOL	2001	REC93311-940U3	REC93310-954U1	REC93306-208U0	REC93310-323V6	REC93310-836U0
115C ETOX	1988-91	REC93311-940U3	REC93310-954U1	REC93306-208U0	REC93310-323V6	REC93310-836V2
130B	1992-98	REC93311-940U3	REC93310-954V3	REC93306-208U0	REC93603-21111	REC93310-836V2
130B	2001-06	REC93311-940U3	REC93310-954V3	REC93306-208U0	REC93310-323V6	REC93310-836V2
130B ETO	2000-2005	REC93306-307UO	REC93332-000UE	REC93306-208U0	REC93603-21111	REC93310-836V2
130B ETOL	2001-06	REC93311-940U3	REC93310-954U1	REC93306-208U0	REC93310-323V6	REC93310-836V2
130B ETOX	2001	REC93311-940U3	REC93310-954U1	REC93306-208U0	REC93310-323V6	REC93310-836U0
L130B	1988-91	REC93311-940U3	REC93310-954U1	REC93306-208U0	REC93310-323V6	REC93310-836V2
L130B	1992-98	REC93311-940U3	REC93310-954U1	REC93306-208U0	REC93603-21111	REC93310-836V2
L130B ETO	2000	REC93311-940U3	REC93310-954U1	REC93306-208U0	REC93310-323V6	REC93310-836V2
L130B ETO	2001	REC93311-940U3	REC93310-954U1	REC93306-208U0	REC93310-323V6	REC93310-836V2
140A	1984-89	REC93311-940U3	REC93310-954U1	REC93306-208U0	REC93310-323V6	REC93310-836V2
140B	1988-89	REC93311-940U3	REC93310-954V3	REC93306-208U0	REC93603-21111	REC93310-836V2
L140B	1989	REC93311-940U3	REC93310-954V3	REC93306-208U0	REC93603-21111	REC93310-836V2
150A	1984-89	REC93311-940U3	REC93310-954V3	REC93306-208U0	REC93603-21111	REC93310-836V2
150A ET	1998-00	REC93311-940U3	REC93310-954V3	REC93306-208U0	REC93603-21111	REC93310-836V2
150A ETL	2001-02	REC93311-940U3	REC93310-954U1	REC93306-208U0	REC93310-323V6	REC93310-836V2
150A ETX	2001-02	REC93311-940U3	REC93310-954U1	REC93306-208U0	REC93310-323V6	REC93310-836V2
L150C	1988-91	REC93311-940U3	REC93310-954U1	REC93306-208U0	REC93310-323V6	REC93310-836V2
150C	1988-91	REC93311-940U3	REC93310-954V3	REC93306-208U0	REC93603-21111	REC93310-836V2
150C	1992-95	REC93311-940U3	REC93310-954V3	REC93306-208U0	REC93603-21111	REC93310-836V2
150F	1996-98	REC93311-940U3	REC93310-954V3	REC93306-208U0	REC93310-323V6	REC93310-836V2
150F ETO	2000	REC93311-940U3	REC93310-954U1	REC93306-208U0	REC93310-323V6	REC93310-836V2
150F ETOL	2001-06	REC93311-940U3	REC93310-954U1	REC93306-208U0	REC93310-323V6	REC93310-836V2
150F ETOX	2001-06	REC93311-940U3	REC93310-954U1	REC93306-208U0	REC93310-32337	REC93310-836V2
D150H	1999	REC93311-940U3	REC93310-954U1	REC93306-208U0	REC93310-32337	REC93310-836V2
D150HETO	2001-02	REC93311-940U3	REC93310-954U1	REC93306-208U0	REC93310-323V6	REC93310-836V2
L150A	1988-89	REC93311-940U3	REC93310-954U1	REC93306-208U0	REC93310-323V6	REC93310-836V2
L150C	1990-95	REC93311-940U3	REC93310-954V3	REC93306-208U0	REC93603-21111	REC93310-836V2
L150F	1996-98	REC93311-940U3	REC93310-954V3	REC93306-208U0	REC93310-323V6	REC93310-836V2
L150F ETO	2000	REC93311-940U3	REC93310-954U1	REC93306-208U0	REC93310-323V6	REC93310-836V2
L150F ETOL	2001	REC93311-940U3	REC93310-954U1	REC93306-208U0	REC93310-323V6	REC93310-836V2
L150 EOTX	2001	REC93311-940U3	REC93310-954U1	REC93306-208U0	REC93310-323V6	REC93310-836V2
LZ150PETO	2000-06	REC93311-940U3	REC93310-954U1	REC93306-208U0	REC93310-323V6	REC93310-836V2
Z150P ETO	2000	REC93311-940U3	REC93310-954U1	REC93306-208U0	REC93310-32337	REC93310-836U0
Z150P ETO	2001-06	REC93311-940U3	REC93310-954U1	REC93306-208U0	REC93310-32337	REC93310-836U0
Z150Q ETO	2000	REC93311-940U3	REC93310-954U1	REC93306-208U0	REC93310-32337	REC93310-836U0
Z150Q ETOL	2001-06	REC93311-940U3	REC93310-954U1	REC93306-208U0	REC93310-323V6	REC93310-836U0
175A	1984-89	REC93311-940U3	REC93310-954U1	REC93306-208U0	REC93310-32337	REC93310-836U0
175B	1978-95	REC93311-940U3	REC93310-954V3	REC93306-208U0	REC93603-21111	REC93310-836V2
175D	1996-98	REC93311-940U3	REC93310-954V3	REC93306-208U0	REC93310-323V6	REC93310-836V2
175D ETO/ETOL	2000	REC93311-940U3	REC93310-954U1	REC93306-208U0	REC93310-323V6	REC93310-836V2
175D ETOX/ETOL	2001-02	REC93311-940U3	REC93310-954U1	REC93306-208U0	REC93310-323V6	REC93310-836V2
175D ETOL	2001	REC93311-940U3	REC93310-954U1	REC93306-208U0	REC93310-323V6	REC93310-836V2
Z175G ETOX	2001-06	REC93311-940U3	REC93310-954U1	REC93306-208U0	REC93310-323V6	REC93310-836U0
200A	1984-89	REC93311-940U3	REC93310-954U1	REC93306-208U0	REC93310-32337	REC93310-836U0
200B	1990-95	REC93311-940U3	REC93310-954V3	REC93306-208U0	REC93603-21111	REC93310-836V2
200F	1996-98	REC93311-940U3	REC93310-954V3	REC93306-208U0	REC93310-323V6	REC93310-836V2
200F ETO/ETOL	2000	REC93311-940U3	REC93310-954U1	REC93306-208U0	REC93310-323V6	REC93310-836V2
200F ETOX	2001-06	REC93311-940U3	REC93310-954U1	REC93306-208U0	REC93310-32337	REC93310-836V2
200G	1999-02	REC93311-940U3	REC93310-954U1	REC93306-208U0	REC93310-32337	REC93310-836V2
200G ETO/ETOL	2000	REC93311-940U3	REC93310-954U1	REC93306-208U0	REC93310-323V6	REC93310-836V2
L200A	1988-91	REC93311-940U3	REC93310-954U1	REC93306-208U0	REC93310-323V6	REC93310-836V2

MODELO MODEL MODELLO	AÑOS YEARS ANNI	SUP. CIGÜEÑAL UP CRANKSHAFT SUP. ALBERO MOTORE	CEN. CIGÜEÑAL CENT. CRANK CEN. ALBERO MOTORE	INF. CIGÜEÑAL LOWER CRANK INF. ALBERO MOTORE	CABEZA PIE UP CON. ROAD GABBIA A RULLI	PIE BIELA LOW CON. ROAD BRONZINE BIELLA
L200B	1992-95	REC93311-940U3	REC93310-954V3	REC93306-208U0	REC93603-21111	REC93310-836V2
L200F	1996-98	REC93311-940U3	REC93310-954V3	REC93306-208U0	REC93310-323V6	REC93310-836V2
L200F ETO/ETOL	2000	REC93311-940U3	REC93310-954U1	REC93306-208U0	REC93310-323V6	REC93310-836V2
LZ200N ETO	2000	REC93311-940U3	REC93310-954U1	REC93306-208U0	REC93310-32337	REC93310-836V2
LZ200NETO		REC93311-940U3	REC93310-954U1	REC93306-208U0	REC93310-323V6	REC93310-836U0
Z200N ETO	2001-06	REC93311-940U3	REC93310-954U1	REC93306-208U0	REC93310-32337	REC93310-836U0
Z200 N ETOL	2000	REC93311-940U3	REC93310-954U1	REC93306-208U0	REC93310-323V6	REC93310-836U0
Z200N ETOX/ ETOL	2001-06	REC93311-940U3	REC93310-954U1	REC93306-208U0	REC93310-32337	REC93310-836U0
220A	2003-06	REC93311-940U3	REC93310-954U1	REC93306-208U0	REC93310-32337	REC93310-836U0
225A	1984-86	REC93311-940U3	REC93310-954V3	REC93306-208U0	REC93603-21111	REC93310-836V2
225A	1987-89	REC93311-940U3	REC93310-954V3	REC93306-208U0	REC93603-21111	REC93310-836V2
225D ETO	2000	REC93311-940U3	REC93310-954U1	REC93306-208U0	REC93310-323V6	REC93310-836V2
225D ETOL/ETOX	2001-03	REC93311-940U3	REC93310-954U1	REC93306-208U0	REC93310-323V6	REC93310-836V2
250AET	1996-06				REC93310-326V4	
250B	95-02				REC93310-326V4	
225G	99-03				REC93310-326V4	
225A	1984-86	REC93311-940U3	REC93310-954V3	REC93306-208U0	REC93603-21111	REC93310-836V2
225A	1987-89	REC93311-940U3	REC93310-954V3	REC93306-208U0	REC93603-21111	REC93310-836V2
225D ETO	2000	REC93311-940U3	REC93310-954U1	REC93306-208U0	REC93310-323V6	REC93310-836V2
225D ETOL/ETOX	2001-03	REC93311-940U3	REC93310-954U1	REC93306-208U0	REC93310-323V6	REC93310-836V2
250AET	1996-06				REC93310-326V4	
250B	95-02				REC93310-326V4	
225G	99-03				REC93310-326V4	

GUÍA CIGÜEÑAL
CRANKSHAFT GUIDE
GUIDA ALBERO MOTORE

MODELO MODEL MODELLO	AÑO INICIO YEAR FROM DALL'ANNO	AÑO FIN YEAR TO ALL'ANNO	PARTE 1 PART 1 PARTE 1	PARTE 2 PART 2 PARTE 2	PARTE 3 PART 3 PARTE 3	PARTE 4 PART 4 PARTE 4
6B/8B	1980	1981	REC677-11412-02	REC677-11422-02	REC677-11432-02	REC677-11442-02
E8D	1996	1999	REC677-11412-02	REC677-11422-02	REC677-11432-02	REC677-11442-02
E8D MH	1998	1999	REC677-11412-02	REC677-11422-02	REC677-11432-02	REC677-11442-02
9.9D	1985	1987	REC682-11412-00	REC682-11422-00	REC682-11432-00	REC682-11442-00
9.9D	1988	1995	REC63V-11412-00	REC6K4-11422-00	REC6K4-11432-00	REC682-11442-00
9.9F/MH	1995	2014	REC63V-11412-00	REC63V-11422-00	REC63V-11432-00	REC63V-11442-00
9.9F WH	2000	2000	REC63V-11412-00	REC63V-11422-00	REC63V-11432-00	REC63V-11442-00
9.9F WHL/S	2001	2001	REC63V-11412-00	REC63V-11422-00	REC63V-11432-00	REC63V-11442-00
13.5A	1999	2006	REC63V-11412-00	REC63V-11422-00	REC63V-11432-00	REC63V-11442-00
15D	1985	1987	REC682-11412-00	REC682-11422-00	REC63V-11432-00	REC682-11442-00
15D	1988	1995	REC682-11412-00	REC6K4-11422-00	REC6K4-11432-00	REC682-11442-00
15F/MH	1995	2014	REC63V-11412-00	REC63V-11412-00	REC63V-11432-00	REC63V-11442-00
E15D	2003	2003	REC63V-11412-00	REC63V-11422-00	REC63V-11432-00	REC63V-11442-00
15F WCL	2001	2003	REC63V-11412-00	REC63V-11422-00	REC63V-11432-00	REC63V-11442-00
15 WCS	2001	2002	REC63V-11412-00	REC63V-11422-00	REC63V-11432-00	REC63V-11442-00
20C	1981	1986	REC6G0-11412-10	REC6G0-11422-00	REC6G0-11432-00	REC695-11442-00
20C	1996	2002		REC6G0-11422-00	REC6G0-11432-00	
20C M	1990	2002	REC6G0-11412-10	REC6G0-11422-00	REC6G0-11432-00	REC695-11442-00
25D	1985	1987	REC6G0-11412-10	REC6G0-11422-00	REC6G0-11432-00	REC695-11442-00
25D M	1990	1997	REC6G0-11412-10	REC6G0-11422-00	REC6G0-11432-00	REC6G0-11442-00
25D MH	1998	1998	REC6G0-11412-10	REC6G0-11422-10	REC6G0-11432-00	REC6G0-11442-00
25D MHL/MHS	2001	2001	REC6G0-11412-10	REC6G0-11422-10	REC6G0-11432-00	REC6G0-11442-00
40X/E40X/MH	1998	2002	REC66T-11412-00	REC66T-11422-00	REC66T-11432-00	REC66T-11442-00
40X MHL	2001	2013	REC66T-11412-00	REC66T-11422-00	REC66T-11432-00	REC66T-11442-00
40X MHS	2001	2013	REC66T-11412-00	REC66T-11422-00	REC66T-11432-00	REC66T-11442-00
40X W	2000	2000	REC66T-11412-00	REC66T-11422-00	REC66T-11432-00	REC66T-11442-00
40X WL/WS	2001	2003	REC66T-11412-00	REC66T-11422-00	REC66T-11432-00	REC66T-11442-00
40X WT	2000	2000	REC66T-11412-00	REC66T-11422-00	REC66T-11432-00	REC66T-11442-00
40X WTL	2001	2003	REC66T-11412-00	REC66T-11422-00	REC66T-11432-00	REC66T-11442-00
40GM/W/J	2003	2004	REC6F5-11412-11	REC6F5-11422-11	REC6F5-11432-11	REC6F5-11442-11

PARTE 1 / Part 1

PARTE 2 / Part 2

PARTE 3 / Part 3

PARTE 4 / Part 4

MODELO MODEL MODELLO	AÑO INICIO YEAR FROM DALL'ANNO	AÑO FIN YEAR TO ALL'ANNO	CIGÜEÑAL CRANKSHAFT ALBERO MOTORE
E48CMHS	2003	2003	**REC663-11411-01**
E55CMH/L/S	2003	2005	**REC663-11411-01**
55B	1993	2002	**REC663-11411-01**
55B E	1990	1992	**REC663-11411-01**
55B EHD	2000	2000	**REC663-11411-01**
55B ET	1990	1998	**REC663-11411-01**
55B ETL	2001	2002	**REC663-11411-00**
80A/90AETO	1988	1988	**REC688-11411-00**
100A	1996	2001	**REC6N7-11411-01**
100A A ETO	2000	2000	**REC6N7-11411-01**
100A ETOL	2001	2001	**REC6N7-11411-01**
115A	1984	1987	**REC6E5-11411-00**
115B	1985	2001	**REC6E5-11411-00**
115B ETO	1997	2000	**REC6N7-11411-01**
115B ETOL	2001	2002	**REC6N7-11411-01**
115CEO	1990	1998	**REC6N7-11411-01**
115C ETO	1995	2001	**REC6N7-11411-01**
115CETOL/CETOX	2001	2001	**REC6N7-11411-01**
130BETO	1990	2001	**REC6N7-11411-01**
130BETOL/BETOX	2001	2001	**REC6N7-11411-01**
L130B	1991	1998	**REC6N7-11411-01**
L130B ETO	2000	2000	**REC6N7-11411-01**
L130B ETOX	2001	2001	**REC6N7-11411-01**
140A	1984	1987	**REC6E5-11411-00**
140B	1988	1989	**REC6E5-11411-00**
L140B	1989	1989	**REC6E5-11411-00**
150A	1984	1989	**REC6G5-11411-02**
150A ET	1998	2000	**REC6G5-11411-02**
150A ETL/ETX	2001	2001	**REC6G5-11411-02**
150D ETOL	2001	2003	**REC6G5-11411-02**
150F	1997	1998	**REC6G5-11411-02**
150F ETO	2000	2000	**REC6G5-11411-02**
150FETOL-X	2002	2007	**REC6G5-11411-02**
150F ETOL	2001	2006	**REC6G5-11411-02**
150F ETOX	2001	2006	**REC6G5-11411-02**
D150H	1999	1999	**REC6G5-11411-02**
DX150TLRA	2002	2002	**REC67H-11411-00**
L150A	1988	1989	**REC6G5-11411-02**
L150CETO	1990	1995	**REC6R3-11411-00**
L150F	1997	1998	**REC6G5-11411-02**
L150F ETO	2000	2000	**REC6G5-11411-02**
L150 FETOL/FETOX	2001	2001	**REC6G5-11411-02**
SX150TXRA	2002	2002	**REC67H-11411-00**

MODELO MODEL MODELLO	AÑO INICIO YEAR FROM DALL'ANNO	AÑO FIN YEAR TO ALL'ANNO	CIGÜEÑAL CRANKSHAFT ALBERO MOTORE
175A	1984	1989	**REC6G5-11411-02**
175BETO/ET	1990	1995	**REC6R3-11411-00**
175D	1997	1998	**REC6G5-11411-02**
175D ETO	2000	2000	**REC6G5-11411-02**
175D ETOX	2001	2002	**REC6G5-11411-02**
200A	1984	1989	**REC6G5-11411-02**
200AET-L-X	2003	2003	**REC6G5-11411-02**
200BETO/ETD	1990	1995	**REC6R3-11411-00**
200CETO	1992	1993	**REC6R3-11411-00**
200F	1997	1998	**REC6G5-11411-02**
200F ETO	2000	2000	**REC6G5-11411-02**
200F ETOL	2001	2001	**REC6G5-11411-02**
200FETOL-X	2002	2010	**REC6G5-11411-02**
200F ETOX	2001	2001	**REC6G5-11411-02**
200G	1999	1999	**REC6G5-11411-02**
200G ETO	2000	2000	**REC6G5-11411-02**
200G ETOL	2001	2001	**REC6G5-11411-02**
L200A	1988	1991	**REC6G5-11411-02**
L200BETO/ET	1990	1995	**REC6R3-11411-00**
L200F	1997	1998	**REC6G5-11411-02**
L200F ETO	2000	2000	**REC6G5-11411-02**
PROV200	1991	1995	**REC6R3-11411-00**
220AET	1984	1986	**REC6G5-11411-02**
225AETO	1987	1989	**REC6G5-11411-02**
225D-DET	1997	2001	**REC6G5-11411-02**

GUÍA CIGÜEÑAL
CRANKSHAFT GUIDE
GUIDA ALBERO MOTORE

MODELO MODEL MODELLO	AÑO INICIO YEAR FROM DALL'ANNO	AÑO FIN YEAR TO ALL'ANNO	CIGÜEÑAL CRANKSHAFT ALBERO MOTORE
F2.5 ALL	2003	2013	**PAF2.6-04030000**
F4 ALL	1998	2009	**PAF4-04030000**
F9.9 ALL	1998	2009	**PAF15-07030000**
F13.5 ALL	1999	2007	**PAF15-07030000**
F15 ALL	1998	2007	**PAF15-07030000**
T25E/TL/R/B	2000	2009	**PAF25-05020001**
F25 ALL	1999	2009	**PAF25-05020001**
F20/AE/S/TL	2003	2006	**PAF25-05020001**
F45AET	1999	1999	**PAF25-05020001**
F50TJR	1999	1999	**PAF25-05020001**

GUÍA BIELAS
CONNECTING ROAD GUIDE
GUIDA BIELLE

MODELO MODEL MODELLO	AÑOS YEARS ANNI	BIELA CONNEC. ROAD BIELLA	ARANDELA P. BIELA WASHER DOWN RONDELLA GIÙ BIELLA	ARANDELA CA. BIELA WASHER UP RONDELLA SU BIELLA	BULÓN PIN BULONE	PASAD. PIE BIELA PIN DOW PASSO BIELLA
2B	1986-2002	**REC646-11651-02**	**REC90209-18112**			**REC646-11681-00**
2MSHA/S/B	2002-03	**REC646-11651-02**				**REC646-11681-00**
2CMHS	2010	**REC646-11651-02**				**REC646-11681-00**
4A	1985-87	**REC6E0-11651-00**			**REC6G1-11633-00**	**REC6G1-11681-00**
4AC	1987-99	**REC6E0-11651-00**	**REC90209-18112**		**REC6G1-11633-00**	**REC6G1-11681-00**
4AC MHL/HS	2001-03	**REC6E0-11651-00**	**REC90209-18112**		**REC6G1-11633-00**	**REC6G1-11681-00**
4AS	1987-96	**REC6E0-11651-00**	**REC90209-18112**		**REC6G1-11633-00**	**REC6G1-11681-00**
4BC	1998-99	**REC6E0-11651-00**	**REC90209-18112**		**REC6G1-11633-00**	**REC6G1-11681-00**
4BC	1999	**REC6E0-11651-00**	**REC90209-18112**		**REC6G1-11633-00**	**REC6G1-11681-00**
4BC MHL/HS	2001-03	**REC6E0-11651-00**	**REC90209-18112**		**REC6G1-11633-00**	**REC6G1-11681-00**
5C	1985-99	**REC6E0-11651-00**	**REC90209-18112**		**REC6G1-11633-00**	**REC6G1-11681-00**
5C MHL/MHS	2001-06	**REC6E0-11651-00**	**REC90209-18112**	**REC90201-12565**	**REC6G1-11633-00**	**REC6G1-11681-00**
5CS	1987-96	**REC650-11651-00**	**REC90209-20159**	**REC90201-14377**	**REC634-11633-00**	**REC682-11681-00**
6C	1990		**REC90209-20159**	**REC90201-14377**	**REC634-11633-00**	**REC682-11681-00**
6C	1990-98		**REC90209-20159**	**REC90201-14377**	**REC634-11633-00**	**REC682-11681-00**
6C MHL/HS	2001-06		**REC90209-18112**	**REC90201-14377**	**REC634-11633-00**	**REC682-11681-00**
6C WHL/HS	2001		**REC90209-18112**	**REC90201-14377**	**REC634-11633-00**	**REC682-11681-00**

MODELO MODEL MODELLO	AÑOS YEARS ANNI	BIELA CONNEC. ROAD BIELLA	ARANDELA P. BIELA WASHER DOWN RONDELLA GIÙ BIELLA	ARANDELA CA. BIELA WASHER UP RONDELLA SU BIELLA	BULÓN PIN BULONE	PASAD. PIE BIELA PIN DOW PASSO BIELLA
6C	1990		REC90209-18112	REC90201-14377	REC634-11633-00	REC682-11681-00
6D	1990-98		REC90209-18112	REC90201-14377	REC634-11633-00	REC682-11681-00
6D MHL/HS	2001-06			REC90201-14377	REC634-11633-00	REC682-11681-00
6D WHS	2001		REC90209-18112	REC90201-14377	REC634-11633-00	REC682-11681-00
8C	1990-98	REC677-11651-00	REC90209-18112	REC90201-14377	REC634-11633-00	REC682-11681-00
8C	1990	REC677-11651-00	REC90209-18112	REC90201-14377	REC634-11633-00	REC682-11681-00
8C MHL/HS	2001-06	REC677-11651-00	REC90209-20159	REC90201-14377	REC634-11633-00	REC682-11681-00
8C MHX	2001-03	REC677-11651-00	REC90209-20159	REC90201-14377	REC634-11633-00	REC682-11681-00
8C WHL7HS	2001-02	REC677-11651-00	REC90209-20159	REC90201-14377	REC634-11633-00	REC682-11681-00
E8D	1997-98	REC6E0-11651-00	REC90209-18112	REC90201-14377	REC634-11633-00	REC682-11681-00
E8D MH	1999	REC6E0-11651-00	REC90209-18112	REC90201-14377	REC634-11633-00	REC682-11681-00
9.9D	1985-89	REC650-11651-00		REC90201-14377	REC634-11633-00	REC682-11681-00
9.9D	1985-95	REC6K4-11651-00		REC90201-14377	REC634-11633-00	REC682-11681-00
9.9D	1990-95	REC6K4-11651-00	REC90209-20159	REC90201-14377	REC634-11633-00	REC648-11681-00
9.9F	1995-99	REC648-11651-00	REC90209-20159	REC90201-14377	REC648-11633-00	REC682-11681-00
9.9F MH	2000	REC648-11651-00	REC90209-20M23	REC90201-14377	REC648-11633-00	REC682-11681-00
9.9F MHL	2001-06	REC648-11651-00	REC90209-20M23	REC90201-14377	REC648-11633-00	REC682-11681-00
9.9F MHS	2001-06	REC648-11651-00	REC90209-20M23	REC90201-14377	REC648-11633-00	REC682-11681-00
9.9F WC	2000	REC648-11651-00	REC90209-22071	REC90201-20M27	REC648-11633-00	REC682-11681-00
9.9F WH	2000	REC689-11651-00	REC90209-24M03	REC90201-20M27	REC689-11633-00	REC689-11681-00
9.9F WHL/HS	2001	REC689-11651-00	REC90209-24M03	REC90201-20M27	REC689-11633-00	REC689-11681-00
13.5A	1999	REC689-11651-00	REC90209-24M03	REC90201-20M27	REC689-11633-00	REC689-11681-00
13.5A MH	2000	REC689-11651-00	REC90209-24M03	REC90201-20M27	REC689-11633-00	REC689-11681-00
13.5A MHL	2001-04	REC689-11651-00	REC90209-24M03	REC90201-20M27	REC689-11633-00	REC689-11681-00
13.5A MHS	2001-04	REC689-11651-00	REC90209-22071	REC90201-14377	REC648-11633-00	REC648-11681-00
13.5A WH	2000	REC648-11651-00	REC90209-22248	REC90201-14377	REC648-11633-00	REC648-11681-00
15D	1985-89	REC648-11651-00	REC90209-22248	REC90201-14377	REC648-11633-00	REC648-11681-00
15D	1985-95	REC648-11651-00	REC90209-22071	REC90201-14377	REC648-11633-00	REC648-11681-00
15D	1990-95	REC648-11651-00	REC90209-22071	REC90201-14377	REC648-11633-00	REC648-11681-00
15F	1995-99	REC648-11651-00	REC90209-24M03	REC90201-20M27	REC689-11633-00	REC689-11681-00
15F MH	2000	REC689-11651-00	REC90209-24M03	REC90201-20M27	REC689-11633-00	REC689-11681-00
15F MHL/HS	2001-06	REC689-11651-00	REC90209-24M03	REC90201-20M27	REC689-11633-00	REC689-11681-00
13.5A MH	2000	REC689-11651-00	REC90209-24M03	REC90201-20M27	REC689-11633-00	REC689-11681-00
13.5A MHL	2001-04	REC689-11651-00	REC90209-24M03	REC90201-20M27	REC689-11633-00	REC689-11681-00
13.5A MHS	2001-04	REC689-11651-00	REC90209-22071	REC90201-14377	REC648-11633-00	REC648-11681-00
13.5A WH	2000	REC648-11651-00	REC90209-22248	REC90201-14377	REC648-11633-00	REC648-11681-00
15D	1985-89	REC648-11651-00	REC90209-22248	REC90201-14377	REC648-11633-00	REC648-11681-00
15D	1985-95	REC648-11651-00	REC90209-22071	REC90201-14377	REC648-11633-00	REC648-11681-00
15D	1990-95	REC648-11651-00	REC90209-22071	REC90201-14377	REC648-11633-00	REC648-11681-00
15F	1995-99	REC648-11651-00	REC90209-24M03	REC90201-20M27	REC689-11633-00	REC689-11681-00
15F MH	2000	REC689-11651-00	REC90209-24M03	REC90201-20M27	REC689-11633-00	REC689-11681-00
15F MHL/HS	2001-06	REC689-11651-00	REC90209-24M03	REC90201-20M27	REC689-11633-00	REC689-11681-00
15F WC	2000	REC689-11651-00	REC90209-24M03	REC90201-20M27	REC689-11633-00	REC689-11681-00
15F WCL	2001-03	REC689-11651-00	REC90209-24M03	REC90201-20M27	REC689-11633-00	REC689-11681-00
15F WCS	2001-02	REC689-11651-00	REC90209-24M03	REC90201-20M27	REC689-11633-00	REC689-11681-00
20C	1985-93	REC689-11651-00	REC90209-24M03	REC90201-20M27	REC689-11633-00	REC689-11681-00
20C	1986-02	REC648-11651-00	REC90209-22071	REC90201-20417	REC648-11633-00	REC648-11681-00
20C	1993	REC6F5-11651-00	REC90209-27M07	REC90201-20417	REC6F5-11633-00	REC66T-11681-00
20C M	1990-97	REC6F5-11651-00	REC90209-27M07	REC90201-20417	REC6F5-11633-00	REC66T-11681-00
20C MH	1998	REC6F5-11651-00	REC90209-27M07	REC90201-20417	REC6F5-11633-00	REC66T-11681-00
20C MHL	2001-02	REC6F5-11651-00	REC90209-27M07	REC90201-20417	REC6F5-11633-00	REC66T-11681-00
20C MHS	2001-02	REC6F5-11651-00	REC90209-27M07	REC90201-20417	REC6F5-11633-00	REC66T-11681-00
20D	1994-98	REC6F5-11651-00	REC90209-27M07	REC90201-20417	REC6F5-11633-00	REC66T-11681-00
20D MHOL	2001-06	REC6F5-11651-00	REC90209-27M07	REC90201-20417	REC6F5-11633-00	REC66T-11681-00
20D MHOS	2001-06	REC6F5-11651-00	REC90209-27M07	REC90201-20417	REC6F5-11633-00	REC66T-11681-00
20D WOL/OS	2006	REC6F5-11651-00	REC90209-27M07	REC90201-20417	REC6F5-11633-00	REC66T-11681-00
25B	1994-02	REC689-11651-00	REC90209-24M03	REC90201-20417	REC663-11633-00	REC689-11681-00
25B MHL/HS	2001-06	REC689-11651-00	REC90209-24M03	REC90201-20417	REC663-11633-00	REC689-11681-00
25B WCS	2001-02	REC689-11651-00	REC90209-24M03	REC90201-20417	REC663-11633-00	REC689-11681-00
25D	1985-01	REC648-11651-00	REC90209-22071	REC90201-20417	REC663-11633-00	REC648-11681-00
25D	1986-87	REC648-11651-00	REC90209-22071	REC90201-20417	REC663-11633-00	REC648-11681-00
25D M	1990-97	REC648-11651-00		REC90201-20417	REC663-11633-00	

MODELO MODEL MODELLO	AÑOS YEARS ANNI	BIELA CONNEC. ROAD BIELLA	ARANDELA P. BIELA WASHER DOWN RONDELLA GIÙ BIELLA	ARANDELA CA. BIELA WASHER UP RONDELLA SU BIELLA	BULÓN PIN BULONE	PASAD. PIE BIELA PIN DOW PASSO BIELLA
25D MH	1998	REC648-11651-00				
25D MHL	2001	REC648-11651-00				
25D MHS	2001	REC648-11651-00				
25N	1994-98	REC6G0-11651-00		REC90201-20417	REC6H3-11633-00	
25N MHOL/S	2001-06	REC689-11651-00		REC90201-20417	REC663-11633-00	
25N WOL/WOS	2001-03	REC689-11651-00		REC90201-20417	REC663-11633-00	
25V	1996-98	REC689-11651-00	REC90209-24M03	REC90201-20417	REC663-11633-00	REC689-11681-00
25V MHL/HS	2001	REC689-11651-00	REC90209-24M03	REC90201-20417	REC663-11633-00	REC689-11681-00
25V WCS	2001	REC689-11651-00	REC90209-24M03	REC90201-20417	REC663-11633-00	REC689-11681-00
30A	1985	REC689-11651-00	REC90209-24M03	REC90201-20417	REC663-11633-00	REC689-11681-00
30A M	1990-92	REC689-11651-00	REC90209-24M03	REC90201-20417	REC663-11633-00	REC689-11681-00
30D	1986-00	REC689-11651-00		REC90201-20417	REC663-11633-00	
30D EOL/EOS	2001-06	REC689-11651-00		REC90201-20417	REC663-11633-00	
30D ETOL	2001-06	REC689-11651-00		REC90201-20417	REC663-11633-00	
30D MHOL	2001-06	REC689-11651-00		REC90201-20417	REC663-11633-00	
30D MHOS	2001-05	REC689-11651-00		REC90201-20417	REC663-11633-00	
30D OL	2001-03	REC689-11651-00		REC90201-20417	REC663-11633-00	
30D EOS	2001-06			REC90201-23M01	REC6R5-11633-00	
40G/J	1986-89	REC6F5-11651-00	REC90209-27M11		REC6F5-11633-00	REC6F5-11681-00
40R ROS	2001			REC90201-23M01	REC6R5-11633-00	
40V	1994-99	REC6H4-11651-00		REC90201-23M01	REC6R5-11633-00	
40V EO	2000	REC6E5-11651-00		REC90201-23M01	REC6R5-11633-00	
40V EOL/EOS	2001-06			REC90201-23M01	REC6R5-11633-00	
40V ETO	2000	REC6E5-11651-00			REC6E5-11633-00	
40V ETOL	2001-03	REC6E5-11651-00				
40V ETOS	2001-03	REC6E5-11651-00				
40V MHOL	2001-06	REC6E5-11651-00			REC6E5-11633-00	
40V MHOS	2001-06			REC90201-23M01	REC6R5-11633-00	
40V MO	2000			REC90201-23M01	REC6R5-11633-00	
40V MOS	2002-05			REC90201-23M01	REC6R5-11633-00	
40X	1998	REC6F5-11651-00	REC90209-27M07	REC90201-23M01	REC6F5-11633-00	REC667-11681-00
40X MH	2000	REC6F5-11651-00	REC90209-27M07	REC90201-23M01	REC6F5-11633-00	REC66T-11681-00
40X MHL	2001-06	REC6F5-11651-00	REC90209-27M07	REC90201-23M01	REC6F5-11633-00	REC66T-11681-00
40 MHS	2001-02	REC6F5-11651-00	REC90209-27M07	REC90201-23M01	REC6F5-11633-00	REC66T-11681-00
40X W	2000	REC6F5-11651-00	REC90209-27M07	REC90201-23M01	REC6F5-11633-00	REC66T-11681-00
40X WL	2001	REC6F5-11651-00	REC90209-27M07	REC90201-23M01	REC6F5-11633-00	REC66T-11681-00
40X WS	2001	REC6E5-11651-00	REC90209-27M07		REC6F5-11633-00	REC66T-11681-00
40X WT	2000	REC6E5-11651-00	REC90209-27M07	REC90201-23M01	REC6F5-11633-00	REC66T-11681-00
40X WTL	2001-03		REC90209-27M07	REC90201-23M01	REC6F5-11633-00	REC66T-11681-00
40Y ETOL	2001-06			REC90201-23M01	REC6R5-11633-00	
40Y MHOS	2001-06			REC90201-23M01	REC6R5-11633-00	
40GM,W,J	2003-04	REC6F5-11651-00	REC90209-27M07	REC27-90209-27M07	REC6F5-11633-00	REC6F5-11681-00
50D	1984-87			REC90201-23M01	REC6R5-11633-00	
50G	1993-98	REC6H4-11651-00	REC90209-24M03		REC648-11633-00	REC6G0-11681-00
50G ETO	2000	REC6E5-11651-00	REC90209-24M03	REC90201-23M01	REC648-11633-00	REC6G0-11681-00
50G ETOL	2001-06		REC90209-24M03	REC90201-23M01	REC648-11633-00	REC6G0-11681-00
50H	1994-99	REC6H4-11651-00	REC90209-24M03	REC90201-23M01	REC648-11633-00	REC6G0-11681-00
50H EDO	2000	REC6H4-11651-00	REC90209-24M03	REC90201-23M01	REC648-11633-00	REC6G0-11681-00
50H EDOL	2001-02	REC6H4-11651-00	REC90209-24M03	REC90201-23M01	REC648-11633-00	REC6G0-11681-00
50H EDOS	2001-02	REC6E5-11651-00	REC90209-24M03		REC648-11633-00	REC6G0-11681-00
50H MDO	2000	REC6E5-11651-00	REC90209-24M03	REC90201-23M01	REC648-11633-00	REC6G0-11681-00
50H MO	2000		REC90209-24M03	REC90201-23M01	REC648-11633-00	REC6G0-11681-00
55B	1993-98	REC688-11651-00		REC90201-23M01	REC6R5-11633-00	
70B ETOL	2001-06	REC6E5-11651-00		REC90201-23M01	REC6R5-11633-00	
75A	1993-98	REC688-11651-00		REC90201-23M01	REC6R5-11633-00	
75A E	1990-00	REC688-11651-00		REC90201-23M01	REC6R5-11633-00	
75A EDL	2001-06	REC688-11651-00		REC90201-23M01	REC6R5-11633-00	
75A EM	1992	REC688-11651-00		REC90201-23M01	REC6R5-11633-00	
75A ET	2000	REC688-11651-00				
75A ETL	2001-02	REC688-11651-00				
75A MHD	2000	REC688-11651-00				
75C	1998	REC688-11651-00				

MODELO MODEL MODELLO	AÑOS YEARS ANNI	BIELA CONNEC. ROAD BIELLA	ARANDELA P. BIELA WASHER DOWN RONDELLA GIÙ BIELLA	ARANDELA CA. BIELA WASHER UP RONDELLA SU BIELLA	BULÓN PIN BULONE	PASAD. PIE BIELA PIN DOW PASSO BIELLA
75C ETO	2000	**REC688-11651-00**				
75C ETOL	2001-06	**REC688-11651-00**				
80A	1985-96	**REC688-11651-00**				
85A	1996-98	**REC688-11651-00**				
85A E	1990-00	**REC688-11651-00**				
85A ET	2000	**REC688-11651-00**				
85A ETL	2001-02	**REC688-11651-00**				
90A	1984-98	**REC688-11651-00**				
90A ETO	2000-00	**REC688-11651-00**				
90A ETOL	2001-06	**REC688-11651-00**				
V4-V6 BULÓN 21.5		**REC6E5-11651-00**				
V4-V6 BULÓN 23		**REC6R5-11651-00**				
E60 ELHB	2003					**REC6K5-11681-00**
E60HMHD	2003					**REC6K5-11681-00**
225 AET	1986				**REC6E5-11633-00**	
115 B	1988-90				**REC6K7-11633-00**	
115BE-T	1991-92				**REC6KT-11633-00**	
140 BETO	1988-89				**REC6KT-11633-00**	
150 AETO	1988-89				**REC6KT-11633-00**	
200-225 BETO	1990-92				**REC6KT-11633-00**	
175 BETO	1990-92				**REC6KT-11633-00**	

JUNTA DE CULATA
GASKET CYLINDER HEAD
GUARNIZIONE TESTATA

Ref.	R.O.
REC6F8-11181-A0	6F8-11181-A1

MOTORES / ENGINES / MOTORI
2CMH (2010)

Ref.	R.O.
REC677-11181-A0	677-11181-A1

MOTORES / ENGINES / MOTORI
E8D/DMH (1997-03)

Ref.	R.O.
REC63V-11181-A1	63V-11181-A1

MOTORES / ENGINES / MOTORI
9.9F/MH/MSH
E9.9D
15F/FMH/MSH
E15D
13.5 AWH/AMH (1995+)

Ref.	R.O.
REC6E7-11181-00	6E7-11181-A2

MOTORES / ENGINES / MOTORI
9.9D
15D (1988-96)

Ref.	R.O.
REC6L2-11181-A1	6L2-11181-A3

MOTORES / ENGINES / MOTORI
20D/M
25D/M/N (1988+)

Ref.	R.O.
REC695-11181-00	695-11181-A1

MOTORES / ENGINES / MOTORI
20C
25D (1986-02)

Ref.	R.O.
REC6H3-11181-A0	6H3-11181-A2

MOTORES / ENGINES / MOTORI
25B
50G
60T
E60
60FE
70B/ET/CE (1984+)

Ref.	R.O.
REC6H4-11181-00	6H4-11181-A2

MOTORES / ENGINES / MOTORI
25Q
40N/H
50E/D (1984-94)

Ref.	R.O.
REC61N-11181-00	61N-11181-A2

MOTORES / ENGINES / MOTORI
25VE/VM
E25A/BMH
30G
E30HMH/H (1996-12)

Ref.	R.O.
REC689-11181-00	689-11181-A2

MOTORES / ENGINES / MOTORI
30A (1990-92)

Ref.	R.O.
REC6J8-11181-00	6J8-11181-A2

MOTORES / ENGINES / MOTORI
30D
25J (1986+)

Ref.	R.O.
REC6F5-11181-A2	6F5-11181-A2

MOTORES / ENGINES / MOTORI
40GWH/JWH
E40GMH/JMH (2003)

4 TIEMPOS 4 STROKES
JUNTA DE CULATA
GASKET CYLINDER HEAD
GUARNIZIONE TESTATA

Ref.	R.O.
REC63D-11181-A1	63D-11181-A2

MOTORES / ENGINES / MOTORI
40V 50H/TLR/TR
C40/EL/TLR/Y (1995+)

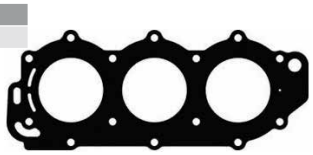

Ref.	R.O.
REC6R7-11181-A0	6R7-11181-A1

MOTORES / ENGINES / MOTORI
40G (1993)

Ref.	R.O.
REC676-11181-01	676-11181-A2

MOTORES / ENGINES / MOTORI
40QE/QM/QWC (1990-98)

Ref.	R.O.
REC66T-11181-00	66T-11181-A0

MOTORES / ENGINES / MOTORI
40X
E40X/M (1998-09)

Ref.	R.O.
REC697-11181-A1	697-11181-A2

MOTORES / ENGINES / MOTORI
E55CMH 55BET
E48CMH 55B/BE/BM (1990-05)

Ref.	R.O.
REC688-11181-A1	688-11181-A2

MOTORES / ENGINES / MOTORI
75A/AE/CET 85A/AE
80A/AE 90A/AE/TR (1986-14)

Ref.	R.O.
REC6E5-11181-A0	6E5-11181-A2

MOTORES / ENGINES / MOTORI
100A C115T 130B
115A/E/B/C 140A (1984+)

Ref.	R.O.
REC6G5-11181-A2	6G5-11181-A3

MOTORES / ENGINES / MOTORI
150A/E/C/AET
175AET/B/D
200AET/B/C/FETGE
225AET/BETO/D

Ref.	R.O.
REC60V-11181-00	60V-11181-00

MOTORES / ENGINES / MOTORI
Z250
VZ250
LZ250 (2003-07)

Ref.	R.O.
REC68F-11181-00	68F-11181-00

MOTORES / ENGINES / MOTORI
Z/VZ/LZ200 (2001-07)
Z/VZ/LZ150 (2000-07)
Z/VZ175 (2001-07)

Ref.	R.O.
REC6D0-11181-00	6D0-11181-00

MOTORES / ENGINES / MOTORI
VZ/LZ/Z300 (2004-007)

Ref.	R.O.
PAF2.6-04000001	69M-11181-00

MOTORES / ENGINES / MOTORI
F2.5 (2003+)

Ref.	R.O.
PAF4-04000014	67D-11181-A0

MOTORES / ENGINES / MOTORI
F4 (1998-2009)

Ref.	R.O.
REC6G8-11181-A1	6G8-11181-A1

MOTORES / ENGINES / MOTORI
F8/9.9 (1985-96)

Ref.	R.O.
PAF15-07000100	66M-11181-10

MOTORES / ENGINES / MOTORI
F9.9/13.5/15 (1998-08)

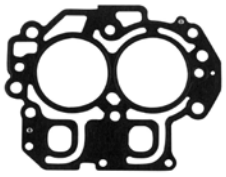

Ref.	R.O.
REC6AG-11181-00	6AG-11181-00

MOTORES / ENGINES / MOTORI
F9.9/15/20 (2007+)

Ref.	R.O.
REC6BL-11181-00	6BL-11181-00

MOTORES / ENGINES / MOTORI
F20/25
FT25
T25 (2009+)

Ref.	R.O.
PAF25-05040000	65W-11181-30

MOTORES / ENGINES / MOTORI
F20/25
T25
F45/50 (1998-09)

Ref.	R.O.
REC67C-11181-01	67C-11181-01

MOTORES / ENGINES / MOTORI
F30/40 (2000-09)

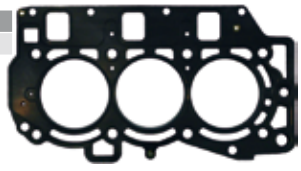

Ref.	R.O.
REC6BG-11181-00	6BG-11181-00

MOTORES / ENGINES / MOTORI
F30/40 (2009+)

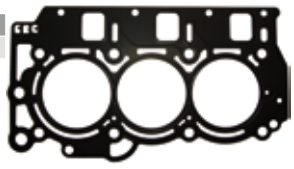

YAMAHA

RECAMBIOS MARINOS S.L.

Ref.	R.O.
REC6CJ-11181-00	6CJ-11181-00

MOTORES / ENGINES / MOTORI
F40GE/70 (2011+)

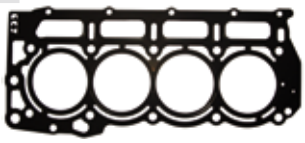

Ref.	R.O.
REC67F-11181-03	67F-11181-03

MOTORES / ENGINES / MOTORI
F75/80/100/115 (1999+)

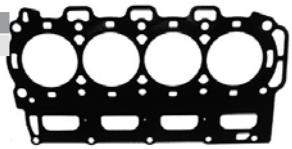

Ref.	R.O.
REC63P-11181-00	63P-11181-00

MOTORES / ENGINES / MOTORI
F150
FL150 (2004+)

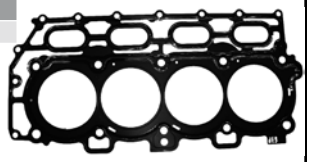

Ref.	R.O.
REC6P2-11182-00	6P2-11182-00 (PORT)

MOTORES / ENGINES / MOTORI
F200/225/250
FL-LF 200/225/250 (2006-13)

Ref.	R.O.
REC6P2-11181-00	6P2-11181-00 (STB)

MOTORES / ENGINES / MOTORI
F200/225/250
FL-LF 200/225/250 (2006-13)

Ref.	R.O.
REC69J-11182-03	69J-11182-03 (PORT)

MOTORES / ENGINES / MOTORI
F200/225
FL200/225 (2002-07)

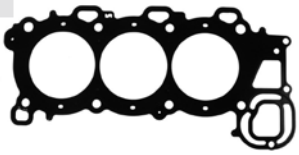

Ref.	R.O.
REC69J-11181-03	69J-11181-03 (STB)

MOTORES / ENGINES / MOTORI
F200/225
FL200/225 (2002-07)

Ref.	R.O.
REC6DA-11181-00	6DA-11181-00

MOTORES / ENGINES / MOTORI
F175/200
FL200 (2013+)

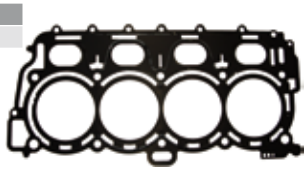

Ref.	R.O.
REC6CB-11181-00	6CB-11181-00

MOTORES / ENGINES / MOTORI
F225/250/300
LF-FL225/250/300 (2011+)

Ref.	R.O.
REC6AW-11181-00	6AW-11181-00 (PORT)

MOTORES / ENGINES / MOTORI
F300/FL300 (2008+)

Ref.	R.O.
REC6AW-11182-00	6AW-11182-00 (STB)

MOTORES / ENGINES / MOTORI
F300
FL300 (2008+)

2 TIEMPOS STROKES — KIT DE JUNTA DE CULATA / GASKET KITS / KIT GUARNIZIONI TESTATA

Ref.	R.O.
REC63V-W0001-00	63V-W0001-01

MOTORES / ENGINES / MOTORI
9.9-15F/FMH/FEMH/MSH (1995-00)
13.5AWH (1998)

Ref.	R.O.
REC61T-W0001-02	61T-W0001-02

MOTORES / ENGINES / MOTORI
E25A, 25VM, 30G/GE/A

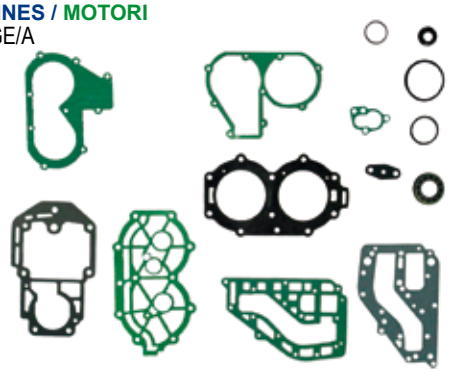

Ref.	R.O.
REC6H3-W0001-02	6H3-W0001-02

MOTORES / ENGINES / MOTORI
25B/BETO (1994-95)
50G/GEO/GETOL (1994-98)
60FEO/FETO/FEDO/TLR/FEHTO/TR (1994-2007)

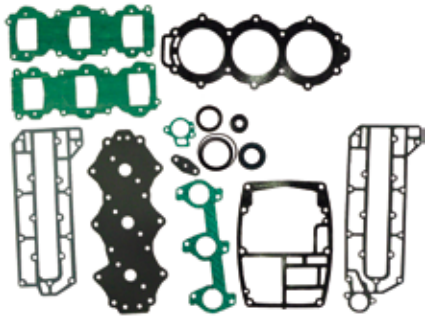

Ref.	R.O.
REC6H4-W0001-04	6H4-W0001-04

MOTORES / ENGINES / MOTORI
25QEO (1992-94)
40HE (1992-94)
50DE/DEMTO (1992-94)

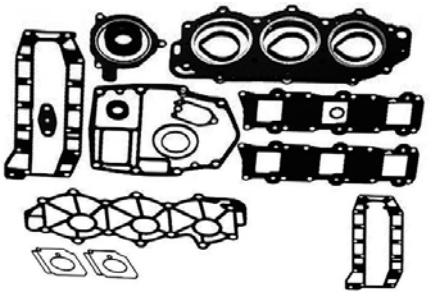

Ref.	R.O.
REC6L2-W0001-03-00	6L2-W0001-A2

MOTORES / ENGINES / MOTORI
25NE (1988-93) 25NEMO (1991-92)
20DM (1988-93) 20D/DEO (1989-92)

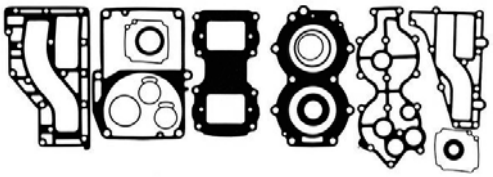

Ref.	R.O.
REC695-W0001-A2	695-W0001-01

MOTORES / ENGINES / MOTORI
25D/DE (1985-92)
20CM/C (1985-92)

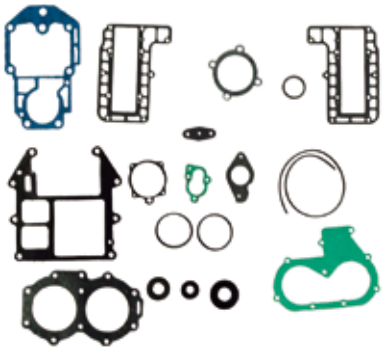

Ref.	R.O.
REC6R6-W0001-02-00-00	6R6-W0001-02

MOTORES / ENGINES / MOTORI
40QE-2 (1995-97)
40QM (1996)
40QWC (1998)

Ref.	R.O.
REC66T-W0001-01	66T-W0001-01

MOTORES / ENGINES / MOTORI
E40X/XMH/XW/
MLHZ (2001-13)

Ref.	R.O.
REC6H4-W0001-A1	6H4-W0001-01

MOTORES / ENGINES / MOTORI
40N (1984)
40H (1985-98)
50D (1985-98)
50ETN (1984)

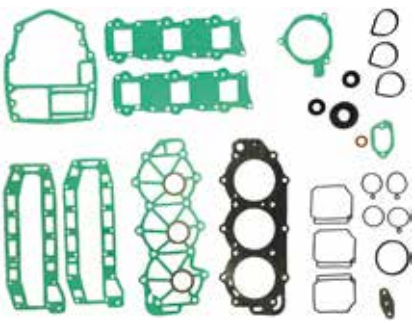

Ref.	R.O.
REC63D-W0001-00	63D-W0001-00

MOTORES / ENGINES / MOTORI
50H/HRDO/HMDH/HETO (1995-03)
40V/VMH/VETO/MLH/MHO/VE/VEO (1995-13)
40VEMHD/TLRZ/YETO (1997-07)
C40T/TLR (1995-02)

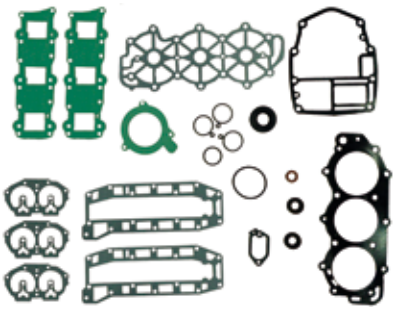

Ref.	R.O.
REC697-W0001-02	697-W0001-A0

MOTORES / ENGINES / MOTORI
55BET (1990)

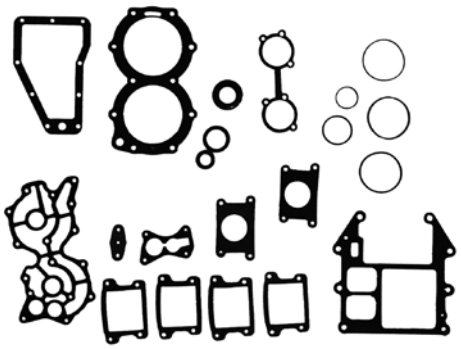

Ref.	R.O.
REC6K5-W0001-02	6K5-W0001-02

MOTORES / ENGINES / MOTORI
E60H/MHZ/HE/HM (1996-02)

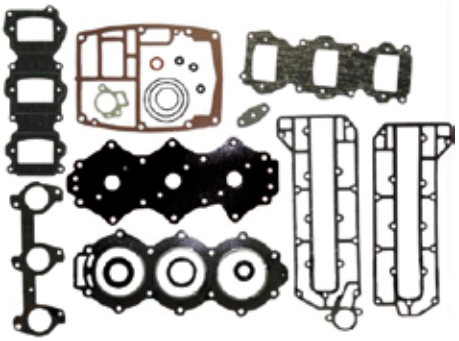

Ref.	R.O.
REC688-W0001-A0	688-W0001-A0

MOTORES / ENGINES / MOTORI
75A/AE (1990-91)
85A/AE (1990-91)

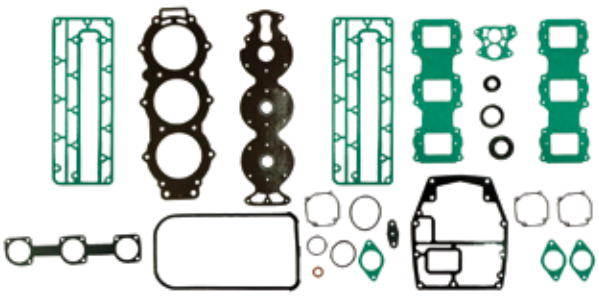

Ref.	R.O.
REC6H1-W0001-00	6H1-W0001-A1

MOTORES / ENGINES / MOTORI
80A/AE (1984-91)
80AEO (1992-93)
90A/AEO/AETO/ETN (1984-91)
90AEO (1992)

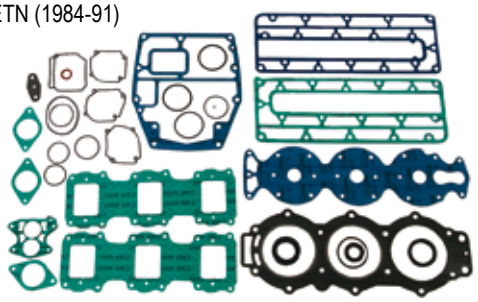

Ref.	R.O.
REC6E5-W0001-A2	6E5-W0001-A2

MOTORES / ENGINES / MOTORI
L130BETO (1991-99)
115CEO/CETO (1991-96)
100A/AETO/TLR (1996-00)

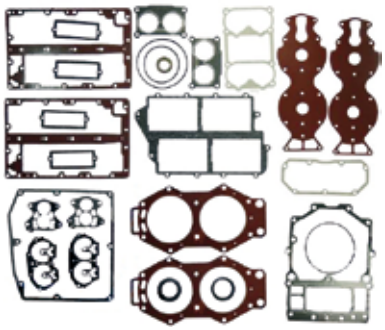

Ref.	R.O.
REC6F3-W0001-04-00	6F3-W0001-A4

MOTORES / ENGINES / MOTORI
115BETO (1991-93)
115B (1988-00)
115ETN (1984)
115A (1987)
140AETO/BETO (1984-89)
115BE (1992)

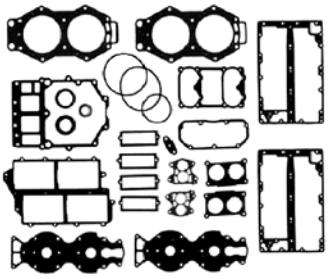

Ref.	R.O.
REC6R3-W0001-03	6R3-W0001-A3

MOTORES / ENGINES / MOTORI
L/150 CETO (1990-95) L200ETD (1990)
L/200 BETO (1993-95) 150CED/ETD (1990)
175BETO/ET (1990-95) 200ET (1990)

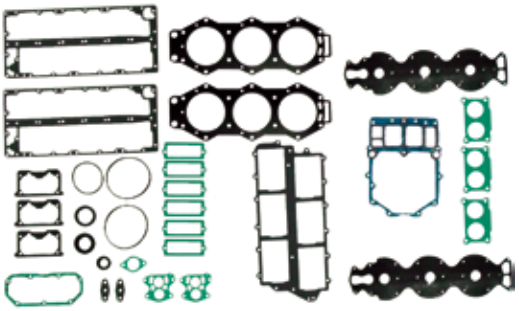

Ref.	R.O.
REC68F-W0001-01	68F-W0001-01

MOTORES / ENGINES / MOTORI
LZ200 (2204-10)
VZ200 (2004)
Z200 (2004-10)
Z
VZ200TLRC/PETO/TLR2D/PETOL/TXRC/
NETO-L/TR/NETOX/Z175GETO/GETOX/TR/TXR (2004-07)

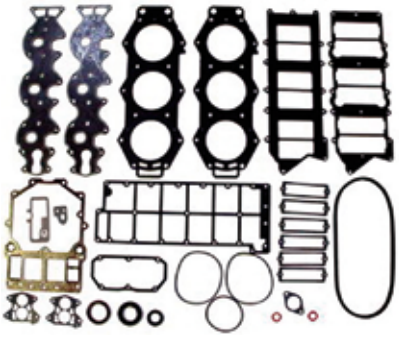

Ref.	R.O.
REC6G5-W0001-A3	6G5-W0001-03

MOTORES / ENGINES / MOTORI
200CETO (1992-93)
PROV200 (1991-94)
225BET/BETO (1991-95)
150A/AETO/AETL/AETX (1998-02)

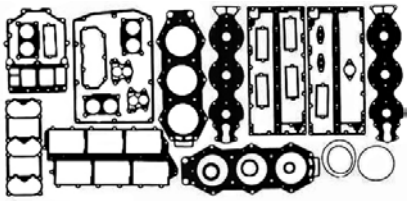

Ref.	R.O.
REC61A-W0001-01	61A-W0001-A1

MOTORES / ENGINES / MOTORI
250ETD (1990)
250AETO/AET/B (1990-96)
L250A/AET/AETO (1992-96)
225C (1994-95)
L225CETO (1994)

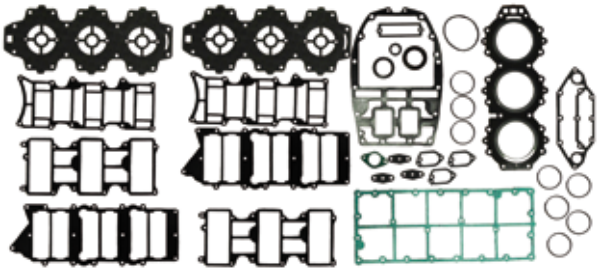

Ref.	R.O.
REC6D0-W0001-00	6D0-W0001-00

MOTORES / ENGINES / MOTORI
Z300AETO/TR
LZ300AETO/TR (2004-07)

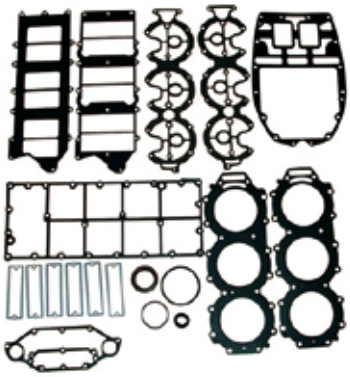

4 TIEMPOS STROKES — KIT DE JUNTA DE CULATA / GASKET KITS / KIT GUARNIZIONI TESTATA

Ref.	R.O.
REC6G8-W0001-A3	6G8-W0001-A3

MOTORES / ENGINES / MOTORI
F9.9 (1996-99)
F8BM (1996-99)

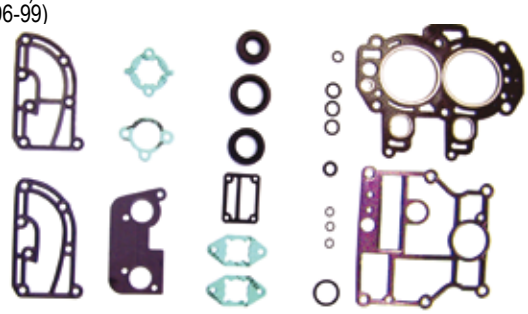

Ref.	R.O.
REC66M-W0001-01	66M-0001-01

MOTORES / ENGINES / MOTORI
F15 (2001-04)
F13.5 (2002-04)
FT 9.9/T9.9 (2001-04)
F9.9 (2001-04)

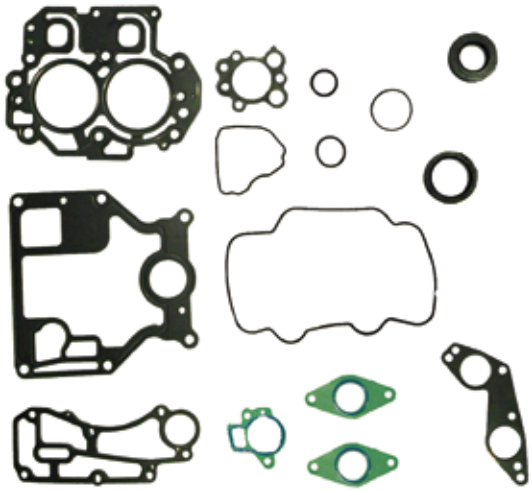

Ref.	R.O.
REC65W-W0001-00	65W-W0001-00

MOTORES / ENGINES / MOTORI
F20/25 (1998-01)
T25/FT25 (2000-01)

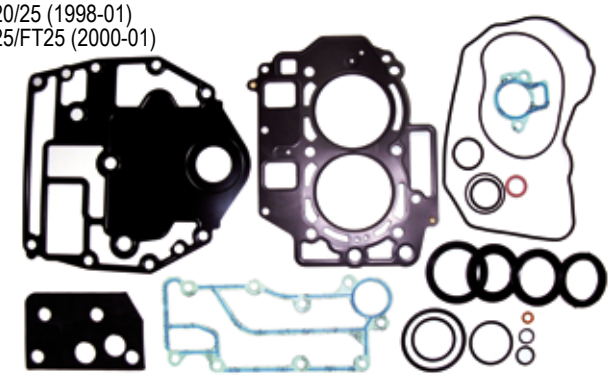

Ref.	R.O.
REC67C-W0001-01	67C-W0001-00/01

MOTORES / ENGINES / MOTORI
F30 ALL
F40ALL (2000-09)

2 TIEMPOS STROKES — JUNTA BASE MOTOR / GASKET CYLINDER / GUARNIZIONI BASE MOTORI

Ref.	R.O.
REC6E0-45113-A1	6E0-45113-A1

MOTORES / ENGINES / MOTORI
4A/AC/AS/MSH
5C/CS/CMH

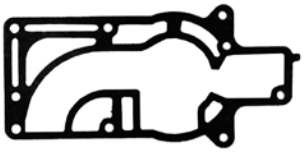

Ref.	R.O.
REC6H3-45113-00	6H3-45113-A0

MOTORES / ENGINES / MOTORI
60FE/TLR/F,
50G/GE
E60H
70B/BE/CE/TR

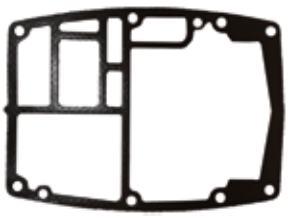

Ref.	R.O.
REC6G5-45113-A1	6G5-45113-A2

MOTORES / ENGINES / MOTORI
115ETN/A/B
130BE
150ETN/AET/CET/F/TXR/G
140AET/BET
175AET/BET/DE
150BET
200ETN/AET/CET/BET/AF/G
220AET
225AET/BET/D

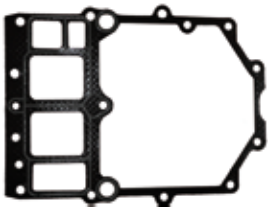

Ref.	R.O.
REC6F5-45113-A0	6F5-45113-A0

MOTORES / ENGINES / MOTORI
E40G/E40J/40G/40J/40Q

Ref.	R.O.
REC6E5-45113-A2	6E5-45113-A0

MOTORES / ENGINES / MOTORI
115B/ET
140AE/BE

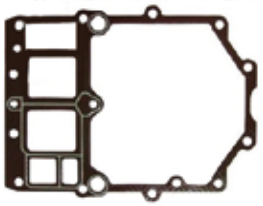

Ref.	R.O.
REC61T-45113-A0	61T-45113-A0

MOTORES / ENGINES / MOTORI
25VE/BMH
30G/HW

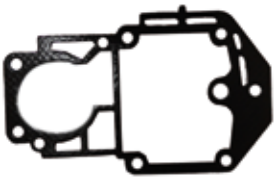

Ref.	R.O.
REC63V-45113-A1	63V-45113-A1

MOTORES / ENGINES / MOTORI
9.9FEM/F/MSH/FMH/MH
13.5 AW/AMH
15F/FEM/MSH/FMH/MH

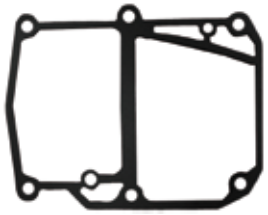

Ref.	R.O.
REC66T-45113-A0	66T-45113-A0

MOTORES / ENGINES / MOTORI
40X/E40X

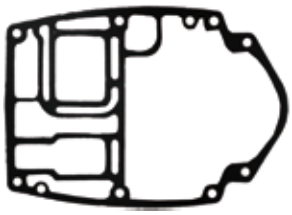

Ref.	R.O.
REC677-45113-A0	

MOTORES / ENGINES / MOTORI
E8D/DMH

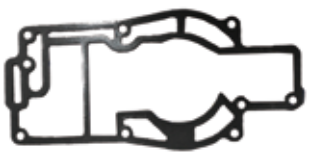

YAMAHA

RECAMBIOS MARINOS S.L.

Ref.	R.O.
REC688-45113-A0	688-45113-A0

MOTORES / ENGINES / MOTORI
75A/AE/CE/TL
85A/AE
80A/AE
90A/AE/ETN

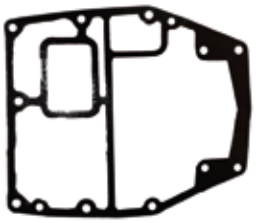

Ref.	R.O.
REC682-11351-A0	682-11351-A0

MOTORES / ENGINES / MOTORI
9.9D
15D

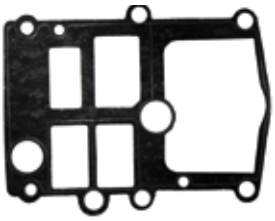

Ref.	R.O.
REC6J8-45113-00	6J8-45113-A0

MOTORES / ENGINES / MOTORI
25J
30D/DMH/DE/E/M

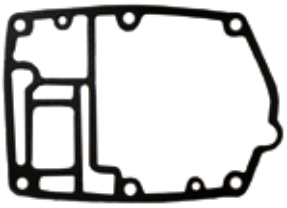

Ref.	R.O.
REC6H4-45113-00	6H4-45113-A0

MOTORES / ENGINES / MOTORI
25Q
40N/H/E/V/T/Y
50D/H/T

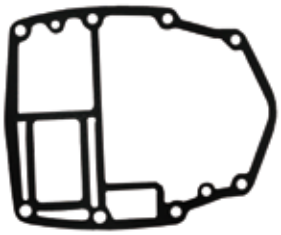

Ref.	R.O.
REC696-45113-00	696-45113-A0

MOTORES / ENGINES / MOTORI
55B/E55
E48

Ref.	R.O.
REC6L2-45113-A2	6L2-45113-A1

MOTORES / ENGINES / MOTORI
20D
25D/N/M

Ref.	R.O.
REC68F-45113-01	68F-45113-01

MOTORES / ENGINES / MOTORI
Z/VZ150 150F/A
Z/ VZ175 Z200
VZ-Z200/200A/F/J

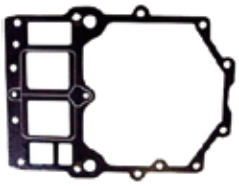

Ref.	R.O.
REC6G1-45113-A1	6G1-45113-A1

MOTORES / ENGINES / MOTORI
8N/C/J/T/M
6C/J/D/T/M

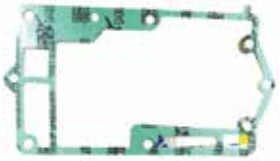

Ref.	R.O.
REC60V-45113-02	60V-45113-02

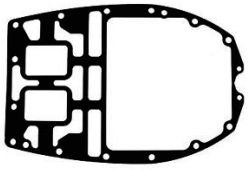

Ref.	R.O.
REC61A-45113-A0	61A-45113-A0

MOTORES / ENGINES / MOTORI
Z/VZ250
Z300

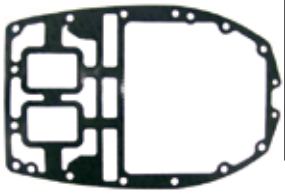

Ref.	R.O.
REC6AH-11351-00	6AH-11351-00

MOTORES / ENGINES / MOTORI
F9.9 (2009-13)
F13.5 (2007-09)
F15 (2007-13)
F20 (2007-13)

4 TIEMPOS STROKES
JUNTA BASE MOTOR
GASKET CYLINDER
GUARNIZIONI BASE MOTORI

Ref.	R.O.
PAF2.6-00000003	69M-45113-A0

MOTORES / ENGINES / MOTORI
F2.5

Ref.	R.O.
PAF6-00000001	6BX-45113-00

MOTORES / ENGINES / MOTORI
F4/F5/F6

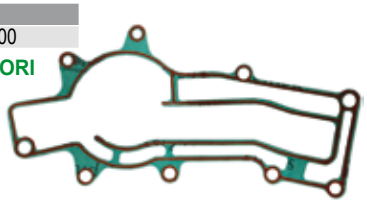

Ref.	R.O.
PAF4-00000006	67D-45113-A0

MOTORES / ENGINES / MOTORI
F4

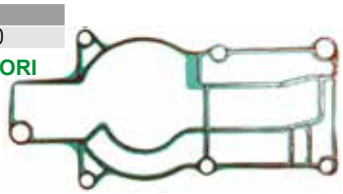

Ref.	R.O.
PAF15-00000014	66M-11351-10

MOTORES / ENGINES / MOTORI
T/FT9.9
F9.9
F15
F13.5

Ref.	R.O.
REC6G8-11351-A0	6G8-11351-A0

MOTORES / ENGINES / MOTORI
T/FT 9.9
F9.9
F8

Ref.	R.O.
PAF25-00000013	65W-11351-10

MOTORES / ENGINES / MOTORI
F20
F25
T/FT25

Ref.	R.O.
REC6AH-11351-00	6AH-11351-10

MOTORES / ENGINES / MOTORI
F9.9
F13.5
F15
F20

Ref.	R.O.
REC67C-11351-00	67C-11351-01

MOTORES / ENGINES / MOTORI
F40 T/FT60
T/FT50 F30
F50 F60

Ref.	R.O.
REC68V-11351-00	68V-11351-00

MOTORES / ENGINES / MOTORI
F75
F80
F90
F115
F100

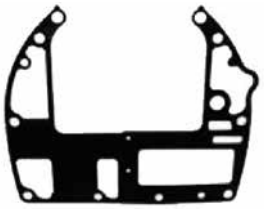

Ref.	R.O.
REC63P-11351-01	63P-11351-01

MOTORES / ENGINES / MOTORI
F150
F175
F200

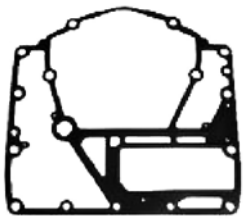

Ref.	R.O.
REC69J-11351-11	69J-11351-11

MOTORES / ENGINES / MOTORI
F200
F225
F250

Ref.	R.O.
REC6AW-11351-00	

MOTORES / ENGINES / MOTORI
F300
F350

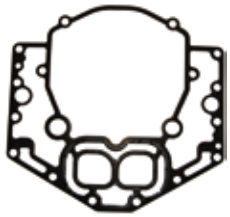

2 TIEMPOS STROKES

GUÍA JUNTAS MOTOR
ENGINE GASKET GUIDE
GUIDA GUARNIZIONE MOTORE

MODELO MODEL MODELLO	AÑO YEAR ANNO	CIL. CYL. CIL.	JUNTA CULATA GASKET CYL. HEAD GUARNIZIONE TESTATA	KIT JUNTAS SUP. MOTOR GASKET ENGINE KIT GUARN. PARTE ALTA MOTORE	JUNTA BASE MOTOR GASKET CYLINDER GUARN. PARTE BASSA MOTORE
2CMH	2010	1	REC6F8-11181-A1		
E8D/DMH	1997-03	2	REC677-11181-A0		REC677-45113-A0
9.9D	1988-96	2	REC6E7-11181-00	REC6E7-W0001-A1	REC6E7-45113-A0
9.9F/FM/MSH/E9.9D	1995+	2	REC63V-11181-A1	REC63V-W0001-02	REC63V-45113-A1
13.5AWH/AMH	1995+	2	REC63V-11181-A1	REC63V-W0001-02	REC63V-45113-A1
15D	1988-95	2	REC6E7-11181-00	REC6E7-W0001-A1	REC6E7-45113-A0
15F/FMH/MSH/E15D	1995+	2	REC63V-11181-A1	REC63V-W0001-02	REC63V-45113-A1
20C	1986-02	2	REC695-11181-00	REC695-W0001-02	REC689-45113-A1
20D/20DM	1988+	2	REC6L2-11181-A1	REC6L2-W0001-03-00	REC6L2-45113-A2
25DE/M/N	1998+	2	REC6L2-11181-A1	REC6L2-W0001-03-00	REC6L2-45113-A2
25DE/M/N	1986-02	2	REC695-11181-00	REC695-W0001-02	REC689-45113-A1
25VE/VM/BMH/E25A	1996-12	2	REC61N-11181-00	REC61T-W0001-02	REC61T-45113-A0
25Q/QEO	1990-94	3	REC6H4-11181-00	REC6H4-W0001-A1	REC6H4-45113-00
25J/JEO/JETO	1987 -99	3	REC6J8-11181-00		REC6J8-45113-00
25B/BETO	1994-95	3	REC6H3-11181-A0	REC6H3-W0001-02	REC6H3-45113-00
25B/BMH	1996-10	2	REC61N-11181-00	REC61T-W0001-02	REC61T-45113-A0
30A	1990-92	2	REC689-11181-02	REC61T-W0001-02	REC689-45113-A1
30G/E30HMH/H	1996-12	2	REC61N-11181-00	REC61N-W0001-02	REC61T-45113-A0
30D	1986+	3	REC6J8-11181-00		REC6J8-45113-00
40QE/QM/QWC	1990-98	2	REC676-11181-01	REC6R6-W0001-02-00	REC6F5-45113-A0
40N/H	1984-94	3	REC6H4-11181-00	REC6H4-W0001-A1	REC6H4-45113-00
40G	1993	2	REC6R7-11181-A0	REC6R6-W0001-02-00	REC6F5-45113-A0
40X/E40/M/X	1998+	2	REC66T-11181-00	REC66T-W0001-01	REC66T-45113-A0
40/E40GMH/JMH	2003	2	REC6F5-11181-A2	REC6F6-W0001-02	REC6F5-45113-A0
40V/C40/EL/TLR/Y-YE	1995 +	3	REC63D-11181-A1	REC63D-W0001-00	REC6H4-45113-A0
E48	2003	2	REC697-11181-A1	REC697-W0001-02	REC696-45113-00
50H/TLR/TR	1995 +	3	REC63D-11181-A1	REC63D-W0001-00	REC6H4-45113-A0
50G/GEO/GETO	1993-02	3	REC6H3-11181-A0	REC6H3-W0001-02	REC6H3-45113-00
50E/D	1984-94	3	REC6H4-11181-00	REC6H4-W0001-A1	REC6H4-45113-00
55B/E55	1990-05	2	REC697-11181-A1	REC697-W0001-02	REC697-45114-00
60FE/T/E60	1984+	3	REC6H3-11181-A0	REC6H3-W0001-02	REC6H3-45113-00
70B/ET/CE	1984+	3	REC6H3-11181-A0	REC6H3-W0001-02	REC6H3-45113-00
70A/AE/CET	1986+	3	REC688-11181-A1	REC688-W0001-02	REC688-45113-A0
80A/AE	1986+	3	REC688-11181-A1	REC688-W0001-02	REC688-45113-A0
85A/AE	1986+	3	REC688-11181-A1	REC688-W0001-02	REC688-45113-A0
90A/AE/TR	1986+	3	REC688-11181-A1	REC688-W0001-02	REC688-45113-A0
100A	1984+	4	REC6E5-11181-A0	REC6E5-W0001-A2	REC6E5-45113-A2
115A/B/E/C/C115T	1984+	4	REC6E5-11181-A0	REC6E5-W0001-A2	REC6E5-45113-A2
130B	1984+	4	REC6E5-11181-A0	REC6E5-W0001-A2	REC6E5-45113-A2
140A	1984+	4	REC6E5-11181-A0	REC6E5-W0001-A2	REC6E5-45113-A2
LZ150/VZ150/Z150	2004-05	6	REC68F-11181-00	REC68F-W0001-01	REC68F-45113-00
150A/E/C/FET	1984-10	6	REC6G5-11181-A2	REC6G5-W0001-A3	REC6G5-45113-A1
VZ175/Z175	2004-10	6	REC68F-11181-00	REC68F-W0001-01	REC68F-45113-00
175D/B/AET	1984-10	6	REC6G5-11181-A2	REC6G5-W0001-A3	REC6G5-45113-A1
LZ200/VZ200/Z200	2004-10	6	REC68F-11181-00	REC68F-W0001-01	REC68F-45113-00
200B/C/AET/GE/FET	1984+	6	REC6G5-11181-A2	REC6G5-W0001-A3	REC6G5-45113-A1
225D/BET/AET	1984+	6	REC6G5-11181-A2	REC6G5-W0001-A3	REC6G5-45113-A1
225C/G	1990+	6	REC61A-11181-A0	REC61A-W0001-01	REC61A-45113-A0
250A/E/B	1990-06	6	REC61A-11181-A0	REC61A-W0001-01	REC61A-45113-A0
Z-LZ250DET/TUR/TR	2003-07	6	REC60V-11181-00		REC60V-45113-02
250TR/FET/HETO	2003-07	6	REC60V-11181-00		REC60V-45113-02
V250TLR/TR	2003+	6	REC60V-11181-00		REC60V-45113-02
Z-LZ300	2004-07	6	REC6D0-11181-00	REC6D0-W0001-00	REC60V-45113-00

GUÍA JUNTAS MOTOR
ENGINE GASKET GUIDE
GUIDA GUARNIZIONE MOTORE

4 TIEMPOS STROKES

MODELO MODEL MODELLO	AÑO YEAR ANNO	CIL. CYL. CIL.	JUNTA CULATA GASKET CYL. HEAD GUARNIZIONE TESTATA	KIT JUNTAS SUP. MOTOR GASKET ENGINE KIT GUARN. PARTE ALTA MOTORE	JUNTA BASE MOTOR GASKET CYLINDER GUARN. PARTE BASSA MOTORE
F2.6A/M	2003+	1	PAF2.6-04000001		PAF2.6-00000003
F4A/M	1998+	1	PAF4-04000014		PAF4-00000006
F8A/B	1985-99	2	REC6G8-11181-A1	REC6G8-W0001-A3	REC6G8-11351-A0
F9.9A/B	1985-99	2	REC6G8-11181-A1	REC6G8-W0001-A3	REC6G8-11351-A0
F9.9C	2001-07	2	PAF15-07000100	REC66M-W0001-01	PAF15-00000014
F9.9H	2008+	2	REC6AG-11181-00		REC6AH-11351-00
FT9.9D, F13.5 A	2001-07	2	PAF15-07000100	REC66M-W0001-01	PAF15-00000014
F13.5B, F15C/E/M	2008+	2	REC6AG-11181-00		REC6AH-11351-00
F15A/E/M/P	2001-07	2	PAF15-07000100	REC66M-W0001-01	PAF15-00000014
F20B/E/M	2008+	2	REC6AG-11181-00		REC6AH-11351-00
F20D	2011+	2	REC6BL-11181-00		
F20A	1998+	2	PAF25-05040000	REC65W-W0001-00	PAF25-00000013
T25/F25A/A/E/M	1998-09	2	PAF25-05040000	REC65W-W0001-00	PAF25-00000013
T25/F25D/M/F	2009+	2	REC6BL-11181-00		
F30A/E/TR, F40B/E/TR	2000-09	3	REC67C-11181-01	REC67C-W0001-01	REC67C-11351-00
F30B, F40F	2009+	3	REC6BG-11181-00		
F40G, F70A	2011+	4	REC6CJ-11181-00		
F80A/B/C/TLR	1999+	4	REC67F-11181-03		REC68V-11351-00
F100A/B/D/TLR	1999+	4	REC67F-11181-03		REC68V-11351-00
F115A/TX/TLR	2000+	4	REC67F-11181-03		REC68V-11351-00
F150A/T/B	2004+	4	REC63P-11181-00		REC63P-11351-01
F17A	2014	4	REC6DA-11181-00		REC63P-11351-01
F200A/TX/TR/	2002-07	6	REC69J-11181-03 REC69J-11182-03		REC69J-11351-11
F200A/C, F225A/B/C	2007+	6	REC6P2-11181-00 REC6P2-11182-00		REC69J-11351-11
F200B/F/G/CA	2013+	4	REC6DA-11181-00		REC63P-11351-01
F225A/TR/TX/TUR	2002-07	6	REC69J-11181-03 REC69J-11182-03		REC69J-11351-11
F225CA/F, F250CA/D	2011+	6	REC6CB-11181-00		
F250A/B/T	2009+	6	REC6P2-11181-00 REC6P2-11182-00		REC69J-11351-11
F300A/TR, F350A/C/T	2008+	8	REC6AW-11181-00 REC6AW-11182-00		REC6AW-11351-00
F300B/CA	2011+	6	REC6CB-11181-00		

JUNTAS TAPA REFIRGERACIÓN
GASKETS, EXHAUST INNER COVER
GUARNIZIONE COPERCHIO REFRIGERAZIONE

Ref.	R.O.
REC6E0-41114-A1	6E0-41114-A1

MOTORES / ENGINES / MOTORI
4AC/AS/MSH
5C/CS

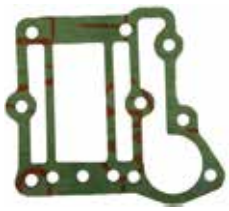

Ref.	R.O.
REC6E0-41112-A1	6E0-41112-A1

MOTORES / ENGINES / MOTORI
4AC/AS/MSH
5C/CS

Ref.	R.O.
REC6G1-41112-A1	66G1-41112-A1

MOTORES / ENGINES / MOTORI
6C/T/M/D
8C/M/T

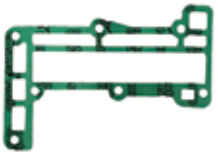

Ref.	R.O.
REC6G1-41114-A0	6G1-41114-A0

MOTORES / ENGINES / MOTORI
6C/T/M/D
8C/M/T

Ref.	R.O.
REC6G1-11193-A1	6G1-11193-A1

MOTORES / ENGINES / MOTORI
6C/M/T/D
8C/M/T

Ref.	R.O.
REC6G8-41112-02	6G8-41112-02

MOTORES / ENGINES / MOTORI
F8B
F9.9A/B
T9.9E

Ref.	R.O.
REC6G8-41114-00	6G8-41114-00

MOTORES / ENGINES / MOTORI
F8B
F9.9A/B
T9.9E

Ref.	R.O.
REC677-41112-A0	677-41112-A0

MOTORES / ENGINES / MOTORI
E8D/DMH

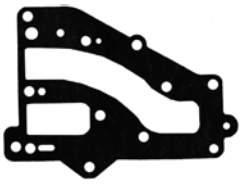

Ref.	R.O.
REC677-41114-A0	677-41114-A0

MOTORES / ENGINES / MOTORI
E8D/DMH

Ref.	R.O.
REC682-41114-00	682-41114-A1

MOTORES / ENGINES / MOTORI
9.9D
15D

Ref.	R.O.
REC682-41112-00	682-41112-A1

MOTORES / ENGINES / MOTORI
9.9D
15D

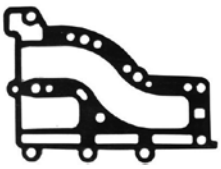

Ref.	R.O.
PAF15-07010018	66M-41114-01

MOTORES / ENGINES / MOTORI
F9.9
13.5
F15

Ref.	R.O.
REC63V-41112-A0	63V-41112-A0

MOTORES / ENGINES / MOTORI
9.9F/MSH/MH
13.5AW
15F/MSH/MH
E15DMH

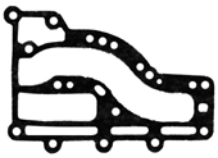

Ref.	R.O.
REC664-41114-A0	664-41114-A0

MOTORES / ENGINES / MOTORI
20C/25D

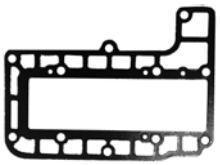

Ref.	R.O.
REC6L2-41114-A1	6L2-41114-A1

MOTORES / ENGINES / MOTORI
20D/M
25N/M/D

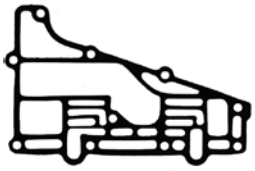

Ref.	R.O.
REC6L2-41112-A3	6L2-41112-A2

MOTORES / ENGINES / MOTORI
20D/M
25N/M

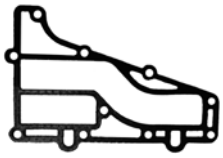

Ref.	R.O.
PAF25-05010111	65W-41114-00

MOTORES / ENGINES / MOTORI
F20/25
T25

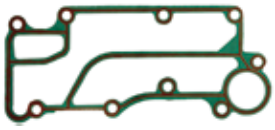

Ref.	R.O.
REC6H3-41112-A0	6H3-41112-A0

MOTORES / ENGINES / MOTORI
25B
50G/GE
60FE/TLR
E60H
70B/BE/TR

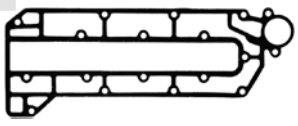

Ref.	R.O.
REC6H3-41114-A0	6H3-41114-A0

MOTORES / ENGINES / MOTORI
25B
50G/GE
60FE/TLR
E60H
70B/BE/TR

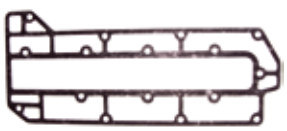

Ref.	R.O.
REC6H4-41112-A0	6H4-41112-A0

MOTORES / ENGINES / MOTORI
25QEO
40H/V/VE/TLR
C40M/T
50H/DE

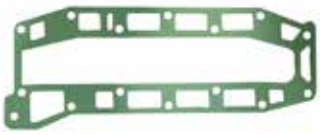

Ref.	R.O.
REC6H4-41114-A0	6H4-41114-A0

MOTORES / ENGINES / MOTORI
25QEO
40H/V/VE/TLR
C40M/T
50H/DE

Ref.	R.O.
REC6K8-41122-A1	6K8-41122-A1

MOTORES / ENGINES / MOTORI
25VE/M/B/BMH
E25A
30HM/HW/G/GE
E30HMH

Ref.	R.O.
REC6K8-41124-A1	6K8-41124-A1

MOTORES / ENGINES / MOTORI
25VE/M/B/BMH
E25A
30HM/HW/G/GE
E30HMH

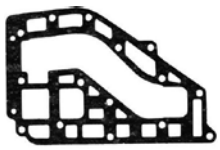

Ref.	R.O.
REC689-41112-A0	689-41112-A0

MOTORES / ENGINES / MOTORI
30A

Ref.	R.O.
REC689-41114-A0	689-41114-A0

MOTORES / ENGINES / MOTORI
30A

Ref.	R.O.
REC67C-41114-00	67C-41114-00

MOTORES / ENGINES / MOTORI
F30/40

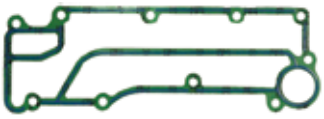

Ref.	R.O.
REC66T-41114-A0	66T-41114-A0

MOTORES / ENGINES / MOTORI
40X
E40X

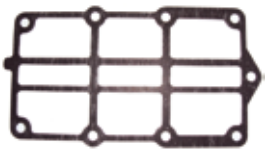

Ref.	R.O.
REC6F5-41112-A0	6F5-41112-A0

MOTORES / ENGINES / MOTORI
40GWH/JMH
E40GMH

Ref.	R.O.
REC6F5-41114-A0	6F5-41114-A0

MOTORES / ENGINES / MOTORI
40GWH/JMH
E40GMH

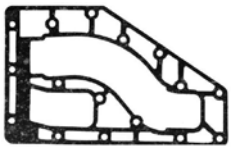

Ref.	R.O.
REC6E9-41114-A0	6E9-41114-A0

MOTORES / ENGINES / MOTORI
40Q

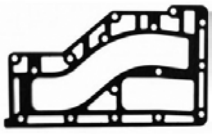

Ref.	R.O.
REC676-41112-A0	676-41112-A0

MOTORES / ENGINES / MOTORI
40Q

Ref.	R.O.
REC663-41114-00	663-41114-A0

MOTORES / ENGINES / MOTORI
55B
E55CMH

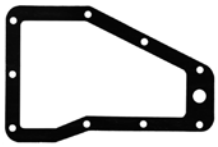

Ref.	R.O.
REC688-41112-A0	688-41112-A0

MOTORES / ENGINES / MOTORI
75CET/TLR/AE 85A/AE
E75B 90A/AE/TLR
80AE

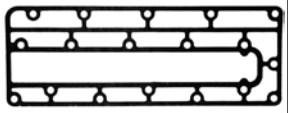

Ref.	R.O.
REC688-41114-A0	688-41114-A0

MOTORES / ENGINES / MOTORI
75CET/TLR/AE 85A/AE
E75B 90A/AE/TLR
80AE

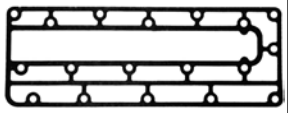

Ref.	R.O.
REC6E5-41112-A1	6E5-41112-A1

MOTORES / ENGINES / MOTORI
100A/AET/TLR
115B/BE/TLR/CEO/TXR
130BET/TLR

Ref.	R.O.
REC6G5-11382-A1	6G5-11382-A1

MOTORES / ENGINES / MOTORI
115HP-250HP

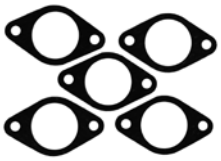

Ref.	R.O.
REC6G5-41112-A1	6G5-41112-A1

MOTORES / ENGINES / MOTORI
150F/FE/TXR/GE/A-CE,
175D/DE/FE
200AET/F/FE/TLR/G/GE/BE
225D/DE/BE

Ref.	R.O.
REC68F-41114-00	68F-41114-00

MOTORES / ENGINES / MOTORI
Z150 200HP
175

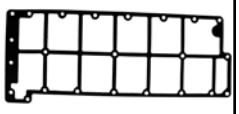

Ref.	R.O.
REC6G5-41114-A0	6G5-41114-A0

MOTORES / ENGINES / MOTORI
150F/FE/TXR/GE/A-CE,
175D/DE/FE
200AET/F/FE/TLR/G/GE/BE
225D/DE/BE

JUNTAS SISTEMA ADMISIÓN
GASKETS, INTAKE
GUARNIZIONE SISTEMA ASPIRAZIONE

Ref.	R.O.
REC69J-13645-00	69J-13645-A1

MOTORES / ENGINES / MOTORI
F200/FL-LF200 (02-11)
F225/LF-FL225 (02-11)

Ref.	R.O.
REC69J-15451-00	69J-15451-A1

MOTORES / ENGINES / MOTORI
F200/FL-LF200 (02-11)
F225/LF-FL225 (02-11)

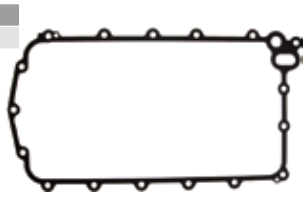

Ref.	R.O.
REC6G1-13645-A1	6G1-13645-A1

MOTORES / ENGINES / MOTORI
6D/DMH/CMH//MH/C/TRV
8C/CMH/MH/MSH

Ref.	R.O.
REC6G1-14198-A1	6G1-14198-A1

MOTORES / ENGINES / MOTORI
6D/DMH/CMH//MH/C/TRV
8C/CMH/MH/MSH

Ref.	R.O.
REC6G1-13621-A1	6G1-13621-A1

MOTORES / ENGINES / MOTORI
6D/DMH/CMH//MH/C/TRV
8C/CMH/MH/MSH

Ref.	R.O.
REC6G8-14198-A0	6G8-14198-00

MOTORES / ENGINES / MOTORI
F8BE/BM/B
F9.9B/BE/BM/A/AM

Ref.	R.O.
REC6G8-13645-00	6G8-13645-00

MOTORES / ENGINES / MOTORI
F8BE/BM/B
F9.9B/BE/BM/A/AM

Ref.	R.O.
REC6G8-13646-A0	6G8-13646-00

MOTORES / ENGINES / MOTORI
F8BE/BM/B
F9.9B/BE/BM/A/AM

Ref.	R.O.
REC6G8-15374-00	6G8-15374-00

MOTORES / ENGINES / MOTORI
F8BE/BM/B
F9.9B/BE/BM/A/AM

Ref.	R.O.
REC677-24434-02	677-24434-02

MOTORES / ENGINES / MOTORI
E8D/DMH
9.9D/15D
25D/NH/NMH/MH/NE/NEMO
20DMH/MLH/DW

Ref.	R.O.
REC682-13621-00	682-13621-A0

MOTORES / ENGINES / MOTORI
9.9D
15D

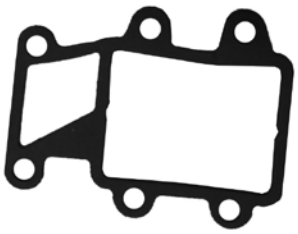

Ref.	R.O.
REC648-13645-A0	648-13645-A0

MOTORES / ENGINES / MOTORI
20CM/C
25DE/BMH/B/D/V
30A/HM/HW/G/GE, E30HMH

Ref.	R.O.
REC677-13621-00	677-13621-A1

MOTORES / ENGINES / MOTORI
20CM/C
25DE/BMH/B/D/V
30A/HM/HW/G/GE
E30HMH

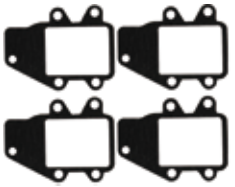

Ref.	R.O.
REC677-14198-A1	677-14198-A1

MOTORES / ENGINES / MOTORI
20CM/C
25DE/BMH/B/D/V
30A/HM/HW/G/GE
E30HMH

Ref.	R.O.
REC648-14198-A0	648-14198-A0

MOTORES / ENGINES / MOTORI
20C/CM
25D/DE
30A

Ref.	R.O.
REC648-13621-A0	648-13621-A1

MOTORES / ENGINES / MOTORI
20CM/C
25DE/BMH/B/D/V
30A/HM/HW/G/GE
E30HMH

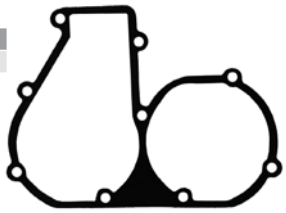

Ref.	R.O.
REC6H4-14198-01	6H4-14198-01

MOTORES / ENGINES / MOTORI
25Q/QEO/B C40T/40YET
50D/G/GEO/GET/H 60FEO/FET/D
40V/VM/TLR/H 70B/BE

Ref.	R.O.
REC61N-14198-00	61N-14198-00

MOTORES / ENGINES / MOTORI
25VE/VM/B/BMH/BWH
E25A/BMH
30G/GE/HMH/HW
E30HMH

Ref.	R.O.
REC6H3-13621-A1	6H3-13621-A1

MOTORES / ENGINES / MOTORI
25B
50G/GEO/GETO,
60FEO/FETO/TLR/TRZ/F
E60H/E60M
70BEO/B/BE/
BEDO/BETO/TR

Ref.	R.O.
REC6H4-14198-09	6H4-14198-00

MOTORES / ENGINES / MOTORI
40N/H/E
50D/ETN

Ref.	R.O.
REC676-13646-A0	676-13646-A0

MOTORES / ENGINES / MOTORI
40QE/QM/QWC

Ref.	R.O.
REC688-14483-A0	688-14483-A0

MOTORES / ENGINES / MOTORI
E40CMH E55CMH
55B/BE/BET

Ref.	R.O.
REC6F5-13645-A0	6F5-13645-A1

MOTORES / ENGINES / MOTORI
40GWH/JWH
E40GMH/JMH

Ref.	R.O.
REC6F5-13621-A1	6F5-13621-A1

MOTORES / ENGINES / MOTORI
40GWH/JWH
E40GMH/JMH

Ref.	R.O.
REC6F5-13646-A2	6F5-13646-A1

MOTORES / ENGINES / MOTORI
40GWH/JWH
E40GMH/JMH

Ref.	R.O.
REC6F5-14198-A1	6F5-14198-A1

MOTORES / ENGINES / MOTORI
40GWH/JWH
E40GMH/JMH

Ref.	R.O.
REC6E9-14198-A0	6E9-14198-A0

MOTORES / ENGINES / MOTORI
40QE/QM/QWC

Ref.	R.O.
REC663-14483-A0	663-14483-A0

MOTORES / ENGINES / MOTORI
E40CMH E55CMH
55B/BE/BET

Ref.	R.O.
REC663-14198-00	663-14198-A0

MOTORES / ENGINES / MOTORI
E48CMHS
55BET/B/BE/BM

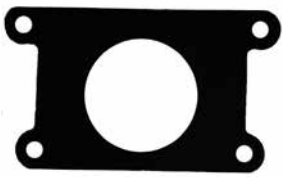

Ref.	R.O.
REC663-13621-00	663-13621-A0

MOTORES / ENGINES / MOTORI
E48CMHS
55BET/B/BE/BM

Ref.	R.O.
REC6H3-14198-A1	6H3-14198-A1

MOTORES / ENGINES / MOTORI
25B
50G/GEO/GETO
60FEO/FETO/TLR/TRZ/F
E60H/E60M
70BEO/B/BE/
BEDO/BETO/TR

Ref.	R.O.
REC6H3-13622-A1	6H3-13622-A1

MOTORES / ENGINES / MOTORI
25B
50G/GEO/GETO
60FEO/FETO/TLR/TRZ/F
E60H/E60M
70BEO/B/BE/BEDO/BETO/TR

Ref.	R.O.
REC688-14416-01	688-14416-01

MOTORES / ENGINES / MOTORI
75AET/AEM/AED
E75B
85A/AE/AET/AED

YAMAHA

RECAMBIOS MARINOS S.L.

Ref.	R.O.
REC688-13621-A1	688-13621-A1

MOTORES / ENGINES / MOTORI
75AET/AEM/AED
E75B
85A/AE/AET/AED

Ref.	R.O.
REC6E5-13645-A1-00	6E5-13645-A1

MOTORES / ENGINES / MOTORI
100A/TLR
115BE/B/CETO/TXR
130BETO/TLR
150F/FETO/TXR/TR/
GETO/A/AETO
175DETO/D/FETO
225DET/D

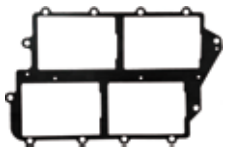

Ref.	R.O.
REC6E5-14198-A2	6E5-14198-A2

MOTORES / ENGINES / MOTORI
100A/TLR
115BE/B/CETO/TXR
130BETO/TLR
150F/FETO/TXR/TR/
GETO/A/AETO
175DETO/D/FETO
225DET/D

Ref.	R.O.
REC6E5-13621-A1	6E5-13621-A1

MOTORES / ENGINES / MOTORI
100A/TLR
115BE/B/CETO/TXR
130BETO/TLR
150F/FETO/TXR/TR/
GETO/A/AETO
175DETO/D/FETO
225DET/D

Ref.	R.O.
REC6E5-14416-A1	6E5-14416-A1

MOTORES / ENGINES / MOTORI
115B/BE/BET
C115TLR

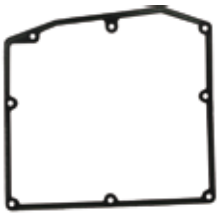

Ref.	R.O.
REC6E5-14483-A1	6E5-14483-A1

MOTORES / ENGINES / MOTORI
115B/BE/BET
C115TLR

Ref.	R.O.
REC6E5-11381-A1	6E5-11381-A1

MOTORES / ENGINES / MOTORI
115BET/CEO
130BET
150CET
175BET
200CETO
225BET

Ref.	R.O.
REC65L-13646-00	65L-13646-00

MOTORES / ENGINES / MOTORI
150PETO/QETO/TXR
175GETO
200N/NETO/PET/TLR
225G/GET

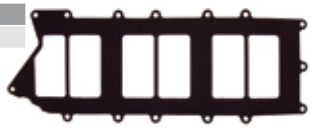

Ref.	R.O.
REC65L-13645-00	65L-13645-00

MOTORES / ENGINES / MOTORI
150PETO/QETO/TXR
175GETO
200N/NETO/PET/TLR
225G/GET

Ref.	R.O.
REC6G5-14416-A1	6G5-14416-A1

MOTORES / ENGINES / MOTORI
150A-AET

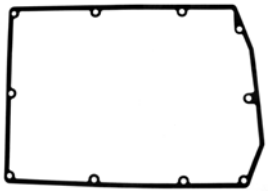

Ref.	R.O.
REC64E-13645-A0	64E-13645-A0

MOTORES / ENGINES / MOTORI
150GETO
D150H 175DET
200GETO/G
225D/DET

Ref.	R.O.
REC61A-13621-A0	61A-13621-A0

MOTORES / ENGINES / MOTORI
Z150P/Q/TLR
175G/GET
200NETO/N/TR/PET
250G/GET/B

Ref.	R.O.
REC6G5-14483-01	6G5-14483-A1

MOTORES / ENGINES / MOTORI
150A/AETO
175AE/AETO
200AET/AETO

Ref.	R.O.
REC688-14198-A1	688-14198-A2

MOTORES / ENGINES / MOTORI
Z150P/Q/TLR
175G/GET
200NETO/N/TR/PET
250G/GET/B

Ref.	R.O.
REC68F-11381-00	68F-11381-00

MOTORES / ENGINES / MOTORI
Z150
VZ150
LZ150
Z175
VZ175
Z200
VZ200
LZ200

Ref.	R.O.
REC6G5-13645-A1	6G5-13645-A2

MOTORES / ENGINES / MOTORI
150A/AETO
175AE/AETO
200AET/AETO

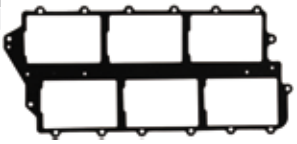

Ref.	R.O.
REC6K7-13645-A2	6K7-13645-A2

MOTORES / ENGINES / MOTORI
200CETO
225BET

Ref.	R.O.
REC6K7-13646-A2	6K7-13646-A2

MOTORES / ENGINES / MOTORI
200CETO
225BET

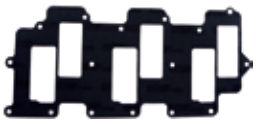

Ref.	R.O.
REC61A-11381-A0	61A-11381-A0

MOTORES / ENGINES / MOTORI
225C/CET/FET/G/GET
250AET/B

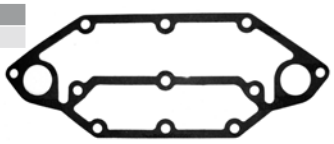

Ref.	R.O.
REC61A-13645-00	61A-13645-00

MOTORES / ENGINES / MOTORI
225C/CET
250AET/B/A/ETD

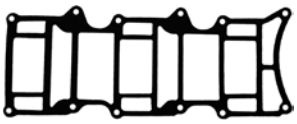

Ref.	R.O.
REC61A-13646-00	61A-13646-00

MOTORES / ENGINES / MOTORI
225C/CET
250AET/B/A/ETD

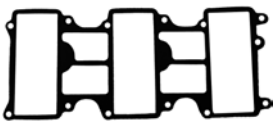

Ref.	R.O.
REC60V-13621-A0	60V-13621-A0

MOTORES / ENGINES / MOTORI
Z300AETO/TR
Z250DETO/TR/FETO
LZ250 (2003-07)
LZ300 (2004-07)
VZ200 (2005-09)
VZ225 (2003-09)
VZ300 (2004-09)
VZ250 (2003-07)
Z300 (2004-07)

Ref.	R.O.
REC60V-13645-00	60V-13645-00

MOTORES / ENGINES / MOTORI
Z300AETO/TR
Z250DETO/TR/FETO
LZ250 (2003-07)
LZ300 (2004-07)
VZ200 (2005-09)
VZ225 (2003-09)
VZ300 (2004-09)
VZ250 (2003-07)
Z300 (2004-07)

JUNTAS CULATÍN
GASKETS, HEAD COVER
GUARNIZIONI TESTATA

Ref.	R.O.
REC6L2-11193-A1	6L2-11193-A1

MOTORES / ENGINES / MOTORI
20D/DM/DEO
25NE/NEMO/NWC/
MSH

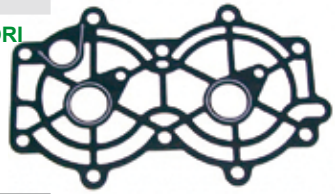

Ref.	R.O.
REC61T-11193-A0	61T-11193-A1

MOTORES / ENGINES / MOTORI
25VE/VM/BMH/B
E25A/BMH
30G/GE/HMH/HW
MSH

Ref.	R.O.
REC6H3-11193-A1	6H3-11193-A1

MOTORES / ENGINES / MOTORI
25B/BETO
50G/GEO/GETO
60FEO/FETO/FEDO/TLR
E60H/
HMH/MLH
70B//BEO/BEMO/BETO/TR

Ref.	R.O.
REC66T-11193-A0	66T-11193-A0

MOTORES / ENGINES / MOTORI
40X/E40X
E40 MLH/X/XW

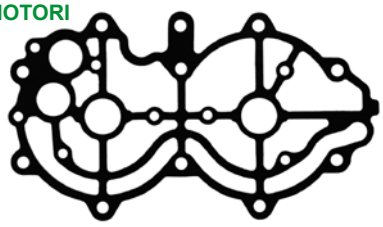

Ref.	R.O.
REC6E9-11193-A0	6E9-11193-A0

MOTORES / ENGINES / MOTORI
40QE/QE-Z/QM/QWC

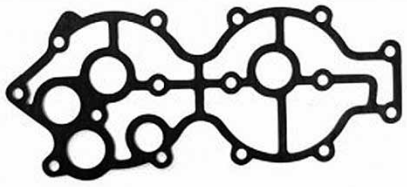

Ref.	R.O.
REC6F6-11193-A1	6F6-11193-A1

MOTORES / ENGINES / MOTORI
40GWH/JWH
E40GMH/JMH

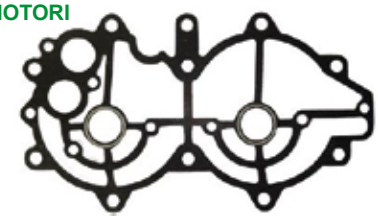

Ref.	R.O.
REC663-11193-00	663-11193-A0

MOTORES / ENGINES / MOTORI
E48CMH
55BET/B/BE/BM/BET
E55CMH

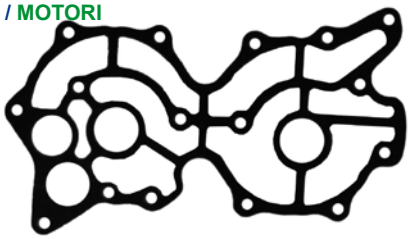

Ref.	R.O.
REC688-11193-A1	688-11193-A1

MOTORES / ENGINES / MOTORI
75CETO/TLR/AE
E75B
80AEO/AETO/A
85A/AE
90AEO/TLR/A/AETO

Ref.	R.O.
REC6E5-11193-A0	6E5-11193-A0

MOTORES / ENGINES / MOTORI
100A/AETO/TLR
115B/BETO/BE
C115TLR/CEO/CETO/TXR
E115AEL
130BETO

Ref.	R.O.
REC68F-11193-02	68F-11193-02

MOTORES / ENGINES / MOTORI
Z150P/TXR/PETO/TR/Q/QETO
Z175G/GETO/TR/TXR/H
Z200N/TXR/PETO/TLR/NETO

Ref.	R.O.
REC6G5-11193-A0	6G5-11193-A1

MOTORES / ENGINES / MOTORI
150A/AET/CETO/F/FETO/TXR
D150H
175D/DETO/BETO
200AET/CETO/FETO/G/GETO/BETO/TXR/F/TLR.
225D/DET/BET

Ref.	R.O.
REC61A-11193-A2	61A-11193-A2

MOTORES / ENGINES / MOTORI
225C/CETO/G/GETO
250AET/B/TXR

JUNTAS COLECTOR Y CARTER
GASKETS, UPPERCASING, OIL PAN, MANIFOLD
GUARNIZIONI COLLETTORE E CARTER

Ref.	R.O.
REC646-14623-A1	646-14623-A1

MOTORES / ENGINES / MOTORI
2B

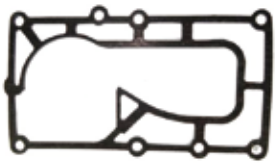

Ref.	R.O.
PAF2.6-04000004	69M-11351-A0

MOTORES / ENGINES / MOTORI
F2.5

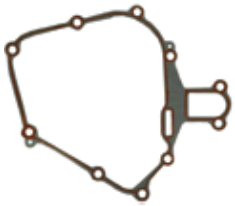

Ref.	R.O.
PAF4-04000002	68D-11351-A0

MOTORES / ENGINES / MOTORI
F4

Ref.	R.O.
REC68T-13475-00	68T-13475-00

MOTORES / ENGINES / MOTORI
F6/8/9.9
T8/9.9

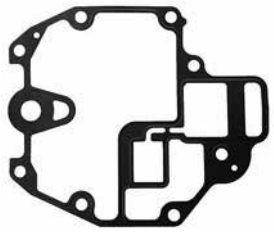

Ref.	R.O.
REC6G8-45113-A1	6G8-45113-A1

MOTORES / ENGINES / MOTORI
F8/9.9
T9.9

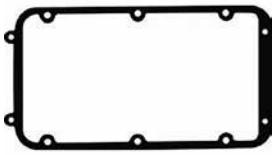

Ref.	R.O.
REC6AH-13329-00	6AH-13329-00

MOTORES / ENGINES / MOTORI
F9.9/13.5/15/20

Ref.	R.O.
REC682-45113-A0	682-45113-02

MOTORES / ENGINES / MOTORI
9.9D
15D

Ref.	R.O.
REC6AH-15312-00	6AH-15312-00

MOTORES / ENGINES / MOTORI
F9.9/13.5/15/20

Ref.	R.O.
PAF15-00000005	66M-45113-00

MOTORES / ENGINES / MOTORI
F15/9.9/13.5
FT9.9

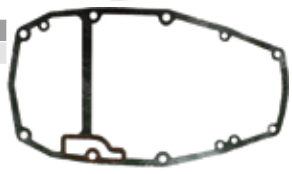

Ref.	R.O.
REC62Y-15312-00	62Y-15312-00

MOTORES / ENGINES / MOTORI
F20/25/40/45/50
T50

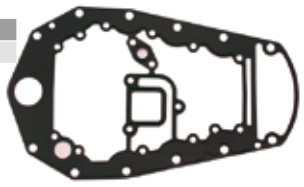

Ref.	R.O.
REC67C-15312-00	67C-15312-00

MOTORES / ENGINES / MOTORI
F25/30/40
T25

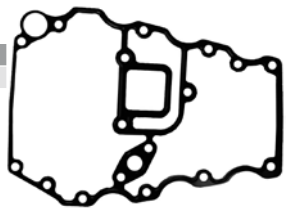

Ref.	R.O.
REC67C-45113-00	67C-45113-00

MOTORES / ENGINES / MOTORI
F25/30/40
T25

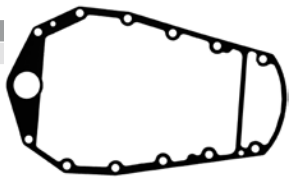

Ref.	R.O.
REC6H3-45114-A1	6H3-45114-A1

MOTORES / ENGINES / MOTORI
25B/BETO
50G/GEO/GETO
60FEDO/TLR/BEO
E60H/MLHHMH
70B/BEO
70BETO/TR

Ref.	R.O.
PAF25-02010007	67C-15312-00

MOTORES / ENGINES / MOTORI
F25/30/40
T25

Ref.	R.O.
REC676-45114-A1	676-45114-A1

MOTORES / ENGINES / MOTORI
40QE/QE-Z/QM/QWC/GWH/JWH
E40GMH/JMH

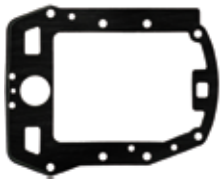

Ref.	R.O.
REC66T-45114-A0	66T-45114-A0

MOTORES / ENGINES / MOTORI
40X/XMH/XW
E40X/MLH/XMH

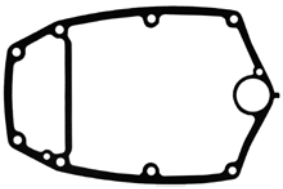

Ref.	R.O.
REC697-45114-00	697-45114-A0

MOTORES / ENGINES / MOTORI
E48CMH
55BET/B/BE/BM
E55CMH

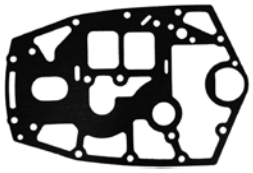

Ref.	R.O.
REC63D-45114-A0	63D-45114-A0

MOTORES / ENGINES / MOTORI
50H/HR/HM
40V/ VM/VETO/C40MLH
C40T/TLR
40YETO

Ref.	R.O.
REC688-45114-A1	688-45114-A1

MOTORES / ENGINES / MOTORI
75A/AE/CETO/TLR/AED
E75B
85A/AED-M-T
80A/AE/AEO
90A/ETN/AEO/AETO

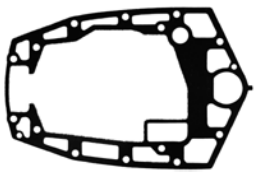

Ref.	R.O.
REC67F-45113-00	67F-45113-00

MOTORES / ENGINES / MOTORI
F75/80/100/115

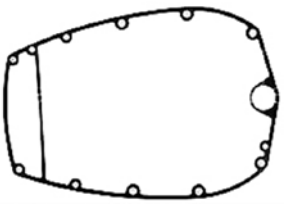

Ref.	R.O.
REC68V-15312-00	68V-15312-00

MOTORES / ENGINES / MOTORI
F80/100/115

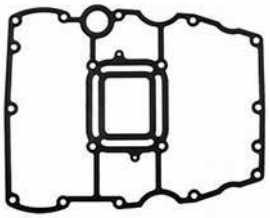

Ref.	R.O.
REC6G5-45114-A0	6G5-45114-A1

MOTORES / ENGINES / MOTORI
115A/B/ETN/BETO
130BETO
140AETO/BETO
150ETN/AETO/CETO/
FETO
Z150
Z175
175AETO
200ETN/AET-0
Z200
225AETO/DET

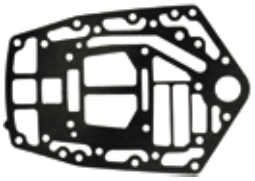

JUNTAS ESCAPE
EXHAUST GASKET
GUARNIZIONI SCARICO

Ref.	R.O.
REC6G5-45114-A0	6G5-45114-A1

MOTORES / ENGINES / MOTORI
115A/B/ETN/BETO
130BETO
140AETO/BETO
150ETN/AETO/CETO/FETO
Z150
Z175
175AETO
200ETN/AET-0
Z200
225AETO/DET

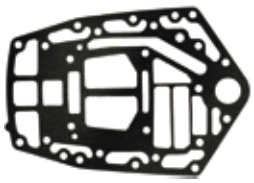

Ref.	R.O.
REC6E5-45114-00	6E5-45114-A0

MOTORES / ENGINES / MOTORI
115A/ETN
E115AEL
140AETO

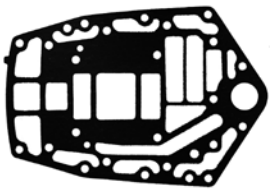

Ref.	R.O.
REC63P-15312-00	63P-15312-00

MOTORES / ENGINES / MOTORI
F150/175/200

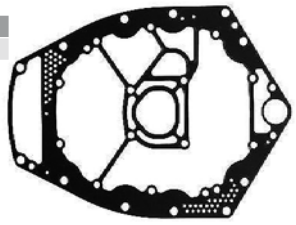

Ref.	R.O.
REC61A-41134-A0	6D0-41134-00

MOTORES / ENGINES / MOTORI
225C/FETO/G/GETO
Z250
250B/AET/BETO/TXR
Z300/AETO/TR

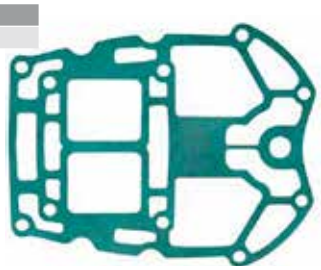

Ref.	R.O.
REC6AW-45113-00	6AW-45113-00

MOTORES / ENGINES / MOTORI
F300/350

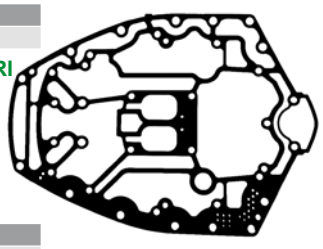

Ref.	R.O.
REC6AW-14613-00	6AW-14613-00

MOTORES / ENGINES / MOTORI
FL/F300-350 (2008-2011)

Ref.	R.O.
REC6AW-14623-00	6AW-14623-00

MOTORES / ENGINES / MOTORI
FL/F300-350 (2008-2011)

Ref.	R.O.
REC6AW-15312-00	6AW-15312-00

MOTORES / ENGINES / MOTORI
FL/F300-350 (2008+)

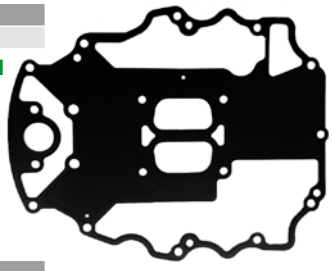

Ref.	R.O.
REC6AW-15451-00	6AW-15451-00

MOTORES / ENGINES / MOTORI
FL/F300-350 (2008+)

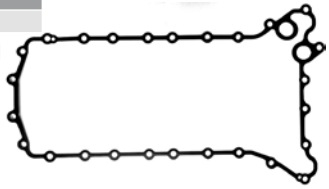

Ref.	R.O.
REC6G1-41133-A0	6G1-41133-A0

MOTORES / ENGINES / MOTORI
6C/CEM/D/DEM/TRV/MSH/MHS/CWH/DMH/J
8CEM/C/TRV/MSH/MH/CMH/J/N

Ref.	R.O.
PAF15-04010004	66M-41138-00

MOTORES / ENGINES / MOTORI
F9.9/15/13.5
T9.9

Ref.	R.O.
PAF15-03000003	66M-45115-00

MOTORES / ENGINES / MOTORI
F9.9/13.5/15
T9.9

Ref.	R.O.
REC682-41133-A0	682-41133-A0

MOTORES / ENGINES / MOTORI
9.9D
E9.9DMH
15D
E15DMH

Ref.	R.O.
REC63V-41133-A1	63V-41133-A1

MOTORES / ENGINES / MOTORI
9.9F/FEM/FMH/MH/AW/MSH
13.5AWH

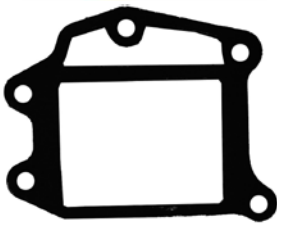

Ref.	R.O.
REC6L2-41133-A3	6L2-41133-A3

MOTORES / ENGINES / MOTORI
20D/DEM/DEO/MLH/DMH
25NE/NW/MLH/N/MSH/MH/MLH

Ref.	R.O.
PAF25-05080004	65W-14457-10

MOTORES / ENGINES / MOTORI
F20/25
T25

Ref.	R.O.
REC6L2-41134-00	6L2-41134-00

MOTORES / ENGINES / MOTORI
20D/DEM/DEO/MLH/DMH
25NE/NW/MLH/N/MSH/MH/MLH

Ref.	R.O.
REC62Y-45127-00	62Y-45127-00

MOTORES / ENGINES / MOTORI
F20/25/40/45/50
T50

YAMAHA

RECAMBIOS MARINOS S.L.

Ref.	R.O.
REC67C-41133-00	67C-41133-00

MOTORES / ENGINES / MOTORI
F20/25/40/50/30
T25

Ref.	R.O.
REC62Y-41133-00	62Y-4113-00

MOTORES / ENGINES / MOTORI
F20/25/40/45/50
T50

Ref.	R.O.
REC663-45123-00	663-45123-00

MOTORES / ENGINES / MOTORI
25QEO
40H/N
F40/45/50
50ETN
T50
55B
E55CM

Ref.	R.O.
REC664-41134-A0	664-41134-A0

MOTORES / ENGINES / MOTORI
20C/CM/A/G/GE
E25A/25VE/VM/DE/D

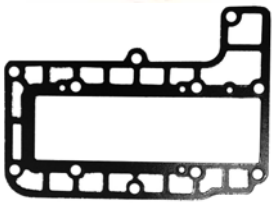

Ref.	R.O.
REC63D-45123-00	63D-45123-00

MOTORES / ENGINES / MOTORI
25AEO/50H/40V/YE
C40M/40TLR/50DE

Ref.	R.O.
REC67C-45123-00	67C-45123-00

MOTORES / ENGINES / MOTORI
F20/25/40/50/30
T25

Ref.	R.O.
REC6H3-45127-00	6H3-45127-00

MOTORES / ENGINES / MOTORI
25B/BETO
50G/GEO/GETO
60FE/FET/FEO/FETO/FEDO
E60H/MHZ/MLH/HMH/HW

Ref.	R.O.
REC6H3-45123-00	6H3-45123-00

MOTORES / ENGINES / MOTORI
25B/BETO
50G/GEO/GETO
60FE/FET/FEO/FETO/FEDO
E60H/MHZ/MLH/HMH/HW
70B/ETN/
BEH/BEO/BEMO/BETO/CE

Ref.	R.O.
REC6H4-41134-A0	6H4-41134-A0

MOTORES / ENGINES / MOTORI
25QEO/50H/40V/YE
C40M/40TLR/50DE

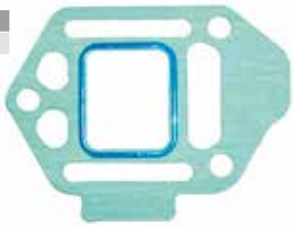

Ref.	R.O.
REC66T-41133-A1	66T-41133-A0

MOTORES / ENGINES / MOTORI
40X/XW/XMH
E40X/MLN

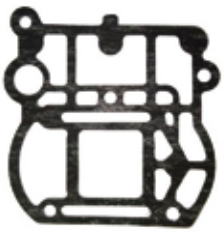

Ref.	R.O.
REC676-41133-A0	676-41133-A0

MOTORES / ENGINES / MOTORI
40QE/QE-Z/QM/QWC

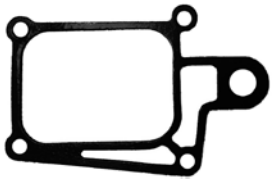

Ref.	R.O.
REC676-45128-00	676-45128-00

MOTORES / ENGINES / MOTORI
40QE/QE-Z/QM/QWC

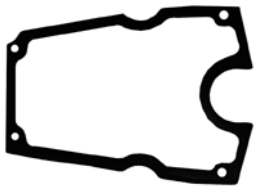

Ref.	R.O.
REC676-45127-00	676-45127-00

MOTORES / ENGINES / MOTORI
40QE/QE-Z/QM/QWC

Ref.	R.O.
REC688-41134-00	688-41134-A0

MOTORES / ENGINES / MOTORI
75A/AE/AED/CETO/TLR
80A/AEO
85A/AED-T
90A/AET/AEO

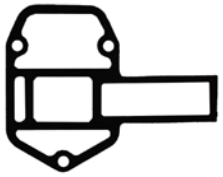

Ref.	R.O.
REC67F-45123-00	67F-45123-00

MOTORES / ENGINES / MOTORI
F75/80/100

Ref.	R.O.
REC688-45123-00	688-45123-00

MOTORES / ENGINES / MOTORI
75CETO/TLR
E75B/AED
80A/AE/TLR
85A/AE
90A/AE/TLR/TR

Ref.	R.O.
REC67F-41138-00	67F-41138-00

MOTORES / ENGINES / MOTORI
F80/100/115

Ref.	R.O.
REC67F-45127-00	67F-45127-00

MOTORES / ENGINES / MOTORI
F80/100/115

Ref.	R.O.
REC68V-45123-00	

MOTORES / ENGINES / MOTORI
F80/100/115

Ref.	R.O.
REC67F-41134-A0	67F-41134-A0

MOTORES / ENGINES / MOTORI
F80/100/115

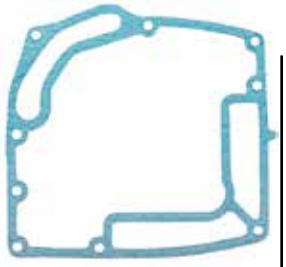

Ref.	R.O.
REC6E5-44315-A0	6E5-44315-A0

MOTORES / ENGINES / MOTORI
F100/200
150FETO
175DETO/D
200FETO/TXR/F
225/C/CETO
Z250
250AET/B

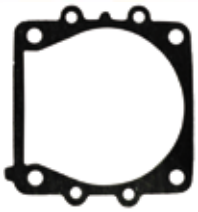

Ref.	R.O.
REC6E5-41135-A0	6E5-41135-A0

MOTORES / ENGINES / MOTORI
100A/AET/TLR
115B/BETO/CEO/CETO/TXR
130BETO

Ref.	R.O.
REC6E5-41134-A0	6E5-41134-A0

MOTORES / ENGINES / MOTORI
100A/AET/TLR
115B/BETO/CEO/CETO/TXR, 130BETO

Ref.	R.O.
REC6G5-41134-A1	6G5-41134-A1

MOTORES / ENGINES / MOTORI
130BETO
150FETO/PETO/TR
175DETO/GETO/TR
Z200
200AET/ FETO/NETO/ TXR
225DET

Ref.	R.O.
REC69J-41138-00	69J-41138-00

MOTORES / ENGINES / MOTORI
F200/225/250

Ref.	R.O.
REC69J-45123-00	69J-45123-00

MOTORES / ENGINES / MOTORI
F200/225/250

Ref.	R.O.
REC69J-41135-A0	69J-41135-A0

MOTORES / ENGINES / MOTORI
F200/225/250

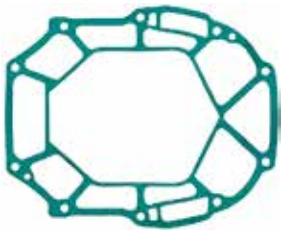

Ref.	R.O.
REC6S1-41136-00	6S1-41136-00

MOTORES / ENGINES / MOTORI
F200/225/250

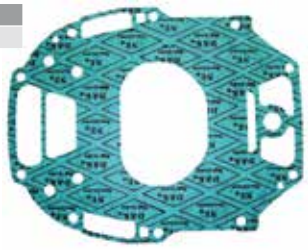

Ref.	R.O.
REC69J-41134-A0	69J-41134-A0

MOTORES / ENGINES / MOTORI
F200/225

Ref.	R.O.
REC6AW-41134-01	6AW-41134-00

MOTORES / ENGINES / MOTORI
FL/F300-350 (2008+)

CARBURADORES
CARBURETOR
CARBURATORI

Ref.	R.O.
PAF2.6-04000200	69M-14301-21

MOTORES / ENGINES / MOTORI
F2.5 ALL (2003+)

Ref.	R.O.
PAF4-04140000	67D-14301-03

MOTORES / ENGINES / MOTORI
F4 (1998-05)

Ref.	R.O.	
PAF15-07090000	66M-14301-00	Arranque manual
		Manual starter
		Messa in moto manuale
PAF15-07090000W	66M-14301-00	Arranque eléctrico
		Electric starter
		Messa in moto elettrica

MOTORES / ENGINES / MOTORI
F9.9, F13.5, F15 (1998-07)

Ref.	R.O.
PAF25-05070000	65W-14901-12

MOTORES / ENGINES / MOTORI
F25 ALL (1999-06)

VARILLA ACELERADOR
ROD ACCELERATOR LEVER
ASTA ACCELLERATORE

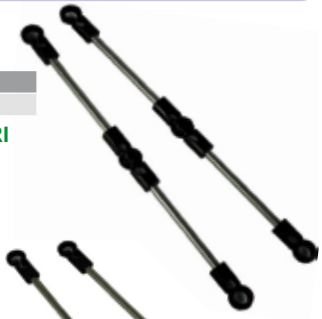

Ref.	R.O.
REC6H3-41217-00	6H3-41217-00

MOTORES / ENGINES / MOTORI
50G/E60H
60F/T
70B/T

Ref.	R.O.
REC688-41217-00	688-41217-00

MOTORES / ENGINES / MOTORI
80A
90A/E

Ref.	R.O.
REC692-41256-00	692-41256-00

MOTORES / ENGINES / MOTORI
75A/B 85A
80A 90A

Ref.	R.O.
REC6G5-41217-00	6G5-41217-01

MOTORES / ENGINES / MOTORI
150/200ETN 175AET-O
150/200AETO 225AETO

JUNTAS CARBURADOR
CARBURATOR GASKET
GUARNIZIONI CARBURATORE

Ref.	R.O.
REC677-14384-01	677-14384-01

MOTORES / ENGINES / MOTORI
E8D/DMH
9.9D
15D

Ref.	R.O.
REC677-14227-00	677-14227-01

MOTORES / ENGINES / MOTORI
E8D/DMH
9.9D
15D

Ref.	R.O.
REC6E7-14227-00	6E7-14227-00

MOTORES / ENGINES / MOTORI
9.9D
15D

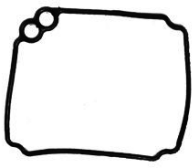

Ref.	R.O.
REC63V-14984-00	63V-14984-00

MOTORES / ENGINES / MOTORI
9.9F/FM/FEM/MS/MH/E9.9DMH
13.5AW
15F/FEM/MSH/FMH/MH
E15DMH

Ref.	R.O.
REC63V-14126-00	63V-14126-00

MOTORES / ENGINES / MOTORI
9.9F/FM/FEM/MS/MH/E9.9DMH
13.5AW
15F/FEM/MSH/FMH/MH
E15DMH

Ref.	R.O.
REC6L2-14399-00	6L2-14399-00

MOTORES / ENGINES / MOTORI
20DM/D/DEO/MLH
E25A
25VE/VM/B/BMH/BWH/HMH/NMH/NE/N/MLH/D
30G/GE
E30HMH

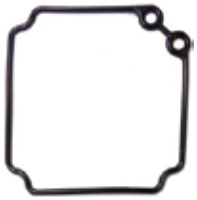

Ref.	R.O.
REC6L2-14384-00-00	6L2-14384-00

MOTORES / ENGINES / MOTORI
20DM/D/DEO/MLH
E25A
25VE/VM/B/BMH/BWH/HMH/NMH/NE/N/MLH/D
30G/GE
E30HMH

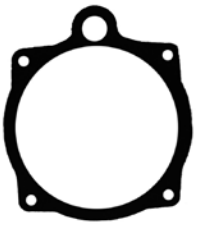

Ref.	R.O.
REC648-14384-01-00	648-14384-01

MOTORES / ENGINES / MOTORI
20C/CM
25D/DE
30A

Ref.	R.O.
REC6H3-14457-01	6H3-14457-01

MOTORES / ENGINES / MOTORI
25Q E60H
40V/TLR/H 60F/TR
C40T 70B
50G/H

Ref.	R.O.
REC66T-14384-01	66T-14384-01

MOTORES / ENGINES / MOTORI
E40XM/X/MLH/XW
40XW/XM

Ref.	R.O.
REC6F5-14384-00	6F5-14384-00

MOTORES / ENGINES / MOTORI
E40GMH/JMH
40GWH/JWH

Ref.	R.O.
REC66T-14536-00	66T-14536-01

MOTORES / ENGINES / MOTORI
40X/E40X/E40M

Ref.	R.O.
REC6F5-14398-00	6F5-14398-00

MOTORES / ENGINES / MOTORI
E40GMH/JMH
40GWH/JWH

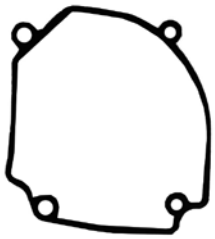

Ref.	R.O.
REC676-14984-00-00	676-14984-00

MOTORES / ENGINES / MOTORI
75A/AE/AET/AEM
E75B
85A/AE/AET/AED

Ref.	R.O.
REC6E5-14384-03-00	6E5-14384-03

MOTORES / ENGINES / MOTORI
100A/AETO/TLR
115A/B/BE/CE/BETO
130BETO
140AETO
150CET/ETD/AETO/CETO
175AETO/BETO/ET
200ETD
200CETO/AET/BET
225BET/AET

Ref.	R.O.
REC64D-14384-1	64D-14384-01

MOTORES / ENGINES / MOTORI
175D/DET
150F/FET/TXR/AET
200AET/TLR/F/FET
225D/DET
115B/CET/TXR/TLR
130BET
250G/GET

KITS CARBURADOR
CARBURATOR KITS
KIT CARBURATORE

Ref.	R.O.
REC6A1-W0093-01	6A1-W0093-01

MOTORES / ENGINES / MOTORI
2B (1985-1988)

Ref.	R.O.
REC6G1-W0093-00	6G1-W0093-00

MOTORES / ENGINES / MOTORI
3A/AMH//MSH/ (1988-07)
6C/CEM/N/J (1984-96)
8C/CEM/N/J (1984-96)

Ref.	R.O.
REC67D-W0093-00	67D-W0093-00

MOTORES / ENGINES / MOTORI
F4 (1999-02)
F4A/AMH/MSH (1998-02)

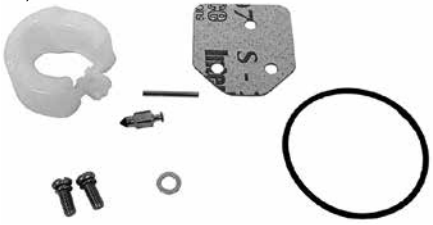

Ref.	R.O.
REC66M-W0093-01	66M-W0093-01

MOTORES / ENGINES / MOTORI
F9.9C/FT9.9D (1998-08)
F15A/ELH/MHZ/PL (1998-07)

Ref.	R.O.
REC63V-W0093-00	63V-W0093-00

MOTORES / ENGINES / MOTORI
9.9MH/FMH (1995-12)
E9.9
13.5AMH (2003-04)
15FMH/MH (1995-12)
E15DMH (2003)

Ref.	R.O.
REC677-W0093-00	677-W0093-00

MOTORES / ENGINES / MOTORI
9.9D (1985)
15D(1985)

Ref.	R.O.
REC6E7-W0093-01	6E7-W0093-04

MOTORES / ENGINES / MOTORI
9.9D (1990-93)
15D (1990-93)

Ref.	R.O.
REC6L2-W0093-00	6L2-W0093-00

MOTORES / ENGINES / MOTORI
20D/M (1998-11)
25N/M (1988-14)

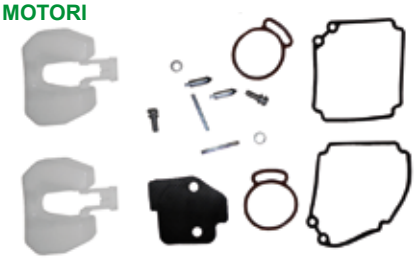

Ref.	R.O.
REC689-W0093-02	689-W0093-02

MOTORES / ENGINES / MOTORI
20C/CM (1992-02)
25D/DE (1992-01)
30A (1992)

Ref.	R.O.
REC6H4-W0093-03	6H4-W0093-03

MOTORES / ENGINES / MOTORI
25QEO (1993-1994)
40V/VM/VE (1995-14)
C40T/TL (1995-02)
40YET (2005-07)
50H/HR/HM/HW/HE (1995-03)

Ref.	R.O.
REC6H2-W0093-10	6H2-W0093-10

MOTORES / ENGINES / MOTORI
25B/BETO (1994-1995)
50G/GE (1993-1998)
60FE/TL/TR (1992-2007)
70B/BE (1992-2014)

Ref.	R.O.
REC6H4-W0093-01-00	6H4-W0093-01

MOTORES / ENGINES / MOTORI
40H/E (1985-88)
50D (1985-88)

Ref.	R.O.
REC66T-W0093-01	66T-W0093-01

MOTORES / ENGINES / MOTORI
40XMH/XW (2000-13)
E40X/MLH/XMH (2000-13)

Ref.	R.O.
REC61N-W0093-00	61N-W0093-00

MOTORES / ENGINES / MOTORI
25VE/VM (1996-01)
25B/BMH/BW (2001-10)
E30HMH (2003)
30G/GE (1996-00)
30HMH/HW (2003-12)

Ref.	R.O.
REC6E9-W0093-02	6E9-W0093-02

MOTORES / ENGINES / MOTORI
40G/QE/QE-2/QM (1992-99)

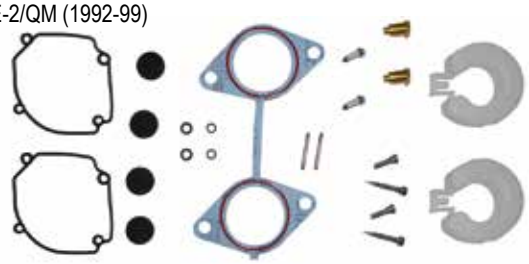

Ref.	R.O.
REC6F6-W0093-00	6F6-W0093-00

MOTORES / ENGINES / MOTORI
E40 (2003)

Ref.	R.O.
REC6E9-W0093-03	6E9-W0093-03

MOTORES / ENGINES / MOTORI
40QEZ/QWC (1997-98)
C40 2Cyl (1995-98)

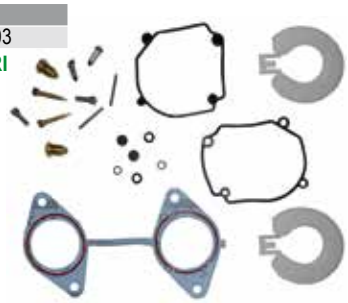

Ref.	R.O.
REC696-W0093-00	696-W0093-02

MOTORES / ENGINES / MOTORI
E48CMH (2003)
55B/BE/BM (1992-02)
E55CMH (2003-05)

Contiene para dos carburadores
For two carburetors
Contenuto per due carburatori

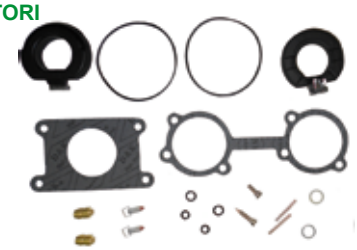

Ref.	R.O.
REC6H1-W0093-01-00	6H1-W0093-01

MOTORES / ENGINES / MOTORI
60FE-T/FEO (1985-91)
70B/BEH/CEL (1985-90)

Ref.	R.O.
REC6H3-W0093-02	6H3-W0093-02

MOTORES / ENGINES / MOTORI
E60H/MHZ/MLH/HMHD/HW/HEHM (1997-14)

Ref.	R.O.
REC6H0-W0093-00	6H0-W0093-00

MOTORES / ENGINES / MOTORI
C80 (1997)

Ref.	R.O.
REC6H1-W0093-10	6H1-W0093-10

MOTORES / ENGINES / MOTORI
75CET (1998-2014)
75TLR (2000-02)
80A (2000-02)
90AE/TR/TL (1992-14)

Ref.	R.O.
REC67F-W0093-00	

MOTORES / ENGINES / MOTORI
F80A/TLR/ (1999-2001)
F100A/TLR/TRZ/TLR (1999-2001)

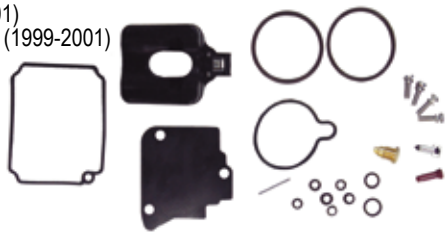

Ref.	R.O.
REC6E5-W0093-07	6E5-W0093-07

MOTORES / ENGINES / MOTORI
115BE/B (1996-2002)
115C/CET (2007-13)
130B/9BET (2007)

Ref.	R.O.
REC6N6-W0093-02	6N6-W0093-02

MOTORES / ENGINES / MOTORI
115BETO/CETO (1990-91)
L/130 BETO (1990-91)

Ref.	R.O.
REC6E5-W0093-08	6E5-W0093-08

MOTORES / ENGINES / MOTORI
115 BE (1997)

Ref.	R.O.
REC6E5-W0093-06	6E5-W0093-06

MOTORES / ENGINES / MOTORI
115B/BETO/CEO/CETO (1992-1995)
130BETO (1993-1995)
L150CETO (1992-1995)
175BETO (1992-95)
200BETO (1992-95)
200CETO (1992-93)
225BETO (1993-95)

Ref.	R.O.
REC64D-W0093-00	64D-W0093-00

MOTORES / ENGINES / MOTORI
150A/AET/GET/FET/F (1996-00)
175DET/FET (1996-00)
200F/FET/G/GET (1996-00)
225D/DET (1996-97)

Ref.	R.O.
REC6K7-W0093-09	6K7-W0093-09

MOTORES / ENGINES / MOTORI
225AET (1987-91)
PROV200 (1991)
150CET (1990-91)
175 BETO (1990-91)
200BET/ET (1990-91)
225BET(1990-91)

Ref.	R.O.
REC61A-W0093-01	61A-W0093-01

MOTORES / ENGINES / MOTORI
225C/CET (1994-95)
250B (1995-02)
250A/AET (1992-06)

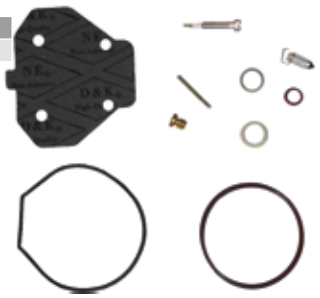

AGUJA CARBURADOR
NEEDLE VALVE
SPILLO CONICO CARBURATORE

Ref.	R.O.
REC61N-14392-00	62Y-14392-00

MOTORES / ENGINES / MOTORI
2.5>60HP

Ref.	R.O.
REC6G1-14546-00	6G1-14546-01

MOTORES / ENGINES / MOTORI
8>40HP

Ref.	R.O.
REC626-14390-90	626-14390-90

MOTORES / ENGINES / MOTORI
9.9D/15D

Ref.	R.O.
REC677-14343-68	677-14343-68

MOTORES / ENGINES / MOTORI
9.9D/15D

Ref.	R.O.
REC6E8-14390-12	6E8-14390-12

MOTORES / ENGINES / MOTORI
9.9-15HP
E8D/9.9D/15D

Ref.	R.O.
REC6E5-14546-00	6E5-14546-00

MOTORES / ENGINES / MOTORI
25-250HP

Ref.	R.O.
REC6F5-14390-21	6F5-14390-21

MOTORES / ENGINES / MOTORI
40G/E40G
40J/E40J

Ref.	R.O.
REC6F6-14341-00	6F6-14341-00

MOTORES / ENGINES / MOTORI
40G/40J
E40G/E40J

Ref.	R.O.
REC696-14590-01	696-14590-01

MOTORES / ENGINES / MOTORI
48-55HP
E48CMH
E55CMH

Ref.	R.O.
REC6H3-14590-00	6H3-14590-01

MOTORES / ENGINES / MOTORI
E60/60FE/TR
70BET/TR

Ref.	R.O.
REC688-14947-00	688-14947-00

MOTORES / ENGINES / MOTORI
75A/AE
85A/AE

RECAMBIOS MARINOS S.L.

VALVULA DE LÁMINAS
VALVE OF SHEETS
VALVOLA

Ref.	R.O.
REC6F6-13610-00	6F6-13610-00

MOTORES / ENGINES / MOTORI
40G/E40G
40J/E40J

TORNILLOS CARBURADOR
BOLT SCREW
VITE CARBURATORE

Ref.	R.O.
REC624-42542-00	90387-06119

MOTORES / ENGINES / MOTORI
3>300HP

Ref.	R.O.
REC647-14323-00	647-14323-00

MOTORES / ENGINES / MOTORI

E8D	5C
4A/MS	15D
9.9D	25D
20C	30A

Ref.	R.O.
REC679-14923-00	679-14923-00

MOTORES / ENGINES / MOTORI

9.9F/M	13.5 AM
E9.9D	8N/C/J
15F/M	6C/D/TR/M
E15D	3A

Ref.	R.O.
REC6A0-14325-00	6A0-14325-00

MOTORES / ENGINES / MOTORI
15>300HP

Ref.	R.O.
REC50M-14355-00	50M-14355-00

MOTORES / ENGINES / MOTORI
20>50HP

Ref.	R.O.
REC66T-14992-00	66T-14992-00

MOTORES / ENGINES / MOTORI
40X/E40X/E40M

Ref.	R.O.
REC6F5-14323-00	6F5-14323-01

MOTORES / ENGINES / MOTORI
E40G/E40J
40G/40J

Ref.	R.O.
REC692-14923-00	692-14923-00

MOTORES / ENGINES / MOTORI
40>90HP

Ref.	R.O.
REC663-14923-00	663-14923-00

MOTORES / ENGINES / MOTORI
E48C
55B
E55CMH

Ref.	R.O.
REC6E5-14328-01	6E5-14328-01

MOTORES / ENGINES / MOTORI
115>225HP

Ref.	R.O.
REC64D-14394-00	64D-14394-00

MOTORES / ENGINES / MOTORI
115-225HP

Ref.	R.O.
REC6E5-14323-03	6E5-14323-03

MOTORES / ENGINES / MOTORI
115>250

BOYAS
FLOATS
GALLEGGIANTI

Ref.	R.O.
REC6G1-14985-00	647-14323-00

MOTORES / ENGINES / MOTORI

3A/M	70B
E60	40N-H
8C-M/T	50E-D
60F	6C/M/D

Ref.	R.O.
REC647-14385-00	647-14385-00

MOTORES / ENGINES / MOTORI

4AC	9.9D
5C	15D

Ref.	R.O.
REC6E7-14385-00	6E7-14385-00

MOTORES / ENGINES / MOTORI

4AC	9.9D
5C	15D
E8D	

Ref.	R.O.
REC676-14966-00	679-14966-00

MOTORES / ENGINES / MOTORI
8>100HP

Ref.	R.O.
REC63V-14985-00	63V-14985-00

MOTORES / ENGINES / MOTORI

9.9F-M	F25
13.5A	F30
15F-M	F40
F20	

Ref.	R.O.
REC6L2-14385-00	6L2-14385-00

MOTORES / ENGINES / MOTORI
13.5>60HP

Ref.	R.O.
REC648-14385-00	648-14385-00

MOTORES / ENGINES / MOTORI
20C
25D
30A

Ref.	R.O.
REC6F6-14385-00	6F6-14385-00

MOTORES / ENGINES / MOTORI
40G/J
E40G/J

Ref.	R.O.
REC676-14985-01	676-14985-01

MOTORES / ENGINES / MOTORI

40Q	80A
75A	85A
E75B	90A/E

Ref.	R.O.
REC6E5-14385-02	6E5-14385-02

MOTORES / ENGINES / MOTORI

40X
E40
100A
115C
115A-B
130B
150F/A
175D/A
200A
200G/F/B
225D
225A
250G

PASADOR BOYA
PIN FLOAT
SPINOTTO GALLEGGIANTE

Ref.	R.O.
REC688-14548-00	688-14548-00

MOTORES / ENGINES / MOTORI

3>90HP

Ref.	R.O.
REC676-14186-00	676-14186-00

MOTORES / ENGINES / MOTORI

3>100HP

Ref.	R.O.
REC647-14386-10	647-14386-10

MOTORES / ENGINES / MOTORI

4AC/M/AS
FT/F9.9A/B
5C/CM/CS
T9.9EL
9.9D
F8AM/BM
15D

Ref.	R.O.
PAF25-05070019	6H4-14548-00

MOTORES / ENGINES / MOTORI

9.9>100HP

Ref.	R.O.
REC6E5-14386-01	6E5-14386-01

MOTORES / ENGINES / MOTORI

9.9>200HP

Ref.	R.O.
REC663-14548-00	663-14548-00

MOTORES / ENGINES / MOTORI

E48C
55B
E55CMH

Ref.	R.O.
REC6E5-14386-02	6E5-14386-02

MOTORES / ENGINES / MOTORI

115>200HP

CABLE ACELERADOR Y COMPLEMENTOS
THROTTLE CABLE & COMPLEMENT
CAVO ACCELLERATORE E COMPONENTI

Ref.	R.O.
REC6E0-26301-01	6E0-26301-01

MOTORES / ENGINES / MOTORI

4AC/A/AS
5C/CS/CMH

Ref.	R.O.
REC677-26301-02	677-26301-02

MOTORES / ENGINES / MOTORI

E8D
E8DMH

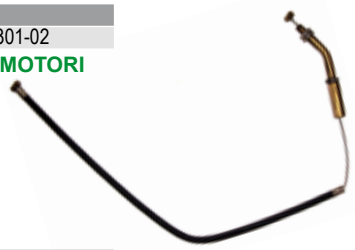

Ref.	R.O.
REC6L2-26301-00	6L2-26301-00

MOTORES / ENGINES / MOTORI

9.9F/FM
13.5AM
15F/FM
20D/M
25N/NE/NW/D/M

Ref.	R.O.
REC6B4-26301-00	6B4-26301-00

MOTORES / ENGINES / MOTORI

E15D
E9.9D

Ref.	R.O.
REC61N-26311-00	61N-26311-00

MOTORES / ENGINES / MOTORI

25B/BM/V
30G/E30H

Ref.	R.O.
REC6F5-26311-00	6F5-26311-00

MOTORES / ENGINES / MOTORI

E40G/J
40G/J

Ref.	R.O.
REC66T-26301-00	66T-26301-00

MOTORES / ENGINES / MOTORI

40X/E40X

Ref.	R.O.
REC663-42138-00	663-42138-00

MOTORES / ENGINES / MOTORI

55B/BET
E55
E60
75A5
85AE

Ref.	R.O.
REC663-48344-00	663-48344-00

MOTORES / ENGINES / MOTORI

6>115HP

BOMBA COMBUSTIBLE
FUEL PUMP
POMPA BENZINA

Ref.	R.O.
REC6E5-24410-03	6E5-24410-01-00

MOTORES / ENGINES / MOTORI
V4
V6 (1989-03)

Ref.	R.O.
PAF4-04090000	67D-24410-03

MOTORES / ENGINES / MOTORI
F4

Ref.	R.O.
PAF15-07140000	66M-24410-11

MOTORES / ENGINES / MOTORI
F9.9/13.5/15

Ref.	R.O.
REC692-24410-00	692-24410-00, 6A0-24410-00/05/03/04

MOTORES / ENGINES / MOTORI
25-85HP

Ref.	R.O.
PAF25-05130000	62Y-24410-04

MOTORES / ENGINES / MOTORI
F20/25//30/40/45/50/60

Ref.	R.O.
REC68F-13907-01	68F-13907-01

MOTORES / ENGINES / MOTORI
VZ, Z150 (2000-07)
VZ, Z175 (2001-07)
V, L, Z200 (2000-07)

Ref.	R.O.
REC66K-13907-00	66K-13907-00

MOTORES / ENGINES / MOTORI
225G (1999-01)
250B
SX250 TXR (2000-01)

Ref.	R.O.
REC60V-13907-00	60V-13907-00

MOTORES / ENGINES / MOTORI
Z, LZ 250 (2003-07)
Z, LZ 300 (2003-07)

Ref.	R.O.
REC68V-13907-00	68V-13907-03

MOTORES / ENGINES / MOTORI
Z, LZ 250DET/TR/FET (2003-07)
Z, LZ 300AET/TR/TX (2004-07)

Ref.	R.O.
REC67H-13907-00	67H-13907-00

MOTORES / ENGINES / MOTORI
225G/GETOL/FETO (2003)
250B/BETO/TXRA (2003)

MEMBRANAS BOMBA COMBUSTIBLE
FUEL PUMP DIAPHRAGMS
MEMBRANA POMPA BENZINA

Ref.	R.O.
REC6G1-24411-00	6G1-24411-00

MOTORES / ENGINES / MOTORI
3-15HP

Ref.	R.O.
REC6E0-24411-00	6E0-24411-00

MOTORES / ENGINES / MOTORI
4C/5C/AC

Ref.	R.O.
REC6E0-24471-00	6E0-24471-00

MOTORES / ENGINES / MOTORI
4HP

Ref.	R.O.
REC6G1-24471-00	6G1-24471-00

MOTORES / ENGINES / MOTORI
6-8HP

Ref.	R.O.
REC677-24471-01	677-24471-01

MOTORES / ENGINES / MOTORI
E8D/9.9D/15D

Ref.	R.O.
REC63V-24411-00	63V-24411-00

MOTORES / ENGINES / MOTORI
9.9
13.5
15HP

Ref.	R.O.
REC677-24411-02	677-24411-02

MOTORES / ENGINES / MOTORI
9.9>15HP

Ref.	R.O.
REC648-24411-00	648-24411-00

MOTORES / ENGINES / MOTORI
20>70HP

Ref.	R.O.
REC692-24411-00	692-24411-00

MOTORES / ENGINES / MOTORI
20>90HP

Ref.	R.O.
PAF25-05130005	62Y-24471-00

MOTORES / ENGINES / MOTORI
F25>F80HP

Ref.	R.O.
REC663-24411-00	663-24411-00

MOTORES / ENGINES / MOTORI
25>90HP

Ref.	R.O.
REC6J8-24471-00	6J8-24471-00

MOTORES / ENGINES / MOTORI
30HP

Ref.	R.O.
REC6E5-24411-00	6E5-24411-00-00

MOTORES / ENGINES / MOTORI
115/150/175/200HP

Ref.	R.O.
REC6E5-24471-00	6E5-24471-00

MOTORES / ENGINES / MOTORI
115>250HP

JUNTAS BOMBA COMBUSTIBLE
FUEL PUMP GASKETS
GUARNIZIONI POMPA BENZINA

Ref.	R.O.
REC6G1-24431-01	6G1-24431-01

MOTORES / ENGINES / MOTORI
3A/MSH
6C/CEM/D/DEM/TRV/MSH/CMH
8C/CEM/TRV/MSH/CMH/MH
9.9F
13.5AWH
15F

Ref.	R.O.
REC6E0-24434-00	6G1-24431-01

MOTORES / ENGINES / MOTORI
4AC/MSH/AS/A
5C/CS/CMH

Ref.	R.O.
REC6E0-24435-00	6E0-24435-00

MOTORES / ENGINES / MOTORI
4AC/MSH/AS/A
5C/CS/CMH

Ref.	R.O.
REC677-24435-01	677-24435-01

MOTORES / ENGINES / MOTORI
9.9D
15D
20DM/DEO
25NE/NEMO

Ref.	R.O.
REC648-24434-01	648-24434-01

MOTORES / ENGINES / MOTORI
20C/CM
25Q/D/B/BMH
25V/VE
E30HMH
30G/H
40V/VM/VE/YE
C40
E40
E40X
40X
50G/GEO/GETO/H/D
55B/BE
60FEO/FETO/TLR
E60H
70B/BETO
75CETO/AE
E75B
80A/AE
85A/AE
90A/AEO/AET

Ref.	R.O.
REC648-24435-02	648-24435-02

MOTORES / ENGINES / MOTORI
20C/CM
25Q/D/B/BMH
25V/VE
E30HMH
30G/H
40V/VM/VE/YE
C40
E40
E40X
40X
50G/GEO/GETO/H/D
55B/BE
60FEO/FETO/TLR
E60H
70B/BETO
75CETO/AE
E75B
80A/AE
85A/AE
90A/AEO/AET

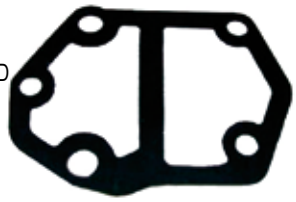

Ref.	R.O.
REC650-24431-A0	650-24431-A0

MOTORES / ENGINES / MOTORI
25-300HP

Ref.	R.O.
REC6E5-24435-00	6E5-24435-00

MOTORES / ENGINES / MOTORI
100A/TLR
115A/ETN/BET/B/
BICET/TLR
130BETO
140AETO
150AETO/ETN/FETO
175AETO/DETO/BETO
200AETO/ETN
V200/G/BETO
220AET
225DET/BETO
250AET
Z300

Ref.	R.O.
REC6E5-24434-02	6E5-24434-02

MOTORES / ENGINES / MOTORI
100A/TLR
115A/ETN/BET/B/
BICET/TLR
130BETO
140AETO
150AETO/ETN/FETO
175AETO/DETO/BETO
200AETO/ETN
V200/G/BETO
220AET
225DET/BETO
250AET
Z300

TERMOSTATO
THERMOSTAT
TERMOSTATO

Ref.	R.O.
PAT15-04000010	69M-12411-01-00

MOTORES / ENGINES / MOTORI
F2.5MSH-0405
F2.5MSH-0406
F2.5MSH-0407
F2.5MSH-0408
F2.5MSH-0408
F2.5MSH-2005

Ref.	R.O.
REC6E5-12411-02	6E5-12411-02

MOTORES / ENGINES / MOTORI
8MSH-(0405)
8MSH-(046)
8MSH-(0407)
8MSH-(2006-08)
8MSHD-(2000-05)

Ref.	R.O.
GLM13010	6F5-12411-03

MOTORES / ENGINES / MOTORI
9.9EL
9.9ES
15EL
15ES (1986-95)
9.9L
9.9S
15L
15S (1986-90)
9.9M
15ML
C55EL 1991-95)
C25EL
C40EL (1991-97)
C25ML (1993-97)
C25MS
C40MS
C40PL (1992-97)
C30EL (1991-92)
CV30EL (1989-90)
C40ML (1994-95)
C55TL (1993-95)
CV25EL
CV25EM
CV40EL (1990)
CV55EL (1989)

Ref.	R.O.
REC6E5-12411-30	6E5-12411-30

MOTORES / ENGINES / MOTORI

9.9-15 (1996-06)
20 (1996-97)
25 (1988-95)
30, 3-cyl (1987-91)
40 (1986-05)
C40 3cyl (1998-02)
50 (1986-05)
C50 (1998-01)
P50 (1987-96)
115(1984-05)
B115 (1998-99)
C115 (1991-00)
P115(1993-96)
S115/S130 (1996-98)
130L/130 (1988-05)
150/175/200 (1986-05)
C150 (1996-99)
D150/DX150 (1997-05)
L150/L200 (1986-99)
LX150/LX200 (1999-01)
P150 (1986-99)
PX150 (1999)
SX150/SX200 (1999-04)
V150 (2000-05)
VX150 (2000-05)
VZ150/VZ175/VZ200 (2001-05)
Z150/Z175/Z200 (2000-05)
P200 (1991-93)
V200/V225 (1998-99)
VX200/VX225 (2000-05)
V6 Special (1984-86)
V6 Excel (1987-89)
225 2.6L (1990-97)
S225/L225 3.1L (1994-99)
SX225/LX225 3.1L (2000-02)
250/L250 2.6L (1990-95)
S250/L250 3.1L (1996-99)
SX250/LX250 3.1L (2000-02)
VX250 3.1L (2002-04)

Ref.	R.O.
PAF15-07000031	66M-12411-01

MOTORES / ENGINES / MOTORI

15 (2006)
F15 (1998-06)
F25 (1999-06)
F30 (2001-06)
F40 (1999-06)
F50 (1996-06)
F60 (2002-06)
F9.9 (2005-06)
T25 (2001-06)
T50 (1996-06)
T60 (2003-06)
T9.9 (2005-06)

Ref.	R.O.
REC688-12411-10	688-12411-11

MOTORES / ENGINES / MOTORI

25JEO/J/ESH
30DETO/DMH/MLH/DEO/ELH
75CETO/TLR/AE/E75B
80AEO/AET/AEM
85A/AE
90AET/TLRC/AEO

Ref.	R.O.
REC6H3-12411-10	6H3-12411-11

MOTORES / ENGINES / MOTORI

60TLR-(0402)
70TLR-(0405)
70TLR-(0406)
70TLR-(0407)
70TLR-(0408)

Ref.	R.O.
REC67F-12411-01	67F-12411-01

MOTORES / ENGINES / MOTORI

F75BET/TR/TLR
F80CED/BET
F100BET/AET
F150AET/TLR/TR/BET
F200AET/TXR/C/CET
F225AET/TR/TXR/BET/CET
F250BET/AET/TXR/TVR

Ref.	R.O.
REC60V-12411-00	60V-12411-00

MOTORES / ENGINES / MOTORI

Z-LZ250DETO/TR/TXR
ZV250FETO (2003-07)
F115AET/TR/TJR/TRG/A (2015+)
300Z/LZ/AETO/
TR/TXR (2004-07)

JUNTAS TERMOSTATO
THERMOSTAT GASKET
GUARNIZIONI TERMOSTATO

Ref.	R.O.
PAF4-04000011	68D-E2414-A0

MOTORES / ENGINES / MOTORI

F2.5
F4
F5
F6

Ref.	R.O.
REC6G8-12414-A0	6G8-12414-A0

MOTORES / ENGINES / MOTORI

T8/T9.9
F6/8/9.9
FT8/9.9

Ref.	R.O.
PAF15-07010022	62Y-12414-00

MOTORES / ENGINES / MOTORI

F9.9
F60
F30
F13.5
F70
FT9.9
T9.9TLR
FT25
FT50
FT60
F15/20/25/40/45/50
T50TLR
T60TLR
T25TLR

Ref.	R.O.
REC682-12414-A1	682-12414-A1

MOTORES / ENGINES / MOTORI

9.9D/F/FMH/FEMH/MH/MSH
15D
E9.9DMH
13.5AMH
15F/FEMH/FMH/MSH/MH
E15DMH

Ref.	R.O.
REC61A-12414-A0	61A-12414-A0

MOTORES / ENGINES / MOTORI

20DM/MSH
25J/JETO/NEM/NWC/D/DM
30D/DMH
40V/VMH/VEO
C40MLH/T
50H/HM
225C/CET/FETO/G
250AET/B/TXR/G/GETO

Ref.	R.O.
REC655-12414-A1	655-12414-A1

MOTORES / ENGINES / MOTORI

20C/CM
E25A
E25BMH
25VE/VM/DE/D/B/BMH/BWH/HMH
30G/GE/A
E30HMH
30HMH/HWH/HWL

Ref.	R.O.
REC676-12414-A0	676-12414-A1

MOTORES / ENGINES / MOTORI

40X/E40X/E40MLH

Ref.	R.O.
REC6E9-12414-A1	6E9-12414-A1

MOTORES / ENGINES / MOTORI

40QE/QM/QEZ/QWC/GWH/JWH
E40GMH/JMH

Ref.	R.O.
REC663-12414-00	663-12414-A0

MOTORES / ENGINES / MOTORI
E48CMHS
55B/BET/BE/BM
E55CMH

Ref.	R.O.
REC688-12414-A1	688-12414-A1

MOTORES / ENGINES / MOTORI
75CETO/AE
E75B
80AE/A
85AE/A
90AE/TLR
100A/TLR
115BE/B
115A/AETO/CET
130BETO/TLR
150F/TXRA/FETO/C
Z150
175D/DETO/DETO
Z175
225D/DETO
VZ200
Z200
200AET/CETO/F/
FETO/G/GETO

COLAS COMPLETAS
COMPLETE GEARCASE ASSEMBLY
PIEDI COMPLETI

Ref.	R.O.	Cola completa Complete gearcase Piedi completi	Reducción Gear ratio Riduzione
PAF2.6-03020000S	69M-65300-01-4D	17"	2.08
PAF2.6-03020000L	69M-65300-11-4D	22"	2.08

MOTORES / ENGINES / MOTORI
F2.5 (2003+)

4 TIEMPOS STROKES

Ref.	R.O.	Cola completa Complete gearcase Piedi completi	Reducción Gear ratio Riduzione
PAF4-0310000S	68D-65300-03-4D	17.1"	2.08
PAF4-0310000L	68D-65300-11-4D	22.1"	2.08

MOTORES / ENGINES / MOTORI
F4 (1998-2009)

4 TIEMPOS STROKES

Ref.	R.O.	Cola completa Complete gearcase Piedi completi	Reducción Gear ratio Riduzione
PAF15-06100000S	66M-45300-02-4D	17.3"	2.08
PAF15-06100000L	66M-45300-11-4D	22.3"	2.08

MOTORES / ENGINES / MOTORI
F9.9 (1998-2008)
F13.5 (2002-2007)
F15 (1998-2007)

4 TIEMPOS STROKES

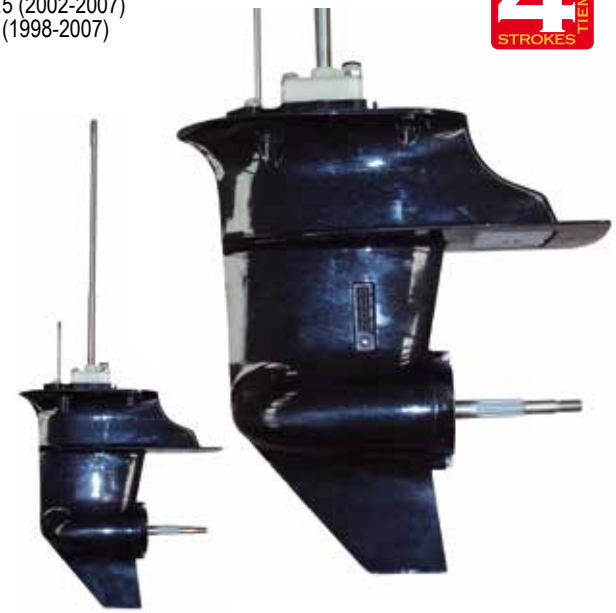

Ref.	R.O.	Cola completa Complete gearcase Piedi completi	Reducción Gear ratio Riduzione
PAF25-04090000S	65W-45300-01-4D	16.6"	2.08
PAF25-04090000L	65W-45300-01-4D	21.6"	2.08

MOTORES / ENGINES / MOTORI
F20 (1998-2003)
F25 (1998+)

4 TIEMPOS STROKES

Ref.	R.O.	Cola completa Complete gearcase Piedi completi	Reducción Gear ratio Riduzione
REC405-A20	6E5-45300-17-8D	20" V4	2.0:1
REC405-A25	6E5-45300-27-8D	25" V4	2.0:1

MOTORES / ENGINES / MOTORI
115HP (1984+)
130HP (1987+)

Ref.	R.O.	Cola completa Complete gearcase Piedi completi		Reducción Gear ratio Riduzione
REC416-A20	64D-45300-01-8D	20" V6 90° 2.6L		1.86:1
REC416-A25	64D-45300-21-8D	25" V6 90° 2.6L		1.86:1
REC418-A25	64P-45300-10-8D	25" V6 90° 2.6L	Contrarotación/ Counterrotation / Controrotante	1.86:1

MOTORES / ENGINES / MOTORI
150HP (1984+)
175HP (1984+)
200HP (1984+)
225HP (1990+)

Ref.	R.O.	Cola completa Complete gearcase Piedi completi		Reducción Gear ratio Riduzione
REC421-A20	66K-45300-12-NA	20" V6 76° 3.1L / 3.2 L		1.81
REC421-A25	60V-45300-20-8D	25" V6 76°		1.81
REC428-A25	60W-45300-20-8D	25" V6 90° 3.1L / 3.2 L	Contrarotación/ Counterrotation / Controrotante	1.81

MOTORES / ENGINES / MOTORI
V6
250D / DETO / DETOX / TR / TXR

No funciona en 250HP (4T)
Does not work on 250HP (4-Stroke)
Non funziona con i 250HP (4 tempi)

Ref.	R.O.	Cola completa Complete gearcase Piedi completi		Reducción Gear ratio Riduzione
REC416-B20	64K-45300-02-NA	20" V6 90º 2.6L		2.0:1

MOTORES / ENGINES / MOTORI
150HP (1987+) 200HP (1989+)
175HP (1989+) 225HP (1992+)

Ref.	R.O.	Cola completa Complete gearcase Piedi completi		Reducción Gear ratio Riduzione
REC416-B20F	63P-45300-00-8D	20" V6 90º		2.0:1
REC416-B25F	63P-45300-10-8D	20" V6 90º	Contrarotación/ Counterrotation / Controrotante	2.0:1
REC418-B25F	64P-45300-10-8D	25" V6 90º	Contrarotación/ Counterrotation / Controrotante	2.0:1

MOTORES / ENGINES / MOTORI
20" --> F150HP
25" --> LF150 HP

No funciona en 250HP (4T)
Does not work on 250HP (4-Stroke)
Non funziona con i 250HP (4 tempi)

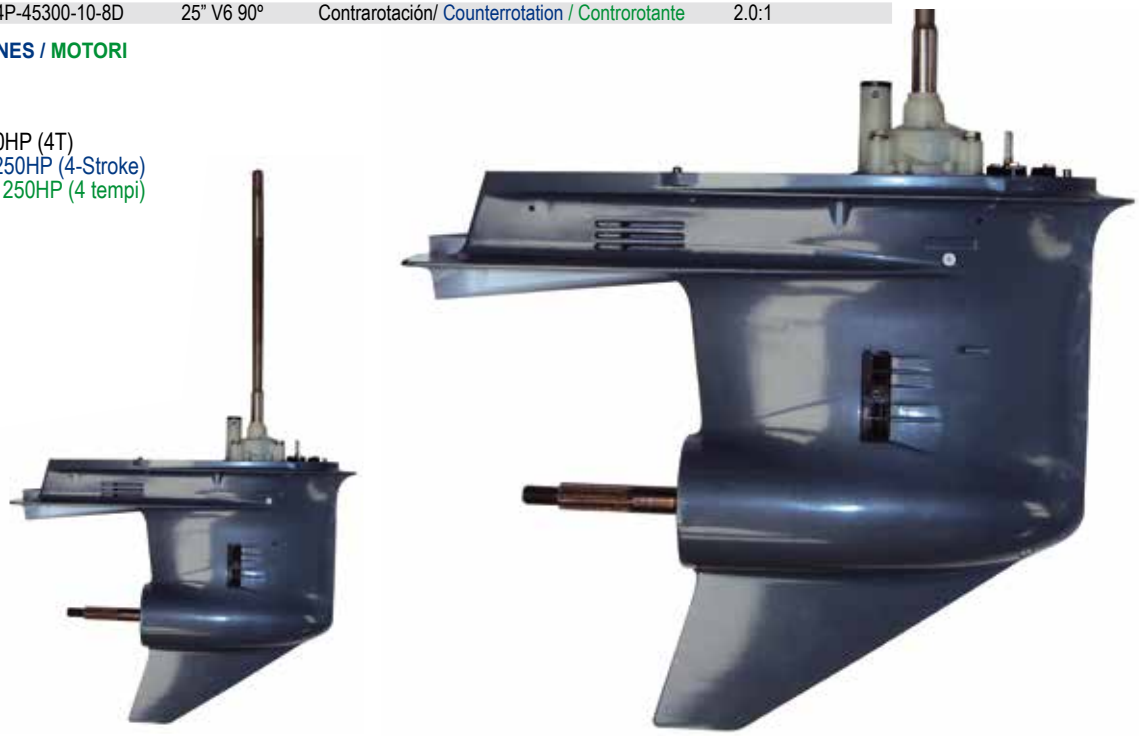

Ref.	R.O.	Cola completa Complete gearcase Piedi completi		Reducción Gear ratio Riduzione
REC421-B25F	69J-45300-21-8D	25" V6 76º		2.0:1
REC428-B25F	69K-45300-21-8D	25" V6 90º	Contrarotación/ Counterrotation / Controrotante	2.0:1

MOTORES / ENGINES / MOTORI
F200 HP
F225 HP

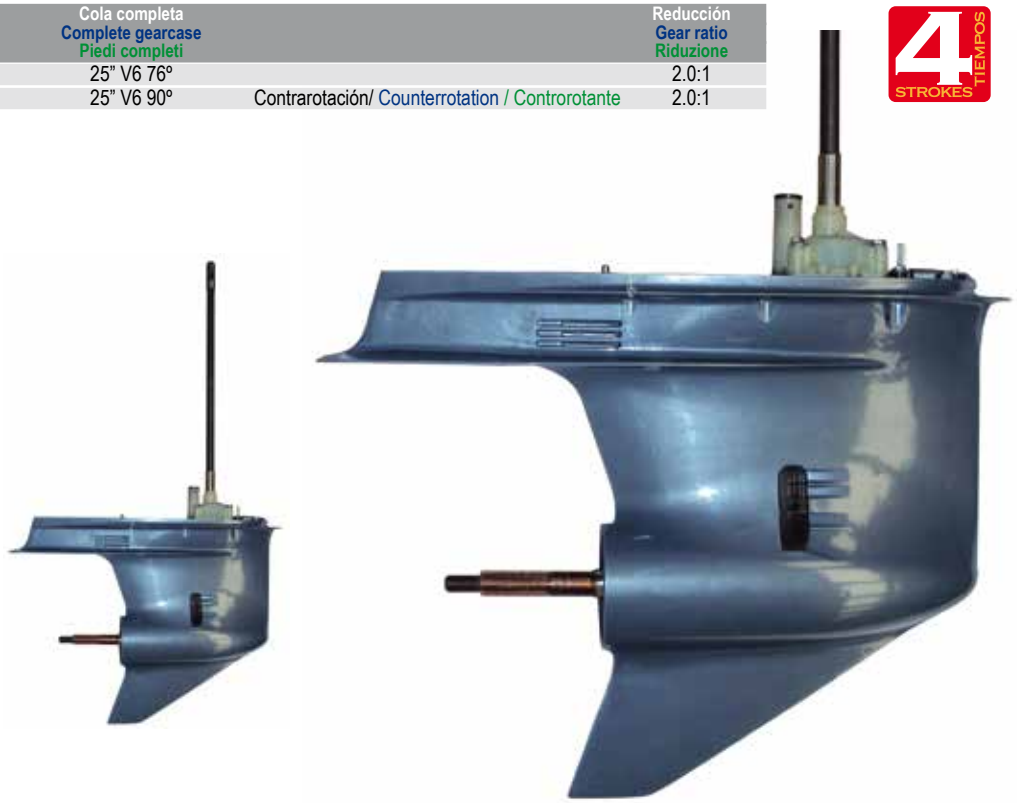

DESPIECE COLA
GEARCASE COMPONENTS
ESPLOSO PIEDE

4 STROKES TIEMPOS

F2.5 (2003+)

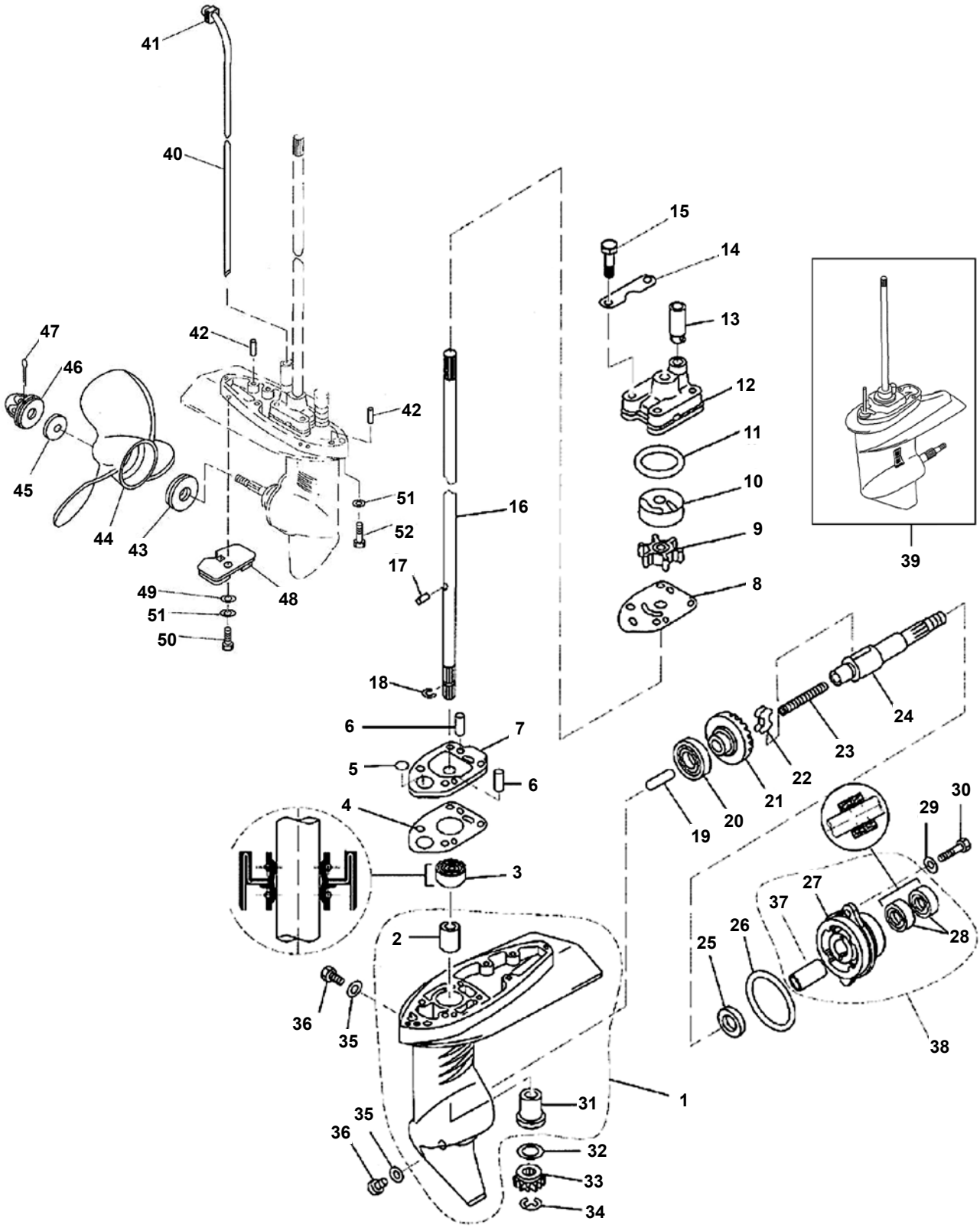

Nº	R.O. OEM	Ref.	Descripción	Description	Descrizione
1	69M-G5311-00-4D	**PAF2.6-03000001**	CARCASA	LOWER CASING	CARCASSA
2	6L5-45316-09	**PAF2.6-03000003**	COJINETE	BEARING	CUSCINETTO
3	93103-09M41	**PAF2.6-03000004**	RETÉN	OIL SEAL	PARAOLIO
4	69M-G5315-A0	**PAF2.6-03000007**	JUNTA	GASKET, WATER PUMP	GUARNIZIONE
5	93210-05001	**PAF2.6-03000009**	ARO TÓRICO	O-RING	O-RING
6	93604-18080	**PAF4-03000013**	PASADOR	PIN	SPINOTTO
7	69M-G5321-00-94	**PAF2.6-03000008**	CUERPO BOMBA	HOUSING, WATER PUMP	CORPO POMPA ACQUA
8	69M-G4323-00	**PAF2.6-03000010**	PLACA	OUT PLATE	PIASTRA
9	6L5-44352-00	**PAF2.6-03000100**	TURBINA	IMPELLER ASSY	GIRANTE
10	6L5-44322-00	**PAF2.6-03000015**	TAPA BOMBA AGUA	COVER, INNER WATER PUMP	TAPPO
11	93210-33M85	**PAJASO F404 19-033**	ARO TÓRICO	O-RING	O-RING
12	69M-G4311-00	**PAF2.6-03000014**	CUERPO BOMBA	WATER PUMP HOUSING	CORPO POMPA ACQUA
13	6R0-44366-00	**PAF4-03000021**	TUBO BOMBA AGUA	RUBBER TUBE, WATER PUMP	TUBO
14	69M-G4328-00	**PAF2.6-03000016**	PLATO BOMBA DE AGUA	PLATE, WATER PUMP FIXED	PIASTRA
15	97095-06040	**PAGB/T5783-2000**	TORNILLO	BOLT	VITE
16	69M-G5511-00	**PAF2.6-03000011S**	EJE VERTICAL	DRIVE SHAFT	ASSE VERTICALE
17	93604-07M13	**PAF2.6-03000013**	PASADOR	PIN	SPINOTTO
18	93440-08819	**PAF2.6-03000012**	CLIP	BOLT, DISCHARGING OIL	TAPPO
19	69M-G5635-00	**PAF2.6-03000020**	TAPÓN CAMBIO	PLUG, SHIFT	TAPPO
20	93316-003Y0	**PANTN 16003 EY**	COJINETE	BALL BEARING	CUSCINETTO
21	6L5-45560-00	**PAF2.6-03000019**	MARCHA POSITIVA	POSITIVE GEAR ASSY	MARCIA AVANTI
22	6L5-45631-00	**PAF2.6-03000202**	SELECTOR	CLUTCH BLOCK	SELETTORE
23	90501-10064	**PAF4-03030003**	MUELLE	SPRING, CLUTCH BLOCK	MOLLA
24	6L5-45631-00	**PAF2.6-030000201**	EJE HÉLICE	SHAFT, PROPELLER	ASSE ELICA
25	90201-13198	**PAF2.6-03000021**	ARANDELA	WASHER	RONDELLA
26	93210-48214	**PAJISB 2401 P48**	ARO TÓRICO	O-RING	O-RING
27	69M-G5361-00-4D	**PAF2.6-03000301**	TAPA CARTER	COVER, LOWER CASING	TAPPO CARTER
28	93101-13M12	**PAF4-03050002**	RETÉN	OIL SEAL	PARAOLIO
29	92995-06600	**PAGB/T5783-2000**	TORNILLO	BOLT	VITE
30	97095-06016	**PAGB/T97.1-85**	ARANDELA	WASHER	RONDELLA
31	6L5-45317-09	**PAF2.6-03000002**	COJINETE	BEARING	CUSCINETTO
32	6L5-45533-00-20	**PAF2.6-03000017**	GRUESO	SHIM (t: 2.0mm)	SPESSORE
33	6L5-45551-00	**PAF2.6-03000018**	MARCHA	INITIATIVE GEAR	MARCIA
34	99001-06600	**PAGB/T-896-86**	CERCLIP	CIRCLIP	CIRCLIP
35	90430-08020	**PAF4-03000024**	JUNTA	GASKET	GUARNIZIONE
36	90340-08002	**PAF4-03000023**	TAPÓN ACEITE	PLUG, OIL HOLE	TAPPO
37		**PAF2.6-03000302**	COJINETE CAMISA	BEARING, SLEEVE	CUSCINETTO ASSE
38		**PAF2.6-03000300**	TAPA CARTER	COVER ASSY, LOWER CASING	TAPPO
39	69M-G5300-01-4D	**PAF2.6-0300000L**	COLA COMPLETA -GRANDE	COMPLETE GEAR HOUSING –LARGE	PIEDE COMPLETO -GRANDE
39	69M-G5300-00-4D	**PAF2.6-0300000S**	COLA COMPLETA -PEQUEÑA	COMPLETE GEAR HOUSING –SMALL	PIEDE COMPLETO -PICCOLO
40	69M-44361-00	**PAF2.6-02000003**	TUBO AGUA	WATER TUBE	TUBO
41	68D-G4365-00	**PAF4-02040002**	BANDA DE GOMA	I-SHAPED RUBBER BAND	BOCCOLA
42	93604-12M07	**PAF15-00000013**	PASADOR	PIN	SPINOTTO
43	68D-G5978-00	**PAF4-03000025**	ESPACIADOR	SPACER	SPESSORE
44	6L5-45943-00-EL	**PAF2.6-03010000**	HÉLICE	PROPELLER ASSY	ELICHE
45	90201-08M54	**PAF4-03000026**	ARANDELA	WASHER	RONDELLA
46	6L5-45616-00	**PAF4-03080000**	TUERCA	NUT ASSY	DADO
47	91490-25030	**PAGB/T91-86**	PASADOR ALETAS	PIN, COTTER	SPINOTTO
48	68D-G5251-00	**PAF4-03000022**	ÁNODO	ANODE	ANODO
49	92990-06300	**PAGB/T861.1-87**	ARANDELA	WASHER, INTERNAL TOOCH	RONDELLA
50	95895-06020	**PAGB/T5783-2000**	TORNILLO	BOLT	VITE
51		**PAGB/T97.1-85**	ARANDELA	WASHER	RONDELLA
52	97095-06030	**PAGB/T5783-2000**	TORNILLO	BOLT	VITE

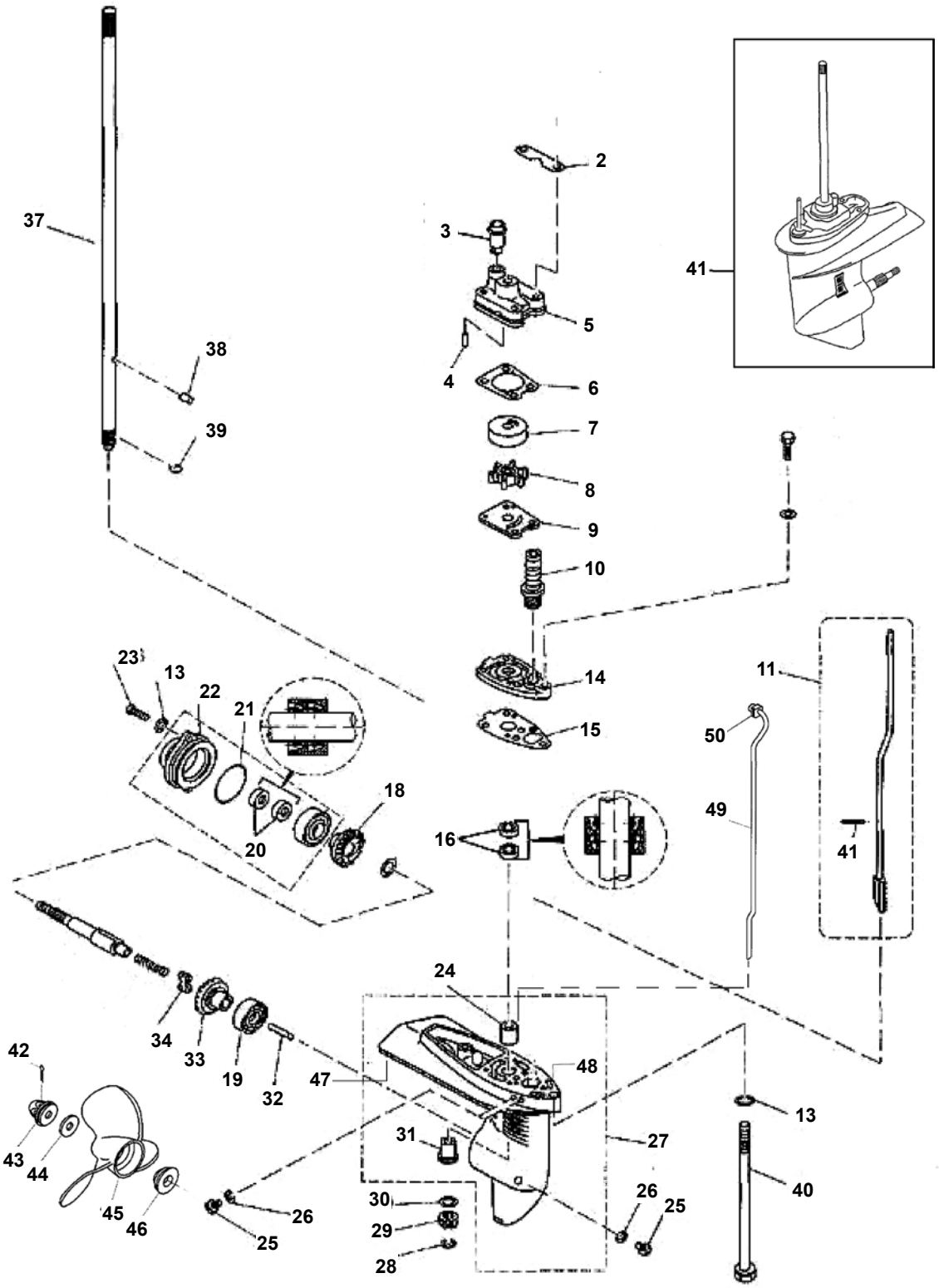
37
38
39
2
3
5
4
6
7
8
9
10
14
15
41
23
13
22
21
18
20
16
50
49
11
41
24
34
33
19
32
47
48
42
43
44
45
46
26
25
30
29
28
31
27
26
25
13
40

Nº	R.O. OEM	Ref.	Descripción	Description	Descrizione
2	68D-G4328-00	**PAF4-03000020**	PLATO BOMBA AGUA	PLATE, WATER PUMP FIXED	PIASTRA POMPA
3	67D-44366-00	**PAF4-03000021**	TUBO GOMA BOMBA AGUA	RUBBER TUBE, WATER PUMP	TUBO
4	93604-18080	**PAF4-03000013**	PASADOR BOMBA AGUA	PIN, WATER PUMP	SPINOTTO POMPA ACQUA
5	68D-G4311-01	**PAF4-03000019**	CUERPO BOMBA AGUA	HOUSING, WATER PUMP	CORPO POMPA
6	68D-G4315-A0	**PAF4-03000018**	JUNTA TAPA BOMBA AGUA	GASKET, WATER PUMP COVER	GUARNIZIONE
7	6E0-44322-02	**PAF4-03000017**	TAPA, BOMBA AGUA	COVER, INNER WATER PUMP	COPERCHIO
8	6E0-44352-00	**PAF4-03060000**	TURBINA BOMBA AGUA	IMPELLER, WATER PUMP	GIRANTE POMPA
9	6E0-44323-00	**PAF4-03000015**	PLATO	OUT PLATE	PIASTRA
10	6L2-44147-00	**PAF4-03000014**	GOMA, VARILLA DE CAMBIO	RUBBER JACKET, SHIFT ROD	GOMMA, ASTICELLA CAMBIO
11	68D-G4150-10	**PAF4-03020000**	VARILLA SELECTOR	CAM ASSY, SHIFT ROD	ASTICELLA CAMBIO
11	68D-G4150-00	**PAF4-03020000S**	VARILLA SELECTOR	CAM ASSY, SHIFT ROD –SMALL	ASTICELLA CAMBIO –CORTO
14	68D-G5321-00	**PAF4-03000012**	BASE BOMBA AGUA	BASE, WATER PUMP	BASE POMPA
15	68D-G5315-A0	**PAF4-03000011**	JUNTA HERMÉTICA BASE	HERMETIC GASKET, WATER PUMP BASE	GUARNIZIONE BASE POMPA ACQUA
16	93101-10M14	**PAF4-03000027**	RETÉN	OIL SEAL	PARAOLIO
18	67D-45570-00	**PAF4-03040000**	MARCHA INVERSA	REVERSE GEAR ASSY	RETROMARCIA
20	93101-13M12	**PAF4-03050002**	RETÉN	OIL SEAL	PARAOLIO
21	93210-48214	**PAJISB2401 P48**	ARO TÓRICO	O-RING	O-RING
22	68D-G5361-00-4D	**PAF4-03050001**	TAPA CÁRTER	COVER, LOWER CASING	TAPPO CARTER
23	95895-06016-00	**PAGB/T5783-2000**	TORNILLO HEXAGONAL	HEXAGON BOLT M6x18	VITE
24	6E0-45316-09	**PAF4-03000003**	RODAMIENTO	BEARING	CUSCINETTO
25	90340-08002	**PAF4-03000023**	TAPA ACEITE	PLUG, OIL HOLE M80	TAPPO
26	90430-08020	**PAF4-03000024**	JUNTA	GASKET	GUARNIZIONE
27	68D-G5300-11-4D	**PAF4-03000001**	CÁRTER	LOWER CASING	CARTER
28	99001-06600	**PAGB/T-896-86**	CERCLIP	CIRCLIP 6	CIRCLIP
29	6E0-45551-00	**PAF4-03000007**	MARCHA INICIAL	INITIATIVE GEAR	MARCIA INIZIATIVA
30	90204-11M49	**PAF4-03000006**	ARANDELA	WASHER, INITIATIVE GEAR	RONDELLA
31	6E0-45317-09	**PAF4-03000002**	RODAMIENTO	BEARING	CUSCINETTO
32	67D-45635-00	**PAF4-03000008**	ÉMBOLO	PLUGER, SHIFT	BULLONE
33	67D-45560-00	**PAF4-03010000**	MARCHA POSITIVA	POSITIVE GEAR ASSY	MARCIA POSITIVA
34	67D-45631-01	**PAF4-03030002**	SELECTOR	CLUTCH BLOCK	SELETTORE
37	6E0-45511-11	**PAF4-03000004**	EJE	SHAFT, DRIVE	ASSE
37	6E0-45511-01	**PAF4-03000004**	EJE	SHAFT, DRIVE –SMALL	ASSE
38	93604-09066	**PAF4-03000016**	PASADOR	PIN	SPINOTTO
39	90467-08M01	**PAF4-03000005**	CLIP	CLIP	CLIP
40		**PAGB/T5782-2000**	TORNILLO HEXAGONAL	HEXAGON BOLT L	VITE
40		**PAGB/T5782-2000S**	TORNILLO HEXAGONAL	HEXAGON BOLT S	VITE
41	68D-G5300-10-4D	**PAF-0300000L**	COLA COMPLETA -GRANDE	COMPLETE GEAR HOUSING –LARGE	PIEDE COMPLETO -LUNGO
41	68D-G5300-00-4D	**PAF-0300000S**	COLA COMPLETA -PEQUEÑA	COMPLETE GEAR HOUSING –SMALL	PIEDE COMPLETO -CORTO
42	91490-25030	**GB/T91-86**	PASADOR ALETAS	PIN, COTTER 2.5x30	PIN
43	6L5-45616-00	**PAF4-03080000**	TUERCA	NUT ASSY	DADO
44	90201-08M54	**PAF4-03000026**	ARANDELA INOX.	WASHER, STAINLESS STEEL	RONDELLA INOX.
45	6E0-45943-01-EL	**PAF4-03070000**	HÉLICE	PROPELLER ASSY	ASSE ELICA
46	68D-G5987-00	**PAF4-03000025**	ESPACIADOR	SPACER	SPESSORE
47	68D-G5251-00	**PAF4-03000022**	ÁNODO	ANODE	ANODO
48	90387-06806	**PAF4-00000001**	PASADOR VACÍO	HOLLOW PIN	SPINOTTO
49	68D-G4360-10	**PAF4-02040001**	TUBO AGUA	WATER TUBE ASSY	TUBO
49	68D-G4360-00	**PAF4-02040001S**	TUBO AGUA	WATER TUBE ASSY –SMALL	TUBO
50		**PAF4-02040002**	BANDA DE GOMA	I-SHAPED RUBBER BAND	NASTRO DI GOMMA

F9.9 (1998-2008) - F13.5 (2002-2007) - F15 (1998-2007)

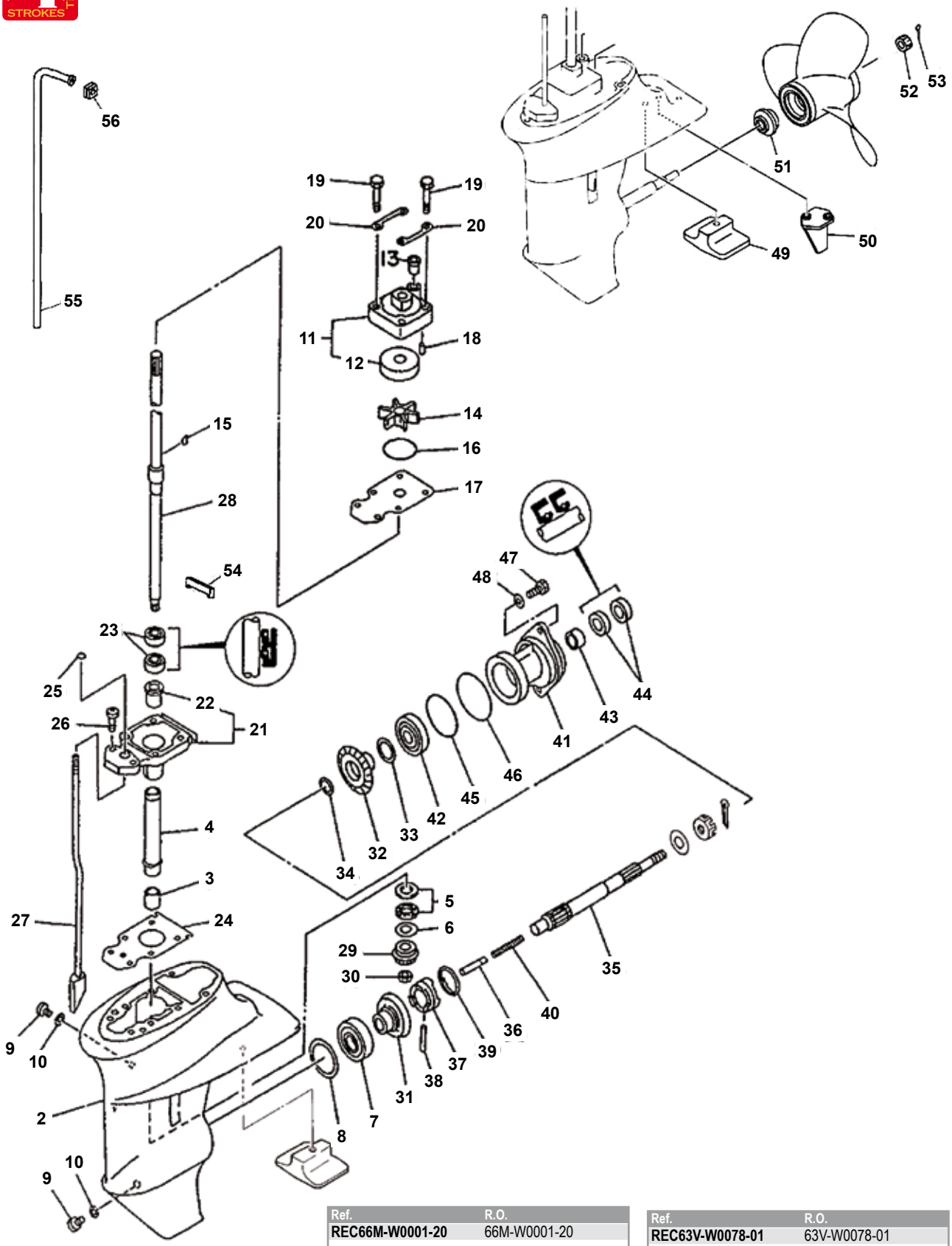

Ref.	R.O.
REC66M-W0001-20	66M-W0001-20

Kit juntas cola
Gearcase seal kit
Kit guarnizione piede

Ref.	R.O.
REC63V-W0078-01	63V-W0078-01

Kit reparación Bomba agua
Water Pump kit
Kit riparazione Pompa acqua

Nº	R.O. OEM	Ref.	Descripción	Description	Descrizione
1	66M-45300-11-4D	**PAF15-06100000L**	CONJUNTO COLA "L"	LOWER UNIT "L"	PIEDI COMPLETI "L"
2	66M-45300-02-4D	**PAF15-06100000S**	CONJUNTO COLA "S"	LOWER UNIT "S"	PIEDI COMPLETI "L"
3	93315-314V8	**REC93315-314V8**	COJINETE AGUJAS	BEARING	CUSCINETTO
4	63V-45536-00	**PAF15-06000006**	CAMISA EJE	SLEEVE, DRIVE	TUBO GUIDA
5	93341-41414	**REC93341-41414**	COJINETE	BEARING	CUSCINETTO
6	6E8-45587-10-13	**PAF15-06000008**	GRUESO	SHIM	SPESSORE
7	93332-00005	**REC93332-00005**	COJINETE	BEARING	CUSCINETTO
8	664-45567-01-10	**PAF15-06000010-1**	GRUESO	SHIM	SPESSORE
9	90340-08002	**PAF4-03000023**	TAPÓN VACIADO	PLUG	TAPPO
10	90430-08020	**REC90430-08020**	JUNTA	GASKET	GUARNIZIONE
11	63V-44301-00	**REC63V-44301-00**	CUERPO BOMBA	PUMP HOUSING	CORPO POMPA
12	63V-44322-00	**REC63V-44322-00**	ACOPLE BOMBA	INSERT	GHIERA INOX.
13	647-44366-00	**PAF15-06060004**	RETÉN	DAMPER	BOCCOLA
14	63V-44352-01	**REC63V-44352-01**	TURBINA	IMPELLER	GIRANTE
15	664-44338-00	**REC664-44338-00**	CHAVETA	KEY	CHIAVETTA
16	93210-44398	**REC93210-44398**	ANILLO TÓRICO	O-RING	O-RING
17	63V-44323-00	**REC63V-44323-00**	PLATO BOMBA	OUTER PLATE	PIASTRA POMPA
18	93604-12M07	**PAF15-00000013**	PIN	COVER, LOWER CASING	SPINOTTO
19	97080-08045	**REC97080-08045**	TORNILLO	BOLT	VITE
20	63V-44328-00	**PAF15-06000014**	REFUERZO GUÍA	PLATE	PIASTRA
21	63V-45331-00-5B	**PAF15-06020001**	CUERPO COJINETE	HOUSING, BEARING	CUSCINETTO
22	626-45316-09	**REC626-45316-09**	CASQUILLO EJE	BUSHING	CAPPUCCIO ASSE
23	93101-20048	**REC93101-20048**	RETÉN	OIL SEAL	PARAOLIO
24	63V-45315-A0	**REC63V-45315-A0**	JUNTA	PACKING	GUARNIZIONE
25	93210-06ME6	**REC93210-06ME6**	ARO TÓRICO	O-RING	O-RING
26	97080-08025	**PAGB/T5783-M8X25**	TORNILLO	BOLT	VITE
27	63V-44150-00	**PAF15-06030000S**	EJE SELECTOR	SHIFT CAM S	ASSE SELETTORE
28	63V-45510-00	**PAF15-06040000S**	EJE VERTICAL	DRIVE SHAFT S	ASSE VERTICALE
29	63V-45551-00	**REC63V-45551-00**	PIÑÓN	PINION	PIGNONE
30	90179-08M06	**REC90179-08M06**	TUERCA	NUT	DADO
31	6E7-45560-01	**REC6E7-45560-01**	PIÑÓN	GEAR	PIGNONE
32	6E7-45571-00	**REC6E7-45570-00**	PIÑÓN	GEAR	PIGNONE
33	626-45577-00-01	**PAF15-06080006-1**	GRUESO	SHIM	SPESSORE
34	90201-17682	**REC90201-17682**	ARANDELA	WASHER	RONDELLA
35	683-45611-00	**REC683-45611-00**	EJE HÉLICE	SHAFT PROPELLER	ASSE ELICA
36	650-45635-00	**REC650-45635-00**	PISTÓN	PLUNGER	PISTONE
37	682-45631-00	**REC682-45631-00**	SELECTOR	CLUTCH, DOG	SELETTORE
38	90250-05010	**REC90250-05010**	PASADOR	PIN	SPINOTTO
39	648-45633-00	**REC648-45633-00**	MUELLE	SPRING, CROSS PIN	MOLLA
40	90501-14M06	**PAF15-06070002**	MUELLE	SPRING, COMPRESSION	MOLLA
41	683-45361-02-4D	**REC683-45361-01-94**	DIÁBOLO	CAP, LOWER CASING	COP. CARTER INFERIORE.
42	93306-00501	**REC93306-00501**	COJINETE	BEARING	CUSCINETTO
43	93315-317U2	**REC93315-317U2**	COJINETE AGUJAS	BEARING	CUSCINETTO
44	93101-17054	**REC93101-17054**	RETÉN	OIL SEAL	PARAOLIO
45	93210-57M09	**REC93210-57M09**	ARO TÓRICO	O-RING	O-RING
46	93210-56M80	**PAF15-06080003**	ARO TÓRICO	O-RING	O-RING
47	97095-06020	**PAGB/T5783-M6X20**	TORNILLO	BOLT	VITE
48	92995-06600	**PAGB/T97.1-6**	ARANDELA	WASHER	RONDELLA
49	61N-45251-01	**CM61N-45251-01**	ÁNODO	ANODE	ANODO
50	66M-45371-00	**REC66M-45371-00**	ÁNODO TIMÓN	TAB-TRIM	ANODO
51	6E7-45978-01	**REC6E7-45987-00**	ESPACIADOR	SPACER	SPESSORE
52	90171-10M01	**REC90171-10M01**	TUERCA HÉLICE	NUT, CASTLE	DADO ELICA
53	91490-30020	**REC91490-30020**	PASADOR ALETAS	PIN, COTTER	SPINOTTO
54	63V-4436510	**PAF15-02000006**	GOMA	RUBER	GOMMA
55	66M-44361-00	**PAF15-02000005S**	TUBO AGUA	WATER TUBE –SMALL	TUBO
55	66M-44361-10	**PAF15-02000005**	TUBO AGUA	WATER TUBE –LARGE	TUBO
56	63V-44365-10	**PAF15-02000006**	TUBO GOMA AGUA	RUBER WATER TUBE	TUBO

F20 - F25

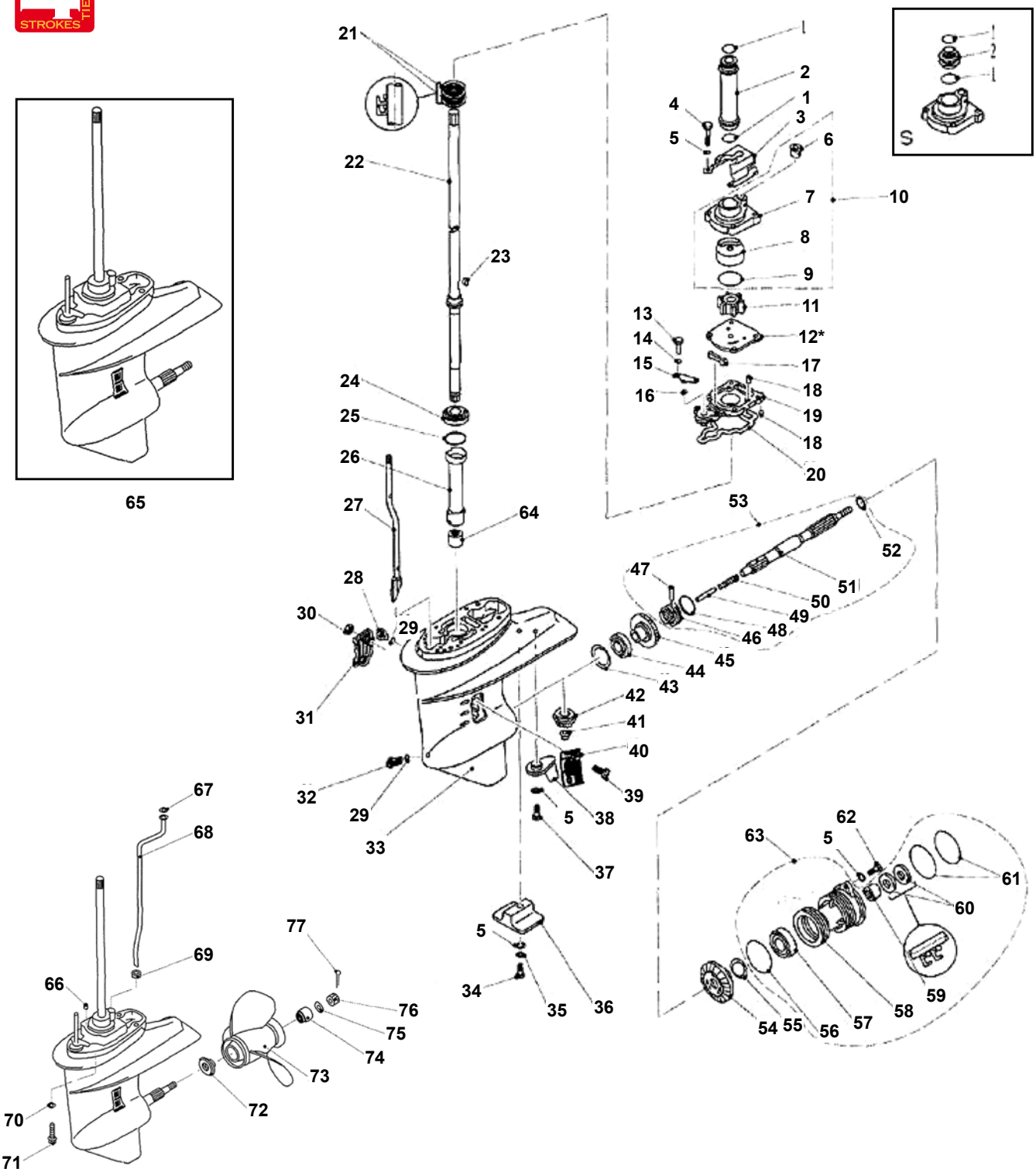

Nº	R.O. OEM	Ref.	Descripción	Description	Descrizione
1	93210-26130	**PAGB/T3452.1-92**	ARO TÓRICO	O-RING	O-RING
2	61N-44362-10	**PAF25-04000017**	TUBO AGUA	TUBE, WATER	TUBO
2	61N-44362-00	**PAF25-04000017S**	TUBO AGUA	TUBE, WATER –SMALL–	TUBO
3	65W-44328-00	**PAF25-04000016**	PLATO FIJO BOMBA AGUA	FIXED PLATE, WATER PUMP	PIASTRA POMPA
4		**PAGB/T5782-2000**	TORNILLO	BOLT	VITE
5		**PAGB/T97.1-85**	ARANDELA	WASHER	RONDELLA
6	6L2-44367-00	**PAF25-04050004**	RETÉN TUBO AGUA	DAMPER, WATER PIPE	BOCCOLA
7	61N-44311-01	**PAF25-04050001**	CUERPO BOMBA	SHELL, WATER PUMP	CORPO POMPA
8	61N-44322-01	**PAF25-04050002**	CASQUILLO INOX.	SHELL, INNER	CAP INOX.
9	93210-45161	**PAF25-04050003**	ARO TÓRICO	O-RING	O-RING
10		**PAF25-04050000**	KIT CUERPO BOMBA	SHELL ASSY, WATER PUMP	KIT CORPO POMPA
11	6H4-44352-02	**PAF25-04040000**	TURBINA	IMPELLER ASSY	GIRANTE
12	61N-44323-00	**PAF25-04000014**	PLATO BOMBA AGUA	OUTER PLATE	PIASTRA POMPA ACQUA
13		**PAGB/T5783-2000**	TORNILLO	BOLT	VITE
14		**PAGB/T97.1-85**	ARANDELA	WASHER	RONDELLA
15	65W-44176-00	**PAF25-04000012**	PLATO, ARO TÓRICO	PLATE, O-RING	PIASTRA O-RING
16	93210-06ME6	**PAF15-06020004**	ARO TÓRICO	O-RING	O-RING

Nº	R.O. OEM	Ref.	Descripción	Description	Descrizione
17	61N-45127-00	**PAF25-04000013**	RETÉN AGUA	WATER SEAL	PARAOLIO ACQUA
18	93604-10M03	**PAF25-04000007**	PIN	PIN, DOWEL	SPINOTTO
19	65W-45331-00-5B	**PAF25-04000008**	BASE EJE VERTICAL	BASE, DRIVE SHAFT	BASE, ASSE VERTICALE
20	61N-45315-00	**PAF25-04000009**	RETÉN	SEAL	PARAOLIO
21	93101-22067	**PAF25-04010003**	RETÉN ACEITE	OIL SEAL, DRIVE SHAFT	PARAOLIO
22	61N-45510-10	**PAF25-04010000**	EJE VERTICAL	DRIVE SHAFT ASSY	ASSE VERTICALE
22	61N-45510-00	**PAF25-04010000S**	EJE VERTICAL	DRIVE SHAFT ASSY –SMALL	ASSE VERTICALE
23	90280-03024	**PAF25-04000015**	CHAVETA SEMICIRCULAR	SEMICIRCULAR KEY	CHIAVETTA SERMICIRCOLARE
24	93332-000W5	**PAHI-CAP 32004JR KOYO**	CUERPO RODAMIENTO	HOUSING, BEARING	CORPO CUSCINETTO
25	61N-45587-00-07	**PAF25-04000003-1**	GRUESO	SHIM (t:0.7mm)	SPESSORE
25	61N-45587-00-10	**PAF25-04000003-2**	GRUESO	SHIM (t:1.0mm)	SPESSORE
25	61N-45587-00-11	**PAF25-04000003-3**	GRUESO	SHIM (t:1.1mm)	SPESSORE
25	61N-45587-00-12	**PAF25-04000003-4**	GRUESO	SHIM (t:1.2mm)	SPESSORE
25	61N-45587-00-13	**PAF25-04000003-5**	GRUESO	SHIM (t:1.3mm)	SPESSORE
25	61N-45587-00-14	**PAF25-04000003-6**	GRUESO	SHIM (t:1.4mm)	SPESSORE
25	61N-45587-00-15	**PAF25-04000003-7**	GRUESO	SHIM (t:1.5mm)	SPESSORE
25	61N-45587-00-16	**PAF25-04000003-8**	GRUESO	SHIM (t:1.6mm)	SPESSORE
26	61N-45536-00	**PAF25-04000002**	CASQUILLO	BUSHING, NYLON	GHIERA
27	65W-44150-10	**PAF25-04030000**	VARILLA DE CAMBIO	CAM ASSY, SHIFT ROD	ASTICELLA CAMBIO
27	65W-44150-00	**PAF25-04030000S**	VARILLA DE CAMBIO	CAM ASSY, SHIFT ROD –SMALL	ASTICELLA CAMBIO –CORTO
28	90340-08M04	**PAF4-03000023**	TAPÓN ACEITE	PLUG, HOLE OIL	TAPPO
29	93210-06ME6	**PAF4-03000024**	JUNTA	GASKET	GUARNIZIONE
30		**PAGB/T889.1-2000**	TUERCA	NUT, LOCKING	DADO
31	6L2-45215-00	**PAF25-04000023**	TAPA FILTRO	WATER INLET “B”	COPERCHIO DEL FILTRO
32	688-45341-00	**PAF25-04000031**	TAPÓN DESAGÜE	PLUG, DRAIN	TAPPO
33	61N-45311-02-4D	**PAF25-04000001**	CARTER	LOWER CASING	CARTER
34		**PAGB/T5782-2000**	TORNILLO	BOLT	VITE
35	92990-06300	**PAGB/T861.1-87**	ARANDELA	WASHER, LOCKING	RONDELLA
36	61N-45251-00	**PAF15-06000004**	ÁNODO	ANODE, LOWER	ANODO
37		**PAGB/T5783-2000**	TORNILLO	BOLT	VITE
38	61N-45214-00	**PAF25-04000021**	PLACA TIMÓN	TAB, COURSE	PIASTRA TIMONE
39		**PAGB/T820-2000**	TORNILLO	SCREW, PAN HEAD	VITE
40	6L2-45214-00	**PAF25-04000022**	TAPA FILTRO	WATER INLET “A”	PIASTRA FILTRO
41	90179-10M14	**PAF25-04000006**	TUERCA	NUT, PINION	DADO
42	61N-45551-00	**PAF25-04000005**	PIÑÓN	PINION	PIGNONE
43	6L2-45567-10	**PAF25-04000004-1**	GRUESO	SHIM (t:1.0mm)	SPESSORE
43	6L2-45567-11	**PAF25-04000004-2**	GRUESO	SHIM (t:1.1mm)	SPESSORE
43	6L2-45567-12	**PAF25-04000004-3**	GRUESO	SHIM (t:1.2mm)	SPESSORE
43	6L2-45567-13	**PAF25-04000004-4**	GRUESO	SHIM (t:1.3mm)	SPESSORE
43	6L2-45567-14	**PAF25-04000004-5**	GRUESO	SHIM (t:1.4mm)	SPESSORE
44	93332-00005	**PANTN 4T-30205 HN**	RODAMIENTO	TAPER ROLLER BEARING	CUSCINETTO
45	61N-45560-00	**PAF25-04020000**	MARCHA ATRÁS	GEAR, FORWARD	MARCIA AVANTI
46	664-45631-02	**PAF-04060003**	DESPLAZABLE	CLUTCH, DOG	SCORREVOLE
47	90250-05010	**PAF15-06070004**	PASADOR	PIN, CLUTCH	SPINOTTO
48	648-45633-00	**PAF15-06070005**	ANILLO	RING, CLUTCH	O-RING
49	648-45635-00	**PAF25-04060006**	EMPUJADOR	PLUNGER, SHAFT	STANTUFFO
50	90501-10065	**PAF25-04060002**	MUELLE	SPRING, CLUTCH	MOLLA
51	612-45611-00	**PAF25-04060001**	EJE HÉLICE	SHAFT, PROPELLER	ASSE ELICHE
52	90201-20417	**PAF25-04060007**	PLATO MARCHA INVERSA	PLATE, REVERSE GEAR	PIASTRA MARCIA INDIETRO
53		**PAF25-04060000**	EJE HÉLICE	PROPELLER, SHAFT ASSY	ASSE ELICHE
54	61N-45571-00	**PAF25-04070004**	MARCHA INVERSA	GEAR, REVERSE	MARCIA INDIETRO
55	6L2-45577-00-10	**PAF25-04070005-1**	GRUESO	SHIM (t:1.0mm)	SPESSORE
55	6L2-45577-00-11	**PAF25-04070005-2**	GRUESO	SHIM (t:1.1mm)	SPESSORE
55	6L2-45577-00-12	**PAF25-04070005-3**	GRUESO	SHIM (t:1.2mm)	SPESSORE
55	6L2-45577-00-13	**PAF25-04070005-4**	GRUESO	SHIM (t:1.3mm)	SPESSORE
56	93210-64ME7	**PAF25-04070002**	ARO TÓRICO	O-RING A	O-RING
57	93306-00612	**PAKOYO 6006C3**	RODAMIENTO	BALL BEARING	CUSCINETTO
58	61N-45361-01-4D	**PAF25-04070001**	TAPA CÁRTER	COVER, LOWER CASING	COPERCHIO CARTER
59	93315-22004	**PANTN HK2016HU**	RODAMIENTO	ROLLER GEARING	CUSCINETTO
60	93101-20M07	**PAF25-04070006**	RETÉN	OIL SEAL	PARAOLIO
61	93210-65M50	**PAF25-04070003**	ARO TÓRICO	O-RING B	O-RING
62		**PAGB/T5783-2000**	TORNILLO	BOLT	VITE
63		**PAF25-04070000**	TAPA CÁRTER	COVER ASSY, LOWER CASING	COPERCHIO CARTER
64	93315-220V7	**PAF2020**	RODAMIENTO	NEEDLE BEARING	CUSCINETTO
65	65W-45300-10-4D	**PAF25-0400000L**	COLA COMPLETA -GRANDE	COMPLETE GEAR HOUSING –LARGE	PIEDE COMPLETO -LUNGO
65	65W-45300-00-4D	**PAF25-0400000S**	COLA COMPLETA -PEQUEÑA	COMPLETE GEAR HOUSING –SMALL	PIEDE COMPLETO -CORTO
66	93606-11M24	**PAF15-00000006**	PIN	PIN, DOWEL	SPINOTTO
67	90202-12060	**PAF25-02000019**	ARANDELA	WASHER, NYLON	RONDELLA
68	65W-44361-10	**PAF25-02000004L**	TUBO AGUA	TUBE, WATER –LARGE	TUBO -LUNGO
68	65W-44361-00	**PAF25-02000004S**	TUBO AGUA	TUBE, WATER –SMALL	TUBO -CORTO
69	90430-12072	**PAF25-02000005**	JUNTA AGUA	GASKET, WATER PIPE	GUARNIZIONE
70	92995-10600	**PAGB/T97.1-85**	ARANDELA	WASHER	RONDELLA
71	90105-10M12	**PAF25-00000011**	TORNILLO	BOLT	VITE
72	6L2-45987-01	**PAF25-04000024**	ESPACIADOR	SPACER, PROPELLER	SPESSORE
73	664-45947-01-EL	**PAF25-04080000**	HÉLICE	PROPELLER ASSY	ELICHE
74	689-45997-00	**PAF25-04000025**	ESPACIADOR	SPACER	SPESSORE
75	92990-14200	**PAGB/T97.1-85**	ARANDELA	WASHER	RONDELLA
76	90171-14013	**PAF25-04000027**	TUERCA	NUT	DADO
77	91490-30022	**PAGB/T91-86**	PIN	PIN, COTTER	SPINOTTO

V6 2.6L - FL/F200 - FL/F225- FL/F250

Ref.	R.O.
REC6E5-W0001-F1	6G5-W0001-21-00

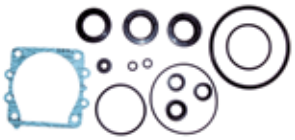

Kit juntas cola
Gearcase seal kit
Kit guarnizione piede

Ref.	R.O.
REC6G5-W0078-A1	6G5-W0078-A1-00

Kit reparación Bomba agua
Water Pump kit
Kit riparazione Pompa acqua

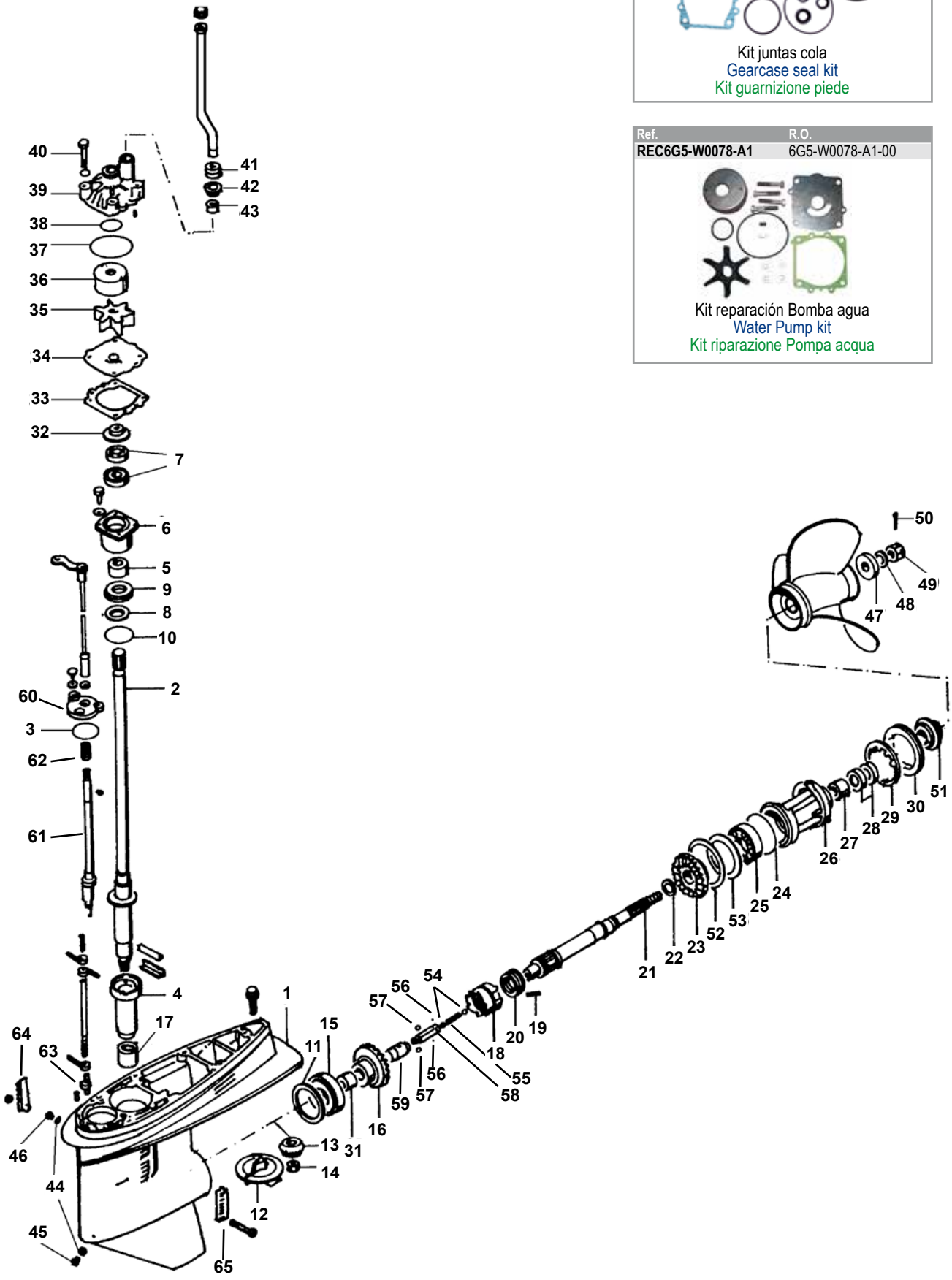

Nº	R.O. OEM	Ref.	Descripción	Description	Descrizione
1	64D-45300-01-8D	**REC416-A20**	COLA COMPLETA	LOWER UNIT ASSY	PIEDI COMPLETI
1	64D-45300-21-8D	**REC416-A25**	COLA COMPLETA	LOWER UNIT ASSY	PIEDI COMPLETI
2	63P-45501-00	**REC63P-45501-00**	EJE (LARGO 20")	DRIVE SHAFT 20"	ASSE VERTICALE 20"
2	63P-45501-10	**REC63P-45501-10**	EJE (LARGO 25")	DRIVE SHAFT 25"	ASSE VERTICALE 25"
3	93210-58677	**REC93210-58677**	ARO, PLATO	O-RING	O-RING
4	6G5-45536-01	**REC6G5-45536-01**	CAMISA, EJE	SLEEVE	ASSE
5	93315-430V5	**REC93315-430V5**	COJINETE AGUJAS	BEARING	CUSCINETTO
6	6E5-45331-00-94	**REC6E5-45331-00-94**	CUERPO COJINETE	HOUSSING	CORPO CUSCINETTO
7	93101-28M16	**REC93101-28M16**	RETÉN, EJE	OIL SEAL	PARAOLIO
8	6E5-45587-01	**REC6E5-45587-01**	ESPACIADOR	SHIM	SPESSORE
9	93341-930U0	**REC93341-930U0**	COJINETE	BEARING	CUSCINETTO
10	93210-54534	**GLM84215**	ARO	O-RING	O-RING
11	6G5-45567-01	**REC6G5-45567-01**	ESPACIADOR	SHIM	SPESSORE
12	6J9-45371-01	**CM6J9-45371-01**	ÁNODO	ANODE	ANODO
13	6G5-45551-01	**REC6G5-45551-00**	PIÑÓN	GEAR	PIGNONE
14	90170-16M01	**REC90170-16M01**	TUERCA, PIÑÓN	NUT	DADO
15	93332-000V3	**REC93332-000V3**	COJINETE	BEARING	CUSCINETTO
16	6G5-45631-00	**REC6G5-45631-00**	PIÑÓN MARCHA	GEAR F.W.	PIGNONE MARCIA
17	90250-08M07	**REC90250-08M07**	COJINETE AGUJAS	BEARING	CUSCINETTO
18	6E5-45631-01	**REC6E5-45631-00**	SELECTOR	CLUTCH	SELETTORE
19	90250-08M07	**REC90250-08M07**	PASADOR	PIN	SPINOTTO
20	6E5-45633-01	**REC6E5-45633-01**	RETENEDOR	SPRING	MOLLA
21	6J9-45611-01	**REC6J9-45611-00**	EJE HÉLICE	PROPELLER SHAFT	ASSE ELICHE
22	90201-30M92	**REC90201-30M92**	ARANDELA	WASHER	RONDELLA
23	6G5-45570-02	**REC6G5-45570-00**	PIÑÓN MARCHA ATRÁS	GEAR R.V.	PIGNONE MARCIA INDIETRO
24	93210-97M55	**REC93210-97M55**	ARO, COJINETE	O-RING	O-RING
25	93306-209U0	**REC93306-209U0**	COJINETE	BEARING	CUSCINETTO
26	6J9-45332-00-94	**REC6E5-45331-00-94**	DIÁBOLO	GEAR HOUSING	SCATOLA INGRANAGGI
27	93315-430U8	**REC93315-430U8**	COJINETE AGUJAS	BEARING	CUSCINETTO
28	91301-30M17	**REC93101-30M17**	RETÉN, EJE HÉLICE	OIL SEAL	PARAOLIO
29	6G5-45383-01	**REC6G5-45383-01**	ARANDELA	WASHER	RONDELLA
30	6G5-45384-00	**REC8G5-45384-00**	TUERCA	NUT	DADO
31	93315-425V3	**REC93315-425V3**	COJINETE AGUJAS	BEARING	CUSCINETTO
32	6E5-45344-00	**REC6E5-45344-00**	RETÉN ACEITE	OIL SEAL	PARAOLIO
33	6E5-44315-A0	**REC6E5-44315-00**	JUNTA	GASKET	GUARNIZIONE
34	6G5-44323-00	**REC6G5-44323-00**	TAPA	CAP	COPERCHIO
35	6E5-44352-00	**REC6E5-44352-01**	IMPULSOR	IMPELLER	GIRANTE
36	6E5-44322-00	**REC6E5-44322-00/41**	ACOPLE INOX.	INSERT CUP – MODERN–	ACCOPIAMENTO INOX
37	93210-86M38	**REC93210-86M38**	ARO, BOMBA AGUA	O-RING	O-RING
38	93210-37M67	**REC93210-37M67**	ARO, BOMBA AGUA	O-RING	O-RING
39	6E5-44311-00	**REC6E5-44311-00**	CUERPO BOMBA AGUA	W.P. HOUSING –MODERNO–	CORPO POMA ACQUA
40	97080-08045	**REC97080-08045**	TORNILLO, BOMBA AGUA	BOLT	VITE
41	6E5-44366-00	**GLM38301**	FLECTOR RETÉN AGUA	DAMPER	BOCCOLA
42	6E5-44312-00	**REC6E5-44312-00**	TAPA BOMBA	CAP	COPERCHIO POMPA
43	6E5-44365-00	**GLM38300**	FLECTOR RETÉN AGUA	SEAL	BOCCOLA
44	90430-08020	**REC90430-08020**	JUNTA, TAPONES DRENAJE	GASKET	GUARNIZIONE
45	688-45341-00	**REC688-45341-00**	TAPÓN DRENAJE INFERIOR	PLUG	TAPPO INFERIORE.
46	90340-08M04	**REC90340-08014**	TAPÓN DRENAJE SUPERIOR	PLUG	TAPPO SUPERIORE.
47	688-45997-01	**REC688-45997-00**	ESPACIADOR HÉLICE	SPACER	SPESSORE
48	92990-18200	**GLM21221**	ARANDELA HÉLICE	WASHER	RONDELLA
49	90171-18M04	**REC90171-18M04**	TUERCA HÉLICE	NUT	DADO
50	91490-40030	**REC91490-40030**	PASADOR	PIN	SPINOTTO
51	6E5-45987-00	**REC6E5-45987-00**	ARANDELA	WASHER	RONDELLA
53	6G5-45576-00	**REC6G5-45576-10**	ARANDELA	WASHER	RONDELLA
54	93511-32027	**REC93511-32027**	BOLA	BALL	BOLLA
55	90501-16M37	**REC90501-16M37**	MUELLE	SPRING	MOLLA
56	93503-16003	**REC93503-16003**	BOLA	BALL	BOLLA
57	93507-32031	**REC93507-32031**	BOLA	BALL	BOLLA
58	6E5-45634-01	**REC6E5-45634-01**	PASADOR	SHIFT SLIDE	PERNO
59	6E5-45641-03	**REC6E5-45641-03**	EJE	SHIFTER	ASSE
60	6E5-45321-00	**REC6E5-45321-00**	TAPA CAMBIO	PLATE	PIASTRA
61	6G5-44150-02	**REC6G5-44150-02**	EJE CAMBIO	SHIFT SHAFT	ASSE
62	90501-11M18	**REC90501-11M18**	MUELLE	SPRING	MOLLA
63	6E5-45378-00	**REC6E5-45378-00**	NIPLE	PIPE	TUBO
64	6J9-45215-00		TAPA	COVER	COPERCHIO
65	6J9-45214-00		TAPA	COVER	COPERCHIO

FL/F225 - FL/F250

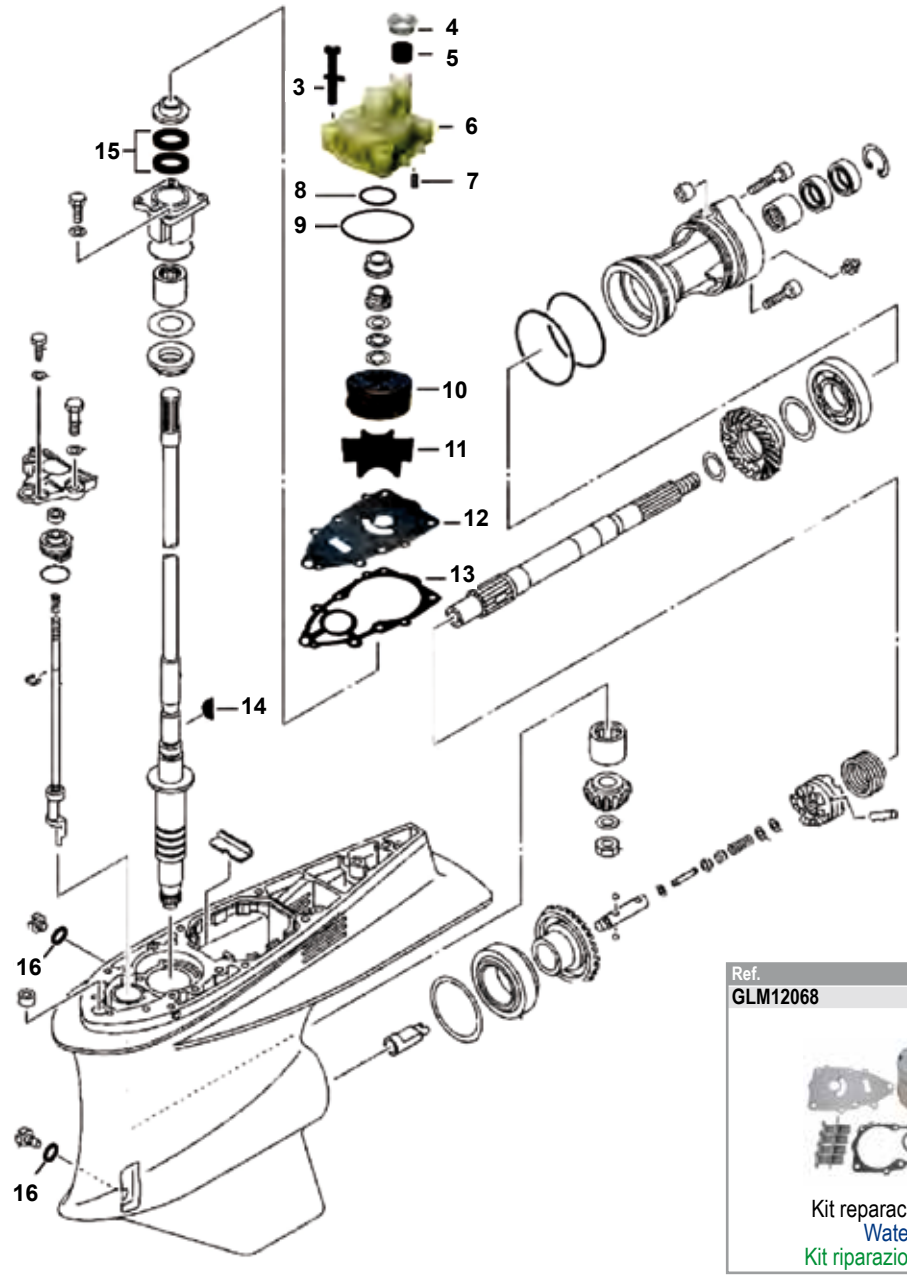

Ref.	R.O.
GLM12068	60X-W0078-00

Kit reparación Bomba agua
Water Pump kit
Kit riparazione Pompa acqua

Nº	R.O./ OEM	Ref.	Descripción	Description	Descrizione
2	60X-W0078-00	**GLM12068**	KIT BOMBA AGUA	WATER PUMP KIT w/o HOUSING	KIT RIPARAZIONE POMPA ACQUA
3	90119-08M14	**REC90119-08M14**	TORNILLO CON ARANDELA	BOLT w/ WASHER	VITE
4	6E5-44312-00	**REC6E5-44312-00**	TAPA CUERPO BOMBA	COVER, WATER PUMP HOUSING	COPERCHIO CORPO BOMBA
5	6E5-44365-00	**GLM38300**	RETÉN	DAMPER	BOCCOLA
6	61A-44311-01	**REC61A-44311-00**	CUERPO BOMBA AGUA	WATER PUMP HOUSING	CORPO POMPA ACQUA
7	93606-12019	**REC93606-12019**	PIN	PIN, DOWELL	SPINOTTO
8	93210-37M67	**REC93210-37M67**	ARO TÓRICO	O-RING	O-RING
9	93210-86M38	**REC93210-86M38**	ARO TÓRICO	O-RING	O-RING
10	61A-44322-02	**REC61A-44322-02**	ACOPLE INOX.	PUMP CUP	POMPA CUP
11	6E5-44352-01	**REC6E5-44352-01**	IMPULSOR	IMPELLER	GIRANTE
12	6PS-44323-00	**REC6P2-44323-00**	TAPA BOMBA	WEAR PLATE	COPERCHIO POMPA
13	60X-44315-A0	**REC60X-44315-A0**	JUNTA BOMBA AGUA	GASKET, WATER PUMP	GUARNIZIONE
14	90280-04M05	**REC90280-04M05**	CHAVETA	KEY, WOODRUFF	CHIAVETTA
15	93101-28M16	**REC93101-28M16**	RETÉN	OIL SEAL	PARAOLIO
16	90430-08020	**REC90430-08020**	JUNTA	GASKET, DRAIN FILL	GUARNIZIONE

V6 F225 - F250 - F300

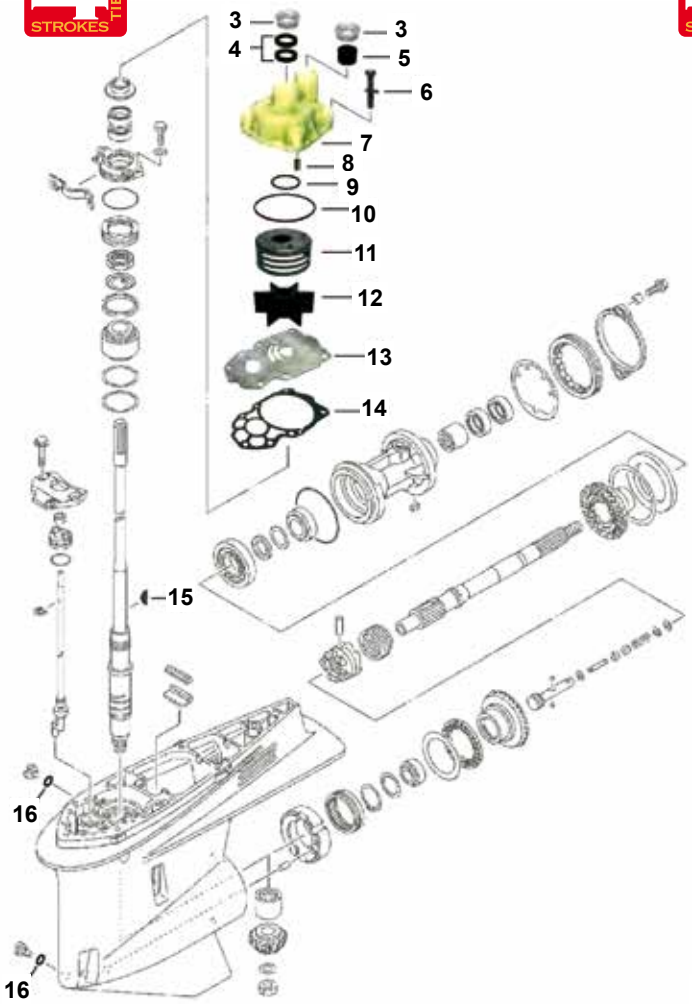

V8 F300 - F350

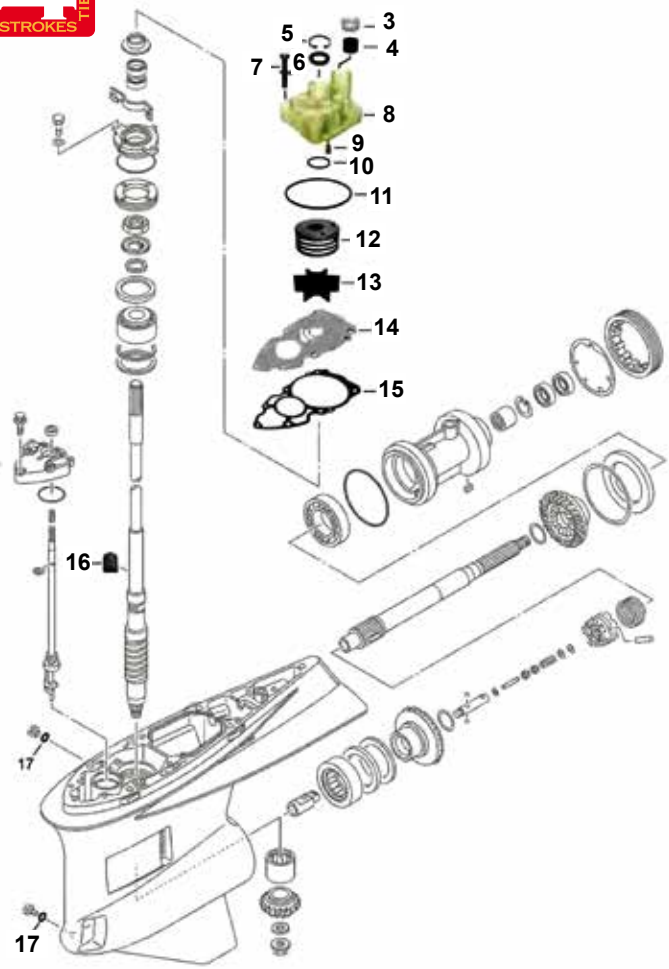

V6 F225 - F250 - F300

Nº	R.O./ OEM	Ref.	Descripción	Description	Descrizione
3	6AW-44312-00	**REC6AW-44312-00**	TAPA CUERPO BOMBA	COVER, WATER PUMP HOUSING	COPERCHIO CORPO POMPA
4	93140-22M07	**REC93140-22M07**	RETÉN	OIL SEAL	PARAOLIO
5	6AW-44365-00	**REC6AW-44365-00**	RETÉN AGUA	DAMPER	BOCCOLA ACQUA
6	90119-08M14	**REC90119-08M14**	TORNILLO CON ARANDELA	BOLT w WASHER	VITE
7	6CE-44311-01	**REC6CE-44311-01**	CUERPO BOMBA AGUA	WATER PUMP HOUSING	CORPO POMPA ACQUA
8	93606-12019	**REC93606-12019**	PIN	PIN, DOWELL	SPINOTTO
9	93210-37160	**REC93210-37160**	ARO TÓRICO	O-RING	O-RINH
10	93210-94003	**REC93210-94003**	ARO TÓRICO	O-RING	O-RING
11	6AW-44322-00	**REC6AW-44322-00**	CASQUILLO INOX.	PUMP CUP	POMPA
12	6CE-44352-00	**REC6CE-44352-00**	TURBINA	IMPELLER	GIRANTE
13	6CE-44323-00	**REC6CE-44323-00**	TAPA BOMBA	WEAR PLATE	PIASTRA POMPA
14	6CE-44315-00	**REC6CE-44315-00**	JUNTA BOMBA AGUA	GASKET, WATER PUMP	GUARNIZIONE
15	90280-04002	**REC90280-04002**	CHAVETA	KEY, WOODRUFF	CHIAVETTA
16	90430-08020	**REC90430-08020**	JUNTA	GASKET, DRAIN FILL	GUARNIZIONE

V8 F300 - F350

Nº	R.O./ OEM	Ref.	Descripción	Description	Descrizione
3	6AW-44312-00		TAPA CUERPO BOMBA	COVER, WATER PUMP HOUSING	COPERCHIO CORPO POMPA
4	6AW-44365-00		RETÉN AGUA	DAMPER	BOCCOLA
5	93420-35085		CLIP	DAMPER	BOCCOLA
6	93109-24001		RETÉN	OIL SEAL	PARAOLIO
7	90119-08M14	**REC90119-08M14**	TORNILLO CON ARANDELA	BOLT w/ WASHER	VITE + RONDELLA
8	6AW-44311-00		CUERPO BOMBA AGUA	WATER PUMP HOUSING	CORPO POMPA ACQUA
9	93606-12019	**REC93606-12019**	PIN	PIN, DOWELL	SPINOTTO
10	93210-37160	**REC93210-37160**	ARO TÓRICO	O-RING	O-RING
11	93210-94003		ARO TÓRICO	O-RING	O-RING
12	6AW-44322-00		CASQUILLO INOX.	PUMP CUP	POMPA
13	6AW-44352-00	**CEF500389N**	TURBINA	IMPELLER	GIRANTE
14	6AW-44323-00		TAPA BOMBA	WEAR PLATE	PIASTRA POMPA
15	6AW-44315-00		JUNTA BOMBA AGUA	GASKET, WATER PUMP	GUARNIZIONE
16	6AW-44336-00		CHAVETA	KEY	CHIAVETTA
17	90430-08020	**REC90430-08020**	JUNTA	GASKET, DRAIN FILL	GUARNIZIONE

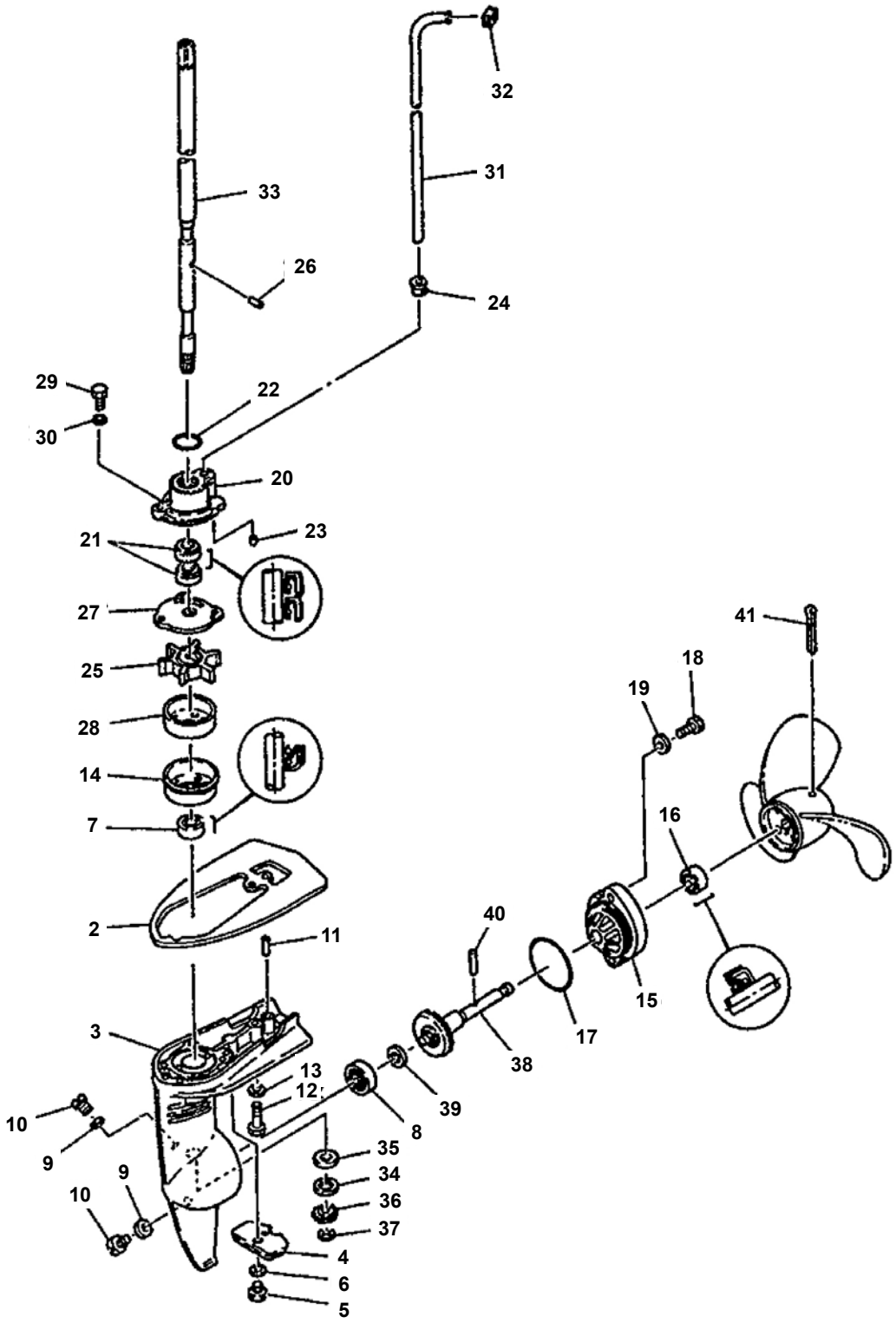

Ref.	R.O.
REC6A1-W0078-01	6A1-W0078-01

Kit reparación Bomba agua
Water Pump kit
Kit riparazione Pompa acqua

Ref.	R.O.
REC6A1-W0001-23	6A1-W0001-23

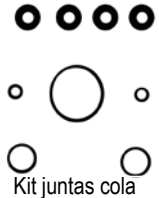

Kit juntas cola
Gearcase seal kit
Kit guarnizione piede

Nº	R.O./ OEM	Ref.	Descripción	Description	Descrizione
2	6A1-45181-00-4D		PLATO CAVITACION	PLATE	PIASTRA
3	6A1-45311-02-4D		CARTER INFERIOR	CASING, LOWER	CARTER INFERIORE
4	6L5-45251-02	**CM6L5-45251-02**	ÁNODO ZINC	ANODE	ANODO ZINCO
5	95895-06012		TORNILLO	BOLT, FLANGE	VITE
6	92990-06300	**PAGB/T861.1-87**	ARANDELA	WASHER	RONDELLA
7	93103-11051	**REC93103-11051**	RETÉN	OIL SEAL	PARAOLIO
8	93306-00001		RODAMIENTO	BEARING	CUSCINETTO
9	90430-08020	**REC90430-08020**	JUNTA	GASKET	GUARNIZIONE
10	90340-08M04	**PAF4-03000023**	TAPÓN	PLUG	TAPPO
11	93605-18M04		PIN	PIN	SPINOTTO
12	97095-06030	**REC97095-06030**	TORNILLO	BOLT	VITE
13	92995-06600	**PAGB/T97.1-85**	ARANDELA	WASHER	RONDELLA
14	6A1-44325-00P	**REC6A1-44325-00**	CUERPO INF. BOMBA	PROTECTOR	CORPO INF. POMPA
15	6A1-45361-01-4D		TAPA	CAP	COPERCHIO
16	93103-10052	**REC93103-10052**	RETÉN	OIL SEAL	PATRAOLIO
17	93210-42101	**REC93210-42101**	ARO TÓRICA	O-RING	O.RING
18	97090-06014		TORNILLO	BOLT	VITE
19	92990-06600		ARANDELA	WASHER	RONDELLA
20	6A1-44312-01-94		CUERPO BOMBA	COVER, WATER PUMP	CORPO POMPA
21	93101-11M44		RETÉN	OIL SEAL	PARAOLIO
22	93210-19123		ARO TÓRICO	O-RING	O-RING
23	93604-09068		PIN	PIN	SPINOTTO
24	646-44366-01		RETÉN TUBO AGUA	DAMPER	PARAOLIO TUBO ACQUA
25	646-44352-01	**REC646-44352-01**	TURBINA	IMPELLER	GIRANTE
26	93604-09066		PIN	PIN	SPINOTTO
27	646-44323-00	**REC646-44322-00**	PLATO BOMBA AGUA	OUTER PLATE	PIASTRA POMPA ACQUA
28	646-44322-00	**REC646-44322-00**	CASQUILLO INOX. BOMBA	INSERT	GHIERA INOX. POMPA
29	97095-05016		TORNILLO	BOLT	VITE
30	92995-06600	**PAGB/T97.1-85**	ARANDELA	WASHER	RONDELLA
31	6A1-44361-00		TUBO AGUA	TUBE, WATER	TUBO ACQUA
32	646-44365-00		RETÉN BOMBA	DAMPER	PARAOLIO POMPA
33	6A1-45510-01		EJE	DRIVE SHAFT ASSY	ASSE
34	90201-11M49		ARANDELA	WASHER	RONDELLA
35	646-45534-00-03		GRUESO	SHIM	SPESSORE
36	646-45551-00	**REC646-45551-00**	PIÑÓN	PINION	PIGNONE
37	93430-06005	**PAGB/T-896-86**	CLIP	CIRCLIP	CLIP
38	646-45560-00	**REC646-45560-00**	ENGRANAJE CON EJE	GEAR	IGRANAGGIO CON ASSE
39	646-45567-00-03		GRUESO	SHIM	SPESSORE
40	90250-03M10	**REC90250-03M10**	PASADOR SEGURIDAD	PIN	SPINOTTO
41	91490-30040	**REC91490-30040**	PASADOR ALETAS	PIN	SPINOTTO

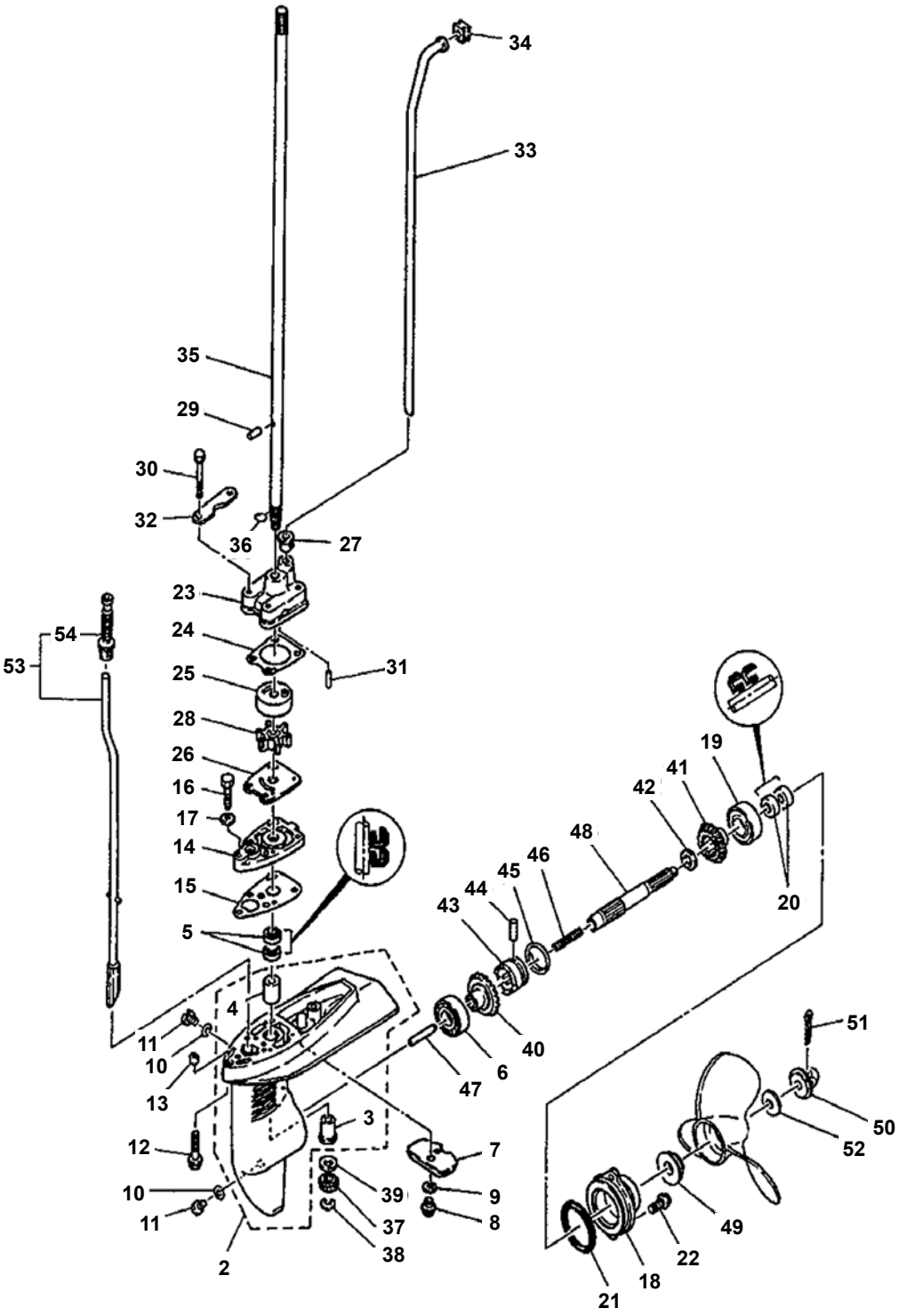

Ref.	R.O.
REC6E0-W0001-C1	6E0-W0001-C1

Kit reparación Bomba agua
Water Pump kit
Kit riparazione Pompa acqua

Nº	R.O./ OEM	Ref.	Descripción	Description	Descrizione
2	6E0-45311-02-4D		CARTER COLA	CASING, LOWER	CARTER PIEDE
3	6E0-45317-09	**REC6E0-45317-00**	CASQUILLO EJE	BUSHING	CAPPUCCIO ASSE
4	6E0-45316-09	**REC6E0-45316-00**	CASQUILLO EJE	BUSHING	CAPPUCCIO ASE
5	93101-10M14	**REC93101-10M14**	RETÉN	OIL SEAL	PARAOLIO
6	93306-004UO	**PAGB/T276-94**	RODAMIENTO	BEARING	CUSCINETTO
7	6L5-45251-03	**CM6L5-45251-03**	ÁNODO	ZINC ANODE	ANODO ZINCO
8	95895-06012		TORNILLO	BOLT	VITE
9	92990-06300		ARANDELA	WASHER	RONDELLA
10	90430-08020	**REC90430-08020**	JUNTA	GASKET	GUARNIZIONE
11	90340-08002	**PAF4-03000023**	TAPÓN	CARTER PLUG	TAPPO CARTER
12	90119-06M40		TORNILLO	BOLT	VITE
13	90387-06M14	**PAF4-00000001**	COLLAR	COLLAR	COLLARE
14	6E0-45321-01-5B	**PAF4-03000012**	PLACA	PLATE	PIASTRA
15	6E0-45315-A0	**PAF4-03000011**	JUNTA	PACKING	GUARNIZIONE
16	97095-06025		TORNILLO	BOLT	VITE
17	92995-06600		ARANDELA	WASHER	RONDELLA
18	6E0-45361-01-4D	**PAF4-03050001**	TAPA	CAP	COPERCHIO
19	93306-004UO	**PAGB/T276-6004-C2**	RODAMIENTO	BEARING	CUSCINETTO
20	93101-13M12	**REC93101-13M12**	RETÉN	OIL SEAL	PARAOLIO
21	93210-48214	**REC93210-48214**	ARO TÓRICO	O-RING	O-RING
22	95895-06016		TORNILLO	BOLT	VITE
23	6E0-44311-00	**PAF4-03000019**	CUERPO BOMBA	HOUSING	CORPO POMPA
24	6E0-44315-A0	**PAF4-03000018**	JUNTA BOMBA	GASKET	GUARNIZIONE POMPA
25	6E0-44322-02	**REC6E0-44322-02**	CASQUILLO	INSERT, CARTRIDGE	CAPPUCCIO
26	6E0-44323-00	**PAF4-03000015**	PLACA	OUTER PLATE	PIASTRA
27	6E0-44366-00	**PAF4-03000021**	RETÉN TUBO	DAMPER	PARAOLIO TUBO
28	6E0-44352-00	**REC6E0-44352-00**	IMPULSOR	IMPELLER	GIRANTE
29	93604-09066	**PAF-03000016**	PIN	PIN, DOWEL	SPINOTTO
30	97095-06045		TORNILLO	BOLT	VITE
31	93604-18080	**PAF4-03000013**	PIN	PIN, DOWEL	SPINOTTO
32	6E0-44328-00	**PAF4-03000020**	REFUERZO	PLATE	RIFORZO
33	6E0-44361-00		TUBO AGUA -eje corto-	TUBE, WATER	TUBO ACQUA
	6E0-44361-10		TUBO AGUA -eje largo-	TUBE, WATER	TUBO ACQUA
34	646-44365-00		RETÉN TUBO	DAMPER	PARAOLIO TUBO
35	6E0-45511-01	**REC6E0-45511-01**	EJE VERTICAL -eje corto-	SHAFT, DRIVE	ASSE VERTICALE
	6E0-45511-11	**REC6E0-45511-11**	EJE VERTICAL eje largo-	SHAFT, DRIVE	ASSE VERTICALE
36	90467-08M01	**PAF4-03000005**	CLIP	CLIP	CLIP
37	6E0-45551-00	**REC6E0-45551-00**	PIÑÓN	PINION	INGRANAGGIO
38	99001-06600	**PAGB/T896-86**	CERCLIP/	CIRCLIP	CLIP
39	90201-11M49	**PAF4-03000006**	ARANDELA	WASHER	RONDELLA
40	6E0-45560-00	**REC6E0-45560-00**	ENGRANAJE	GEAR	INGRANAGGIO
41	6E0-45570-00	**REC6E0-45570-00**	ENGRANAJE	GEAR	INGRANAGGIO
42	90201-13M50		ARANDELA	WASHER	RONDELLA
43	6E0-45631-00	**REC6E0-45631-00**	DESPLAZABLE	CLUTCH, DOG	SCORREVOLE
44	90250-05046	**REC90250-05046**	PASADOR	PIN STRAIGHT	SPINOTTO
45	654-45633-00		ARO SELECTOR	PING	O-RING SELETTORE
46	90501-10064		MUELLE	SPRING, COMPRESSION	MOLLA
47	654-45635-00		EMPUJADOR	PLUNGER	SPINTA
48	6E0-45611-01	**REC6E0-45611-01**	EJE HÉLICE	SHAFT, PROPELLER	ASSE ELICA
49	6L5-45987-01	**PAF4-03000025**	SEPARADOR	SPACER	DISTANZIALE
50	6L5-45616-02		TUERCA	NUT, PROPELLER	DADO
51	91490-25030	**PAGB/T91-1.6X12**	PASADOR ALETAS	PIN, COTTER	SPINOTTO
52	90201-08M54	**PAF4-03000026**	ARANDELA	WASHER	RONDELLA
53	6E0-44150-00		VARILLA SELECTOR -eje corto-	SHIFT CAM	ASTICELLA SELETTORE
	6E0-44150-10		VARILLA SELECTOR -eje largo-	SHIFT CAM	ASTICELLA SELETTORE
54	6G1-44147-00		ACOPLAMIENTO	BOOT, SHIFT ROD	ACCOPPIAMENTO

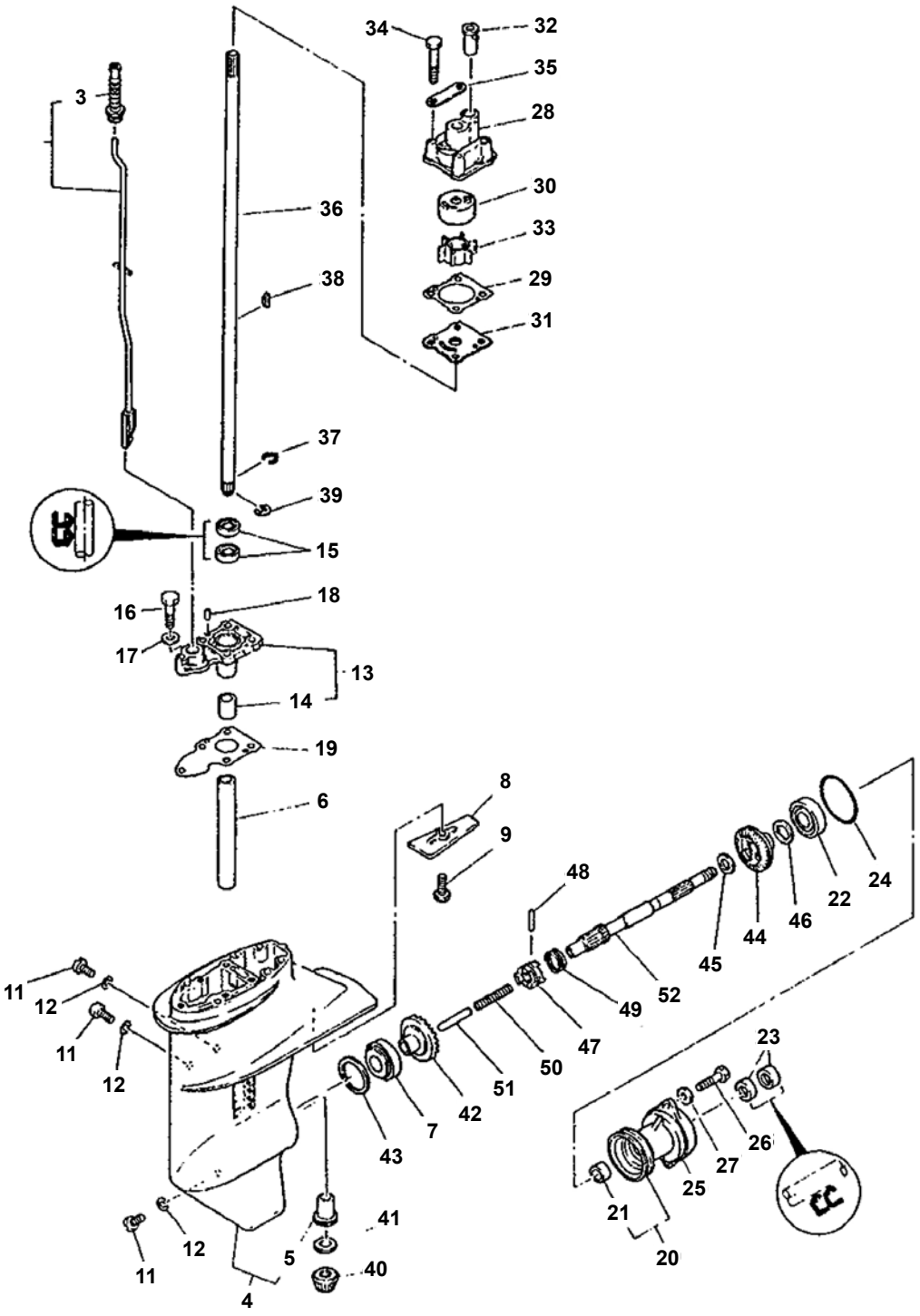

Ref.	R.O.
REC6G1-W0078-A1	6G1-W0078-A1

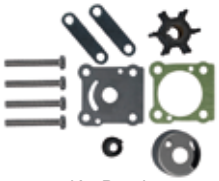

Kit reparación Bomba agua
Water Pump kit
Kit riparazione Pompa acqua

Ref.	R.O.
REC6G1-W0001-C1	6N0-W0001-20

Kit juntas cola
Gearcase seal kit
Kit guarnizione piede

Nº	R.O./ OEM	Ref.	Descripción	Description	Descrizione
1	6M8-G5300-00-4D		COLA COMPLETA	LOWER UNIT ASSY	PIEDE COMPLETO
	6M8-G5300-10-4D		COLA COMPLETA	LOWER UNIT ASSY	PIEDE COMPLETO
2	6N0-G4150-00		VARILLA DE CAMBIO	SHIFT CAM ASSY	ASTICELLA CAMBIO
	6N0-G4150-10		VARILLA DE CAMBIO	SHIFT CAM ASSY	ASTICELLA CAMBIO
3	6G1-44147-00		ACOPLE	BOOT, SHIFT ROD	RACCORDO
4	6N0-G5311-00-4D		CARTER	CASING, LOWER	CARTER
5	6G1-45317-09		CASQUILLO	BUSHING, DRIVE SHAFT	GHIERA
6	90387-14M49		TUBO GUÍA	COLLAR	TUBO GUIDA
7	93332-000V4		RODAMIENTO	BEARING	CUSCINETTO
8	CM6N0-G5251-00	**CM6N0-G5251-00**	ÁNODO	ANODE	ANODO
9	97095-06016		TORNILLO	BOLT	VITE
10	92990-06300		ARANDELA	WASHER	RONDELLA
11	6E0-45316-09	**PAF4-03000023**	TAPÓN	PLUG	TAPPO
12	90430-08801		JUNTA	GASKET	GUARNIZIONE
13	6G1-45331-01-5B		CUERPO	HOUSING, BEARING	CORPO
14	6G1-45316-09		CASQUILLO	BUSHING, DRIVE SHAFT	CAPPUCCIO ASSE
15	93101-11M23	**REC93101-11M23**	RETÉN	OIL SEAL	PARAOLIO
16	97095-06030	**REC97095-06030**	TORNILLO	BOLT	VITE
17	92995-06600		ARANDELA	WASHER	RONDELLA
18	93604-08062		PIN	PIN DOWEL	SPINOTTO
19	6G1-45315-A0	**REC6G1-45315-A0**	JUNTA	PACKING, LOWER CASING	GUARNIZIONE
20	6N0-G5361-00-4D		DIÁVOLO	CAP, LOWER CASING	COP. SCATOLA INGRANAGGI
21	6G1-45362-09		CASQUILLO	BUSHING	GHIERA
22	93306-004YH		RODAMIENTO	BEARING	CUSCINETTO
23	93101-15074	**REC93101-15074**	RETÉN	OIL SEAL	PARAOLIO
24	93210-49046	**REC93210-49046**	ARO TÓRICO	O-RING	O-RING
25	93210-53M08	**REC93210-53M08**	ARO TÓRICO	O-RING	O-RING
26	97095-06016		TORNILLO	BOLT	VITE
27	92995-06600		ARANDELA	WASHER	RONDELLA
28	6N0-G4311-00		CUERPO BOMBA	HOUSING, WATER PUMP	CORPO POMPA
29	6G1-44315-A0	**REC6G1-44315-A0**	JUNTA	GASKET, WATER PUMP	GUARNIZIONE
30	6G1-44322-00	**REC6G1-44322-00**	CASQUILLO	INSERT, CARTRIDGE	GHIERA
31	6G1-44323-00	**REC6G1-44323-00**	PLATO	OUTTER PLATE, CARTRIDGE	PIASTRA
32	647-44366-00	**REC647-44366-00**	CASQUILLO GOMA	DAMPER	GHIERA GOMA
33	6G1-44352-00	**REC6G1-44352-00**	TURBINA	IMPELLER	GIRANTE
34	97095-06045	**REC97095-06045**	TORNILLO	BOLT	VITE
35	6G1-44328-00	**REC6G1-44328-00**	REFUERZO	PLATE	RINFORZO
36	6N0-G5551-00		EJE	SHAFT, DRIVE	ASSE
37	6N0-G5551-10		CLIP	CLIP	CLIP
38	90280-03024	**REC90280-03024**	CHAVETA	KEY	CHIAVETTA
39	99001-06600	**REC99001-06600**	CERCLIP	CIRCLIP	CIRCLIP
40	6N0-G5551-00	**REC6N0-G5551-00**	PIÑÓN	PINION	PIGNONE
41	6G1-45533-00-19		GRUESO	SHIM	SPESSORE
42	6N0-G5560-00	**REC6N0-G5560-00**	ENGRANAJE	GEAR	GEAR
43	664-45587-01-10		GRUESO	SHIM	SPESSORE
44	6N0-G5571-00	**REC6N0-G5571-00**	PIÑÓN	GEAR	INGRANAGGIO
45	90201-15M89		ARANDELA	WASHER, PLATE	RONDELLA
46	647-45567-00		GRUESO	SHIM	SPESSORE
47	6G1-45631-00	**REC6G1-45631-00**	SELECTOR	CLUTCH, DOG	SELETTORE
48	6G1-45632-00		PASADOR	PIN CROSS	SPINOTTO
49	654-45633-00		ARILLO PRESIÓN	RING CROSS PIN	O-RING
50	90501-12M38		MUELLE	SPRING, COMPRESSION	MOLLA
51	6G1-45365-00		ÉMBOLO	PLUNGER, SHIFT	BULLONE
52	6G1-45611-01	**REC6G1-45611-01**	EJE HÉLICE	SHAFT, PROPELLER	ASSE ELICA

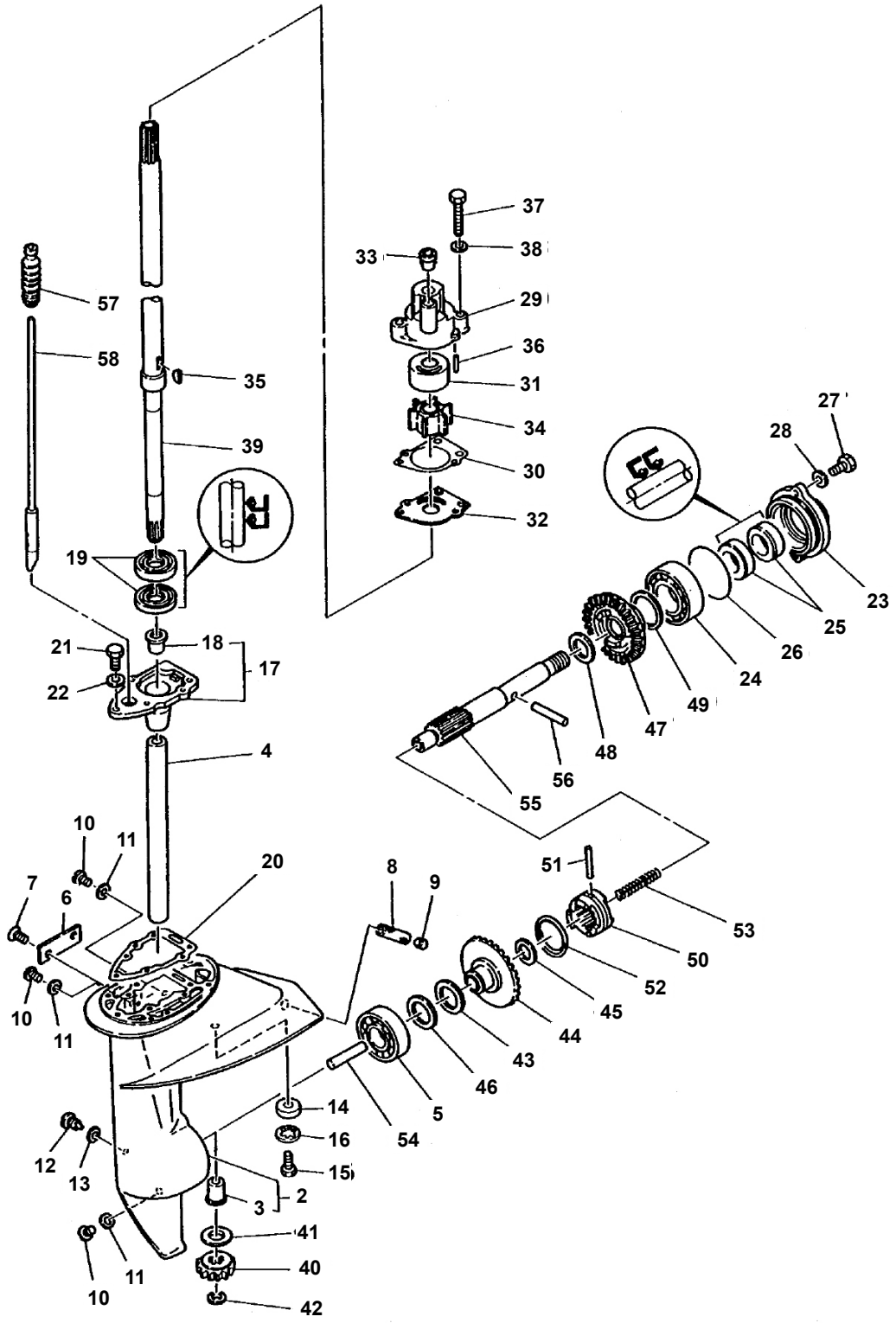
37
38
33
29
36
31
34
30
32
57
58
35
39
19
21
18
17
22
4
10
11
20
7
6
10
11
8
9
51
53
50
52
45
44
43
46
5
54
14
16
15
2
3
41
40
42
12
13
10
11
27
28
23
25
26
24
49
47
48
56
55

Nº	R.O./ OEM	Ref.	Descripción	Description	Descrizione
2	655-45310-02-4D		CARCASA INTERIOR COMPLETA	GEARCASE ASSY	PIEDE COMPLETA
3	647-45316-09	**REC647-45316-09**	CASQUILLO	DAMPER	GHIERA GOMA
4	90387-14108		ESPACIADOR	SPACER	SPESSORE
5	93306-00426		COJINETE	BEARING	CUSCINETTO
6	655-45214-02-4D		CUBIERTA ENTRADA DE AGUA	COVER	COPERCHIO ACQUA
7	98780-05016		TORNILLO	BOLT	VITE
8	626-45215-00		CASQUILLO	BUSH	GHIERA
9	90334-1008		TAPÓN	PLUG	TAPPO
10	90340-08M04		TORNILLO	BOLT	VITE
11	90430-08020		JUNTA	GASKET	GUARNIZIONE
12	90149-06003		TORNILLO	BOLT	VITE
13	90430-06M03	**REC90430-06M03**	JUNTA	GASKET	GUARNIZIONE
14	677-45251-00	**CM6E0-45251-11**	ÁNODO	ANODE	ANODO
15	95895-06012		TORNILLO	BOLT	VITE
16	92990-06300		ARANDELA	WASHER	RONDELLA
17	647-45331-00-94		CUERPO COJINETE	BEARING HOUSING	CORPO
18	647-45316-09	**REC647-45316-09**	CASQUILLO	BUSH	GHIERA
19	93101-18050	**REC93101-18050**	RETÉN ACEITE	OIL SEAL	PARAOLIO
20	677-45315-00		JUNTA	GASKET	GUARNIZIONE
21	97095-06020		PERNO	BOLT	VITE
22	92990-06600		ARANDELA	WASHER	RONDELLA
23	655-45361-02-4D		DIÁBOLO	HOUSING, BEARING	COP. CASSA INGRANAGGI
24	93306-00519	**REC93306-00519**	COJINETE	BEARING	CUSCINETTO
25	93101-15074	**REC93101-15074**	RETÉN ACEITE	OIL SEAL	PARAOLIO
26	93210-58677	**REC93210-58677**	ARO	O-RING	O-RING
27	97095-06020		PERNO	BOLT	VITE
28	92990-06600		ARANDELA	WASHER	RONDELLA
29	655-44311-03		BOMBA DE AGUA	WATER PUMP	POMPA ACQUA
30	655-44315-00		JUNTA	GASKET	GUARNIZIONE
31	650-44322-01		CASQUILLO	BUSH	GHIERA
32	655-44323-01		PLATO BOMBA	PALTE, WATER PUMP	PIASTRA POMPA
33	647-44366-00	**REC647-44366-00**	GOMA	RUBER BAND	GOMMA
34	662-44352-01	**REC662-44352-01**	IMPULSOR	IMPELLER	GIRANTE
35	90280-03024	**REC90280-03024**	CHAVETA	KEY	CHIAVETTA
36	93604-18080		PASADOR	PIN	SPINOTTO
37	97095-06040		PERNO	BOLT	VITE
38	92990-06600		ARANDELA	WASHER	RONDELLA
39	655-45501-10		TRANSMISIÓN	TRANSMITION	TRANSMISIONE
40	647-45551-00	**REC647-45551-00**	PIÑÓN	PINION	PIGNONE
41	647-45533-00-08		GRUESO	SHIM	SPESSORE
	647-45533-00-10		GRUESO	SHIM	SPESSORE
	647-45533-00-12		GRUESO	SHIM	SPESSORE
	647-45533-00-14		GRUESO	SHIM	SPESSORE
42	99080-07600		TUERCA	NUT	DADO
43	624-45567-00-03		GRUESO	SHIM	SPESSORE
	624-45567-00-05		GRUESO	SHIM	SPESSORE
44	647-45560-00	**REC647-45560-00**	ENGRANAJE	GEAR	INGRANAGGIO
45	90201-13198		ARANDELA	WASHER	RONDELLA
46	647-45567-00		GRUESO	SHIM	SPESSORE
47	647-45570-01	**REC647-45570-00**	ENGRANAJE	GEAR	INGRANAGGIO
48	90201-15229		ARANDELA	WASHER	RONDELLA
49	626-45577-00-01		GRUESO	SHIM	SPESSORE
	626-45577-00-03		GRUESO	SHIM	SPESSORE
	626-45577-00-05		GRUESO	SHIM	SPESSORE
50	655-45631-00		SELECTOR	CLUTCH	SELETTORE
51	93605-29098		PASADOR	PIN	SPINOTTO
52	93440-30040		MUELLE SELECTOR	CLUTCH SPRING	MOLLA
53	90501-10064		MUELLE COMPRESIÓN	SPRING	MOLLA
54	654-45635-00		BULÓN	PLUNGER	BULLONE
55	677-45611-01		HÉLICE	PROPELLER	ELICA
56	90250-05036	**REC90250-05036**	PASADOR	PIN	SPINOTTO
57	6G1-44147-00		FUELLE EJE	BELLOWS SHAFT	SOFFIETTO ASSE
58	655-44150-10		EJE SELECTOR	ROD, SHIFT	ASSE SELETTORE

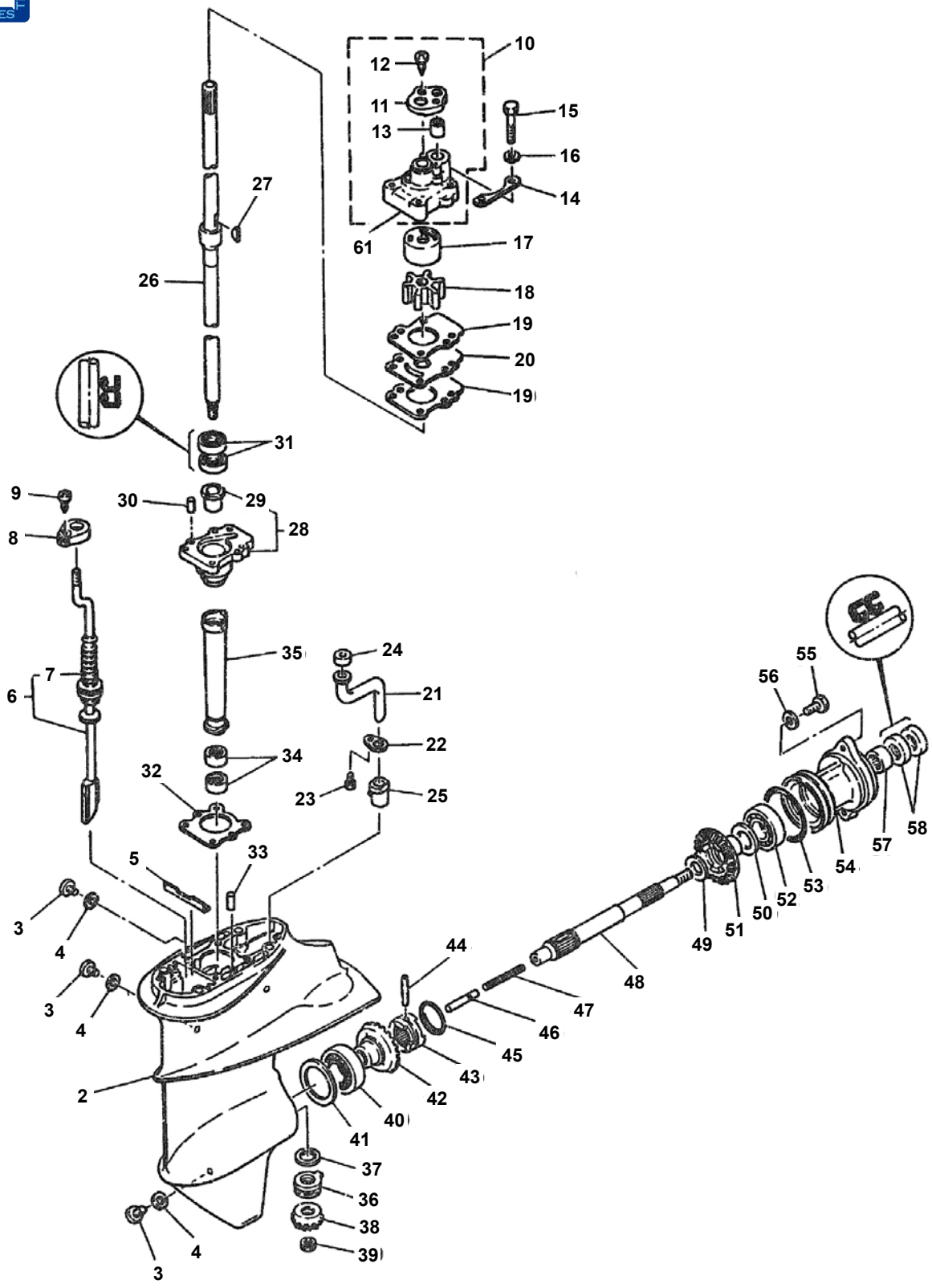

Ref.	R.O.
REC682-W0078-A1	682-W0078-A1

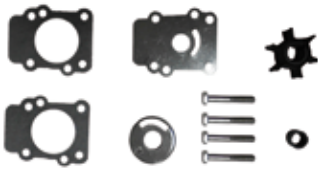

Kit reparación Bomba agua
Water Pump kit
Kit riparazione Pompa acqua

60

Ref.	R.O.
REC683-W0001-21	683-W0001-21

Kit juntas cola
Gearcase seal kit
Kit guarnizione piede

59

Nº	R.O./ OEM	Ref.	Descripción	Description	Descrizione
2	6E7-45311-00-EJ		CARCASA	CASING LOWER	CARTER PIEDE
3	90340-08014	**REC90340-08014**	TAPÓN	PLUG, STRAIGHT SCREW	TAPPO
4	90430-08020		JUNTA	GASKET	GUARNIZIONE
5	682-45376-01		GUÍA RETÉN	GUIDE, SEAL DAMPER	GUIDA BOCCOLA
6	682-44150-00		EJE SELECTOR	SHIFT CAMP ASSY	ASSE SELETTORE
7	682-44147-00	**REC682-44147-00**	TAPÓN GUÍA	BOOT, SHIFT ROD	TAPPO GUIDA
8	682-44176-00		SOPORTE	BRACKET	SUPPORTO
9	97780-50510		TORNILLO	SCREW, TAPPING	VITE
10	682-44300-01		CUERPO BOMBA AGUA	HOUSING WATER PUMP ASSY	CORPO POMPA ACQUA
11	682-44312-00		TAPA CUERPO BOMBA AGUA	COVER, WATER PUMP HOUSING	COPERCHIO CORPO ACQUA
12	97780-40112		TORNILLO	SCREW, TAPPING	VITE
13	682-44365-00	**REC682-44365-00**	CASQUILLO GOMA	DAMPER, WATER SEAL	GHIERA GOMA
14	682-44328-00		PLATO	PLATE	PIASTRA
15	947395-06040		TORNILLO	BOLT	VITE
16	92990-06200		ARANDELA	WASHER, PLAIN	RONDELLA
17	682-44322-00	**REC682-44322-00**	CASQUILLO INOX.	INSERT, CARTRIDGE	GHIERA INOX.
18	682-44352-00	**REC682-44352-01**	TURBINA	IMPELLER	GIRANTE
19	682-44315-00	**REC682-44315-00**	JUNTA	GASKET, WATER PUMP	GUARNIZIONE
20	682-44323-00	**REC682-44323-40**	PLATO	OUTER PLATE, CARTRIDGE	PIASTRA
21	683-44362-01		TUBO AGUA	TUBE, WATER	TUBO ACQUA
22	683-44373-00		PLATO AGUA	SET PLATE, WATER PLATE	PIASTRA ACQUA
23	97395-06010		TORNILLO	BOLT	VITE
24	683-44365-01		CASQUILLO GOMA	DAMPER, WATER SEAL	GHIERA GOMMA
25	6E7-44366-00		CASQUILLO GOMA	DAMPER, WATER SEAL	GHIERA GOMMA
26	6E7-45501-00	**REC6E7-45501-00**	EJE	DRIVE SHAFT COMP.	ASSE VERTICALE
	6E7-45501-10	**REC6E7-45501-11**	EJE	DRIVE SHAFT COMP.	ASSE VERTICALE
27	90280-03024	**REC90280-03024**	CHAVETA	KEY, WOODRUFF	CHIAVETTA
28	6E7-45331-00-9M	**REC6E7-45331-00-CA**	RODAMIENTO	HOUSING, BEARING	CUSCINETTO
29	626-45316-09	**REC626-45316-09**	CASQUILLO	BUSHING, DRIVE SHAFT	GHIERA
30	93606-12019	**REC93606-12019**	PIN	PIN, DOWEL	SPINOTTO
31	93101-20048	**REC93101-20048**	RETÉN	OIL SEAL	PARAOLIO
32	683-45315-00	**REC683-45315-A0**	JUNTA	PACKING, LOWER CASING	GUARNIZIONE
33	93604-08062		PIN	PIN, DOWEL	SPINOTTO
34	93315-314V0		RODAMIENTO	BEARING	CUSCINETTO
35	6E7-45536-00		CAMISA EJE	SLEEVE, DRIVE SHAFT	TUBO GUIDA
36	93341-214U1	**REC93341-214U1**	RODAMIENTO	BEARING	CUSCINETTO
37	6E7-45587-00-05		GRUESO	SHIM (t:0.05mm)	SPESSORE
	6E7-45587-00-08		GRUESO	SHIM (t:0.08mm)	SPESSORE
	6E7-45587-00-12		GRUESO	SHIM (t:0.12mm)	SPESSORE
	6E7-45587-00-30		GRUESO	SHIM (t:0.30mm)	SPESSORE
	6E7-45587-00-50		GRUESO	SHIM (t:0.50mm)	SPESSORE
38	6E7-45551-00	**REC6E7-45551-00**	PIÑÓN	PINION	PIGNONE
39	90179-08M06	**REC90179-08M06**	TUERCA	NUT	DADO
40	93332-00005	**REC93332-00005**	RODAMIENTO	BEARING	CUSCINETTO
41	664-45567-00-05		GRUESO	SHIM (t:0.05mm)	SPESSORE
	664-45567-00-08		GRUESO	SHIM (t:0.08mm)	SPESSORE
	664-45567-00-12		GRUESO	SHIM (t:0.12mm)	SPESSORE
	664-45567-00-30		GRUESO	SHIM (t:0.30mm)	SPESSORE
	664-45567-00-50		GRUESO	SHIM (t:0.50mm)	SPESSORE
42	6E7-45560-00	**REC6E7-45560-00**	ENGRANAJE	GEAR	INGRANAGGIO
43	682-45631-00	**REC682-45631-00**	SELECTOR	CLUTCH, DOG	SELETTORE
44	90250-05010	**REC90250-05010**	PASADOR	PIN, STRAIGHT	SPINOTTO
45	648-45633-00	**REC648-45633-00**	ANILLO	RING, CROSS PIN	O-RING
46	650-45635-00	**REC650-45635-00**	PISTÓN	PLUNGER, SHIFT	PISTONE
47	90501-14M06	**REC90501-14M06**	MUELLE	SPRING, COMPRESSION	MOLLA
48	683-45611-00	**REC683-45611-00**	EJE HÉLICE	SHAFT, PROPELLER	ASSE ELICA
49	90201-17682	**REC90201-17682**	ARANDELA	WASHER, PLATE	RONDELLA
50	626-45577-00-01		GRUESO	SHIM (t:0.10mm)	SPESSORE
	626-45577-00-03		GRUESO	SHIM (t:0.30mm)	SPESSORE
	626-45577-00-05		GRUESO	SHIM (T:0.50mm)	SPESSORE
51	6E7-45571-00	**REC6E7-45570-00**	ENGRANAJE	GEAR	INGRANAGGIO
52	93306-00501	**REC93306-00501**	RODAMIENTO	BEARING	CUSCINETTO
53	93210-57M09	**REC93210-57M09**	ARO TÓRICO	O-RING	O-RING
54	683-45361-00-EJ	**REC683-45361-01-4D**	DIÁBOLO	CAP, LOWER CASING	COP. CASSA INGRANAGGI
55	97395-06020		TORNILLO	BOLT	VITE
56	92990-06600		ARANDELA	WASHER, PLATE	RONDELLA
57	93315-317U2	**REC93315-317U2**	RODAMIENTO	BEARING	CUSCINETTO
58	93101-17054	**REC93101-17054**	RETÉN	OIL SEAL	PARAOLIO
59	683-W0001-21	**REC683-W0001-21**	KIT JUNTAS COLA	LOWER UNIT GASKET KIT	KIT GUARNIZIONE
60	682-W0078-00	**REC682-W0078-00**	KIT BOMBA AGUA	WATER PUMP REPAIR KIT	KIT POMPA ACQUA
61	682-443232-40	**REC682-44323-40**	CUERPO BOMBA AGUA	WATER PUMP HOUSING	CORPO POMA ACQUA

9.9C/F/FMH/MSH/MH/MHH - 13.5AMH
15FE/FMH/F/MSH/MH - E15C

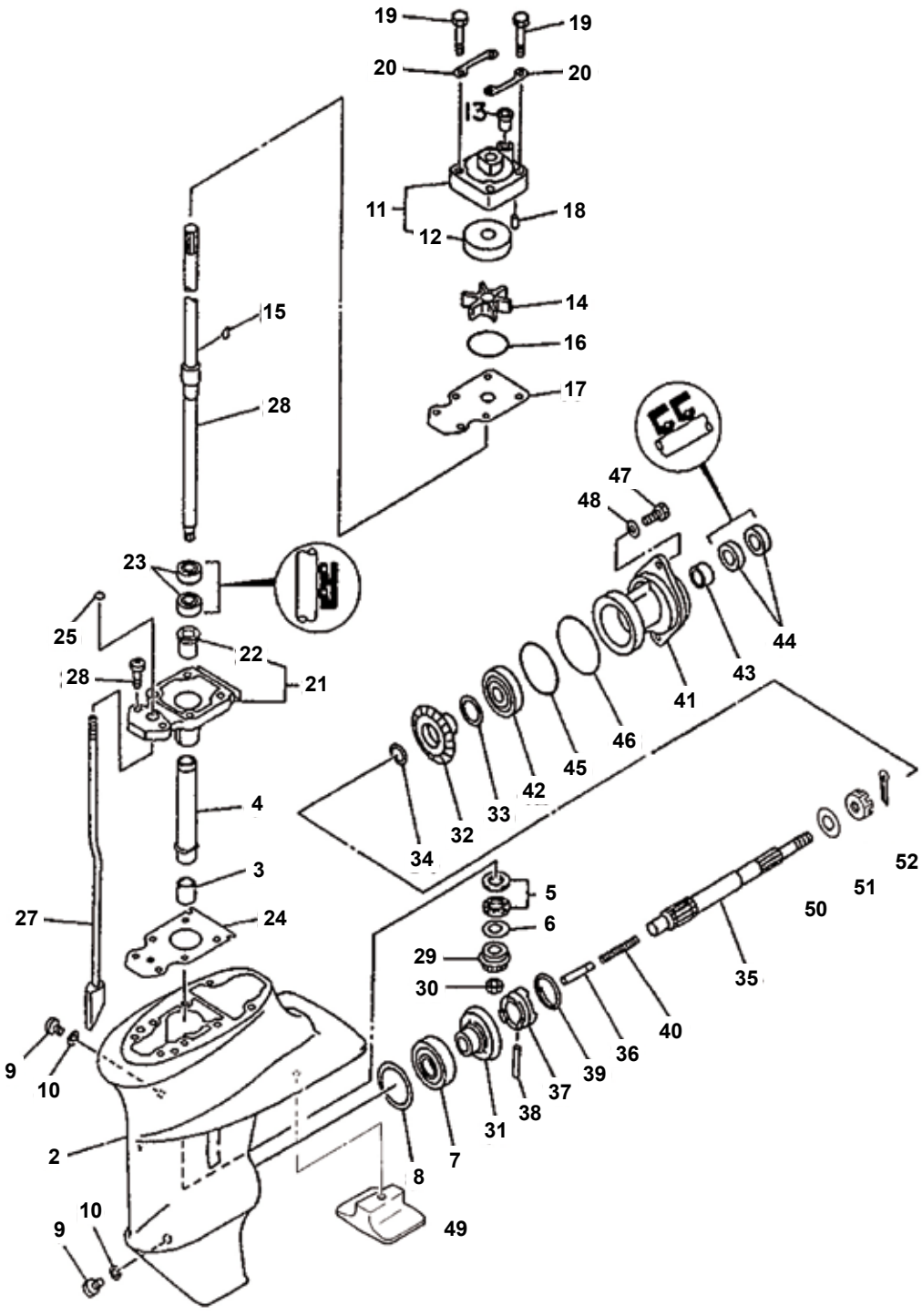

Ref.	R.O.
REC63V-W0078-01	63V-W0078-01

Kit reparación Bomba agua
Water Pump kit
Kit riparazione Pompa acqua

Ref.	R.O.
REC63V-W0001-22	63V-W0001-22

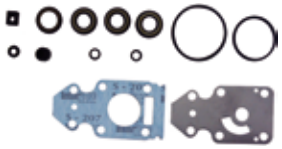

Kit juntas cola
Gearcase seal kit
Kit guarnizione piede

Nº	R.O. / OEM	Ref.	Descripción	Description	Descrizione
2	63V-45311-01-4D		CARTER	CASTING, LOWER	CARTER
3	93315-314V8	**REC93315-314V8**	RODAMIENTO	BEARING	CUSCINETTO
4	63V-45536-00	**PAF15-06000006**	TUBO GUÍA	SLEEVE, DRIVE SHAFT	TUBO GUIDA
5	93341-41414	**REC93341-41414**	RODAMIENTO	BEARING	CUSCINETTO
6	6E8-45587-10-13	**PAF15-06000008**	GRUESO	SHIM (t:1.13mm)	SPESSORE
7	93332-00005	**REC93332-00005**	RODAMIENTO	BEARING	CUSCINETTO
8	664-45567-01-10	**PAF15-06000010-1**	GRUESO	SHIM (t:0.10mm)	SPESSORE
9	90340-08002	**PAF4-03000023**	TAPÓN	PLUG, STRAIGHT SCREW	TAPPO
10	90430-08020	**REC90430-08020**	JUNTA	GASKET	GUARNIZIONE
11	63V-44301-00	**REC63V-44301-00**	CUERPO BOMBA	WATER PUMP HOUSE	CORPO POMPA
12	63V-44322-00	**REC63V-44322-00**	CASQUILLO INOX.	INSERT, CARTDRIGE	GHIERA INOX.
13	647-44366-00	**REC647-44366-00**	CASQUILLO JUNTA	DAMPER, WATER SEAL	BOCCOLA
14	63V-44352-01	**REC63V-44352-01**	TURBINA	IMPELLER	GIRANTE
15	63V44338-00	**PAF15-06000013**	CHAVETA	KEY, WOODRUFF	CHIAVETTA
16	93210-44398	**PAJA50F404-96**	ARO TÓRICO	O-RING	O-RING
17	63V-44323-00	**REC63V-44323-00**	PLATO BOMBA	OUTER PLATE	PIASTRA POMPA
18	93604-12M07	**PAF15-00000013**	PIN CENTRADOR	PIN, DOWEL	SPINOTTO
19	97080-08045	**REC97080-08045**	TORNILLO	BOLT	VITE
20	63V-44328-00	**PAF15-06000014**	REFUERZO	PLATE	RINFORZO
21	63V-45331-00-5B	**REC63V-45331-00-5B**	CUERPO RODAMIENTO	HOUSING	SEDE CUSCINETTO
22	90381-14020	**PAF15-06020002**	CASQUILLO	BUSH, SOLID	BOCCOLA
23	93101-20048	**REC93101-20048**	RETÉN	OIL SEAL	PARAOLIO
24	63V-45315-A0	**REC63V-45315-A0**	JUNTA	PACKING, LOWER CASING	GUARNIZIONE
25	93210-06ME6	**REC93210-06ME6**	ARO TÓRICO	O-RING	O-RING
26	97080-08025		TORNILLO	BOLT	VITE
27	63V-44150-00	**PAF15-06030000S**	EJE SELECTOR -eje corto-	SHIFT CAM ASSY	ASSE SELETTORE
	63V-44150-10	**PAF15-06030000**	EJE SELECTOR -eje largo-	SHIFT CAM ASSY	ASSE SELETTORE
28	63V-45510-01	**REC63V-45510-01**	EJE VERTICAL -eje corto-	DRIVE SHAFT ASSY	ASSE VERTICALE
	63V-45510-11	**REC63V-45510-11**	EJE VERTICAL -eje largo-	DRIVE SHAFT ASSY	ASSE VERTICALE
29	63V-45551-00	**REC63V-45551-00**	ENGRANAJE	PINION	INGRANAGGIO
30	90179-08M06	**REC90179-08M06**	TUERCA	NUT	DADO
31	6E7-45560-01	**REC6E7-45560-01**	ENGRANAJE	GEAR	INGRANAGGIO
32	6E7-45571-00	**REC6E7-45570-00**	ENGRANAJE	GEAR	INGRANAGGIO
33	626-45577-00	**PAF15-06080006-1**	GRUESO	SHIM	SPESSORE
34	90201-17682	**REC90201-17682**	ARANDELA	WASHER, PLATE	RONDELLA
35	683-45611-00	**REC683-45611-00**	EJE HÉLICE	SHAFT, PROPELLER	ASSE ELICA
36	650-45635-00	**REC650-45635-00**	BULÓN	PLUNGER, SHIFT	BULLONE
37	682-45631-00	**REC682-45631-00**	DESPLAZABLE	CLUTCH DOG	SCORREVOLE
38	90250-05010	**REC90250-05010**	PASADOR SELECTOR	PIN, STRAIGHT	SPINOTTO SELETTORE
39	648-45633-00	**REC683-45361-02-94**	MUELLE SELECTOR	RING, CROSS PIN	MOLLA SELETTORE
40	90501-14M06	**PAF15-06070002**	MUELLE COMPRESIÓN	SPRING	MOLLA
41	683-45361-02-4D	**REC683-45361-0194**	DIÁBOLO CIERRE	CAP, LOWER CASING	CHIUSURA CASSA INGRANAGGI
42	93306-00501	**REC93306-00501**	RODAMIENTO	BEARING (B6005)	CUSCINETTO
43	93315-317U2	**REC93315-317U2**	RODAMIENTO	BEARING	CUSCINETTO
44	93101-17054	**REC93101-17054**	RETÉN	OIL SEAL	PARAOLIO
45	93210-57M09	**REC93210-57M09**	ARO TÓRICO	O-RING	O-RING
46	93210-56M80	**PAF15-06080003**	ARO TÓRICO	O-RING	O-RING
47	97095-06020		TORNILLO	BOLT	VITE
48	92995-06600	**PAGB/T97.1-85**	ARANDELA	WASHER	RONDELLA
49	61N-45251-01	**CM61N-45251-01**	ÁNODO	ANODE	ANODO
50	6E7-45987-01	**REC6E7-45987-01**	SEPARADOR	SPACER	DISTANZIALE
51	90171-10M01	**REC90171-10M01**	TUERCA HÉLICE	NUT, CASTLE	DADO ELICA
52	91490-30020	**REC91490-30020**	PASADOR ALETAS	PIN, COTTER	PIN ELICA

20C/CM - 25 D/DE - C25HP - 30A - C30

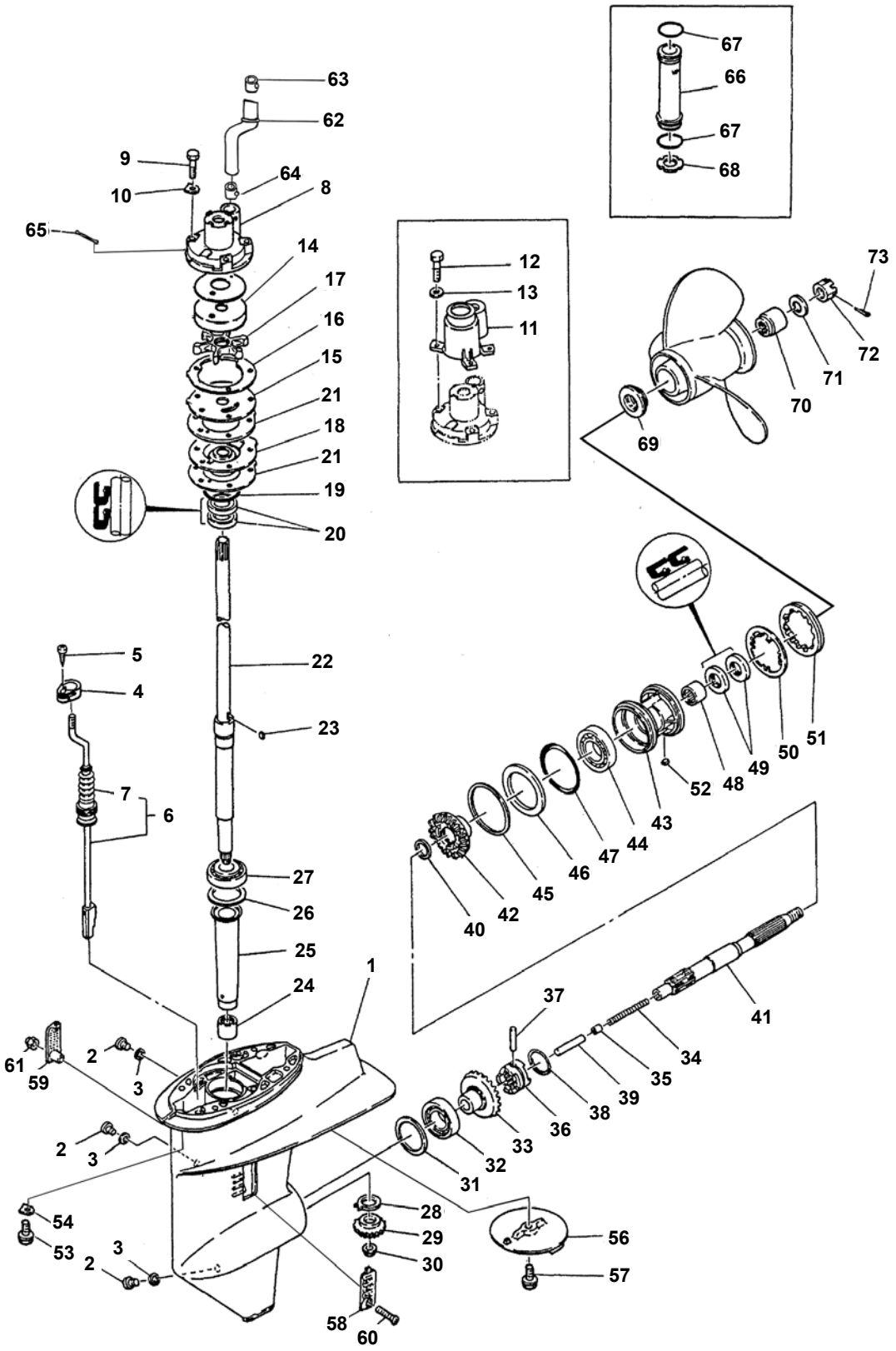

Ref.	R.O.
GLM12059	689-W0078-A6

Kit reparación Bomba agua
Water Pump kit
Kit riparazione Pompa acqua

Ref.	R.O.
REC689-W0001-21	689-W0001-21

Kit juntas cola
Gearcase seal kit
Kit guarnizione piede

Nº	R.O. / OEM	Ref.	Descripción	Description	Descrizione
1	689-45311-04-EK3		CARCASA	CASING	CARCASSA
2	90340-08M04	**PAF4-03000023**	TAPONES	PLUG	TAPPO
3	90430-08020	**REC90430-08020**	JUNTA TAPON	GASKET	GUARNIZIONE TAPPO
8	689-44311-03	**GLM12076**	CUERPO BOMBA AGUA	HOUSING W.P.	CORPO POMPA ACQUA
9	90101-06M56	**GLM22507**	TORNILLO CUERPO BOMBA	BOLT	VITE
10	90209-06M04		ARANDELA	WASER	RONDELLA
14	689-W4432-02	**REC689-W4432-01**	ACOPLE	INSERT CUP	ACCOPPIAMENTO
15	689-44323-03	**REC689-44323-00**	CHAPA	PLATE	PIASTRA
15	689-44323-02	**REC689-44323-00**	CHAPA	PLATE	PIASTRA
16	689-44324-A0	**GLM38109**	JUNTA, CHAPA	GASKET	GUARNIZIONE
17	689-44352-02-	**REC689-44352-02**	IMPULSOR	IMPELLER	GIRANTE
18	689-44325-02-5B		BASE, BOMBA AGUA	HOUSING	BASE, POMPA ACQUA
19	93210-40M10	**GLM84285**	ARO, BASE BOMBA	O-RING	O-RING
20	93101-22067	**REC93101-22067**	RETÉN ACEITE	OIL SEAL	PARAOLIO
21	689-44316-A0	**GLM38108**	JUNTA BASE	GASKET	GUARNIZIONE
21	689-44315-A0	**GLM38009**	JUNTA BASE	GASKET	GUARNIZIONE
22	689-45501-00		EJE (CORTO)	DRIVE SHAFT	ASSE VERTICALE
22	689-45501-10	**REC689-45501-10**	EJE (LARGO)	DRIVE SHAFT	ASSE VERTICALE
23	664-44338-00	**GLM89589**	CHAVETA	KEY	CHIAVETTA
24	93315-017U4	**REC93315-017U4**	COJINETE, PIÑÓN	BEARING	CUSCINETTO
25	689-45536-00		CAMISA	SLEEVE	ASSE
27	93332-000U4		COJINETE	BEARING	CUSCINETTO
28	664-45552-09		COJINETE	BEARING	CUSCINETTO
29	689-45551-00	**REC689-45551-00**	PIÑÓN	GEAR	PIGNONE
30	90179-09M02	**REC90179-09M02**	TUERCA, PIÑÓN	NUT	DADO
32	93332-00005	**REC93332-00005**	COJINETE	BEARING	CUSCINETTO
33	689-45560-00	**REC689-45560-00**	PIÑÓN	GEAR	PIGNONE
34	90501-10065		MUELLE	SPRING	MOLLA
35	648-45634-00		DESPLAZABLE	SLIDE	SCORREVOLE
36	664-45631-01	**REC664-45631-01**	SELECTOR	CLUTCH	SELETTORE
37	90250-05010	**REC90250-05010**	PASADOR	PIN	SPINOTTO
38	648-45633-00	**REC648-45633-00**	ARO, PASADOR	CROSS PIN	O-RING
39	648-45635-00	**REC648-45635-00**	PIVOTE	PIN	PERNO
40	90201-20417	**REC90201-20417**	ARANDELA	WASHER	RONDELLA
41	689-45611-00	**REC689-45611-00**	EJE HÉLICE	SHAFT PROPELLER	ASSE ELICA
42	689-45570-00	**REC689-45570-00**	PIÑÓN MARCHA ATRÁS	GEAR R.V	PIGNONE MARCIA INDIETRO
43	689-45331-01-94		COJINETE	BEARING	CUSCINETTO
44	93306-00612	**REC93306-00612**	COJINETE	BEARING	CUSCINETTO
46	664-45576-00		ARANDELA	WASHER	RONDELLA
47	93210-30MA3		ARO, COJINETE	O-RING	O-RING
48	93315-22004	**REC93315-22004**	COJINETE	BEARING	CUSCINETTO
49	93101-20M07	**REC93101-20M07**	RETÉN	OIL SEAL	PARAOLIO
50	902-14-45M02		ARANDELA	WASHER	RONDELLA
51	664-45384-00	**REC664-45384-00**	TUERCA	NUT	DADO
52	90282-04010	**REC90282-04010**	CHAVETA	KEY	CHIAVETTA
56	CM664-45371-01-00	**CM664-45371-01-00**	ÁNODO	ANODE	ANODO
57	90105-08M02		TORNILLO	BOLT	VITE
63	689-44366-00	**GLM38305**	RETÉN SUPERIOR TUBO DE AGUA	DUMPER WATER TUBE	PARAOLIO SUPERIORE TUBO ACQUA
64	626-44365-01	**GLM12869**	RETÉN SUPERIOR TUBO DE AGUA	DUMPER WATER TUBE	PARAOLIO SUPERIORE TUBO ACQUA
65	689-44314-00		ESPACIADOR	SPACER	DISTANZIALE
69	664-45987-00	**REC664-45987-00**	ESPACIADOR	SPACER	DISTANZIALE
70	689-45997-00	**REC689-45997-00**	ESPACIADOR	SAPCER	DISTANZIALE
71	92990-14200		ARANDELA	WASHER	RONDELLA
72	90171-14013	**REC90171-14013**	TUERCA HÉLICE	NUT	DADO
73	91490-30030	**REC91490-30030**	PASADOR	COTTER PIN	PIN

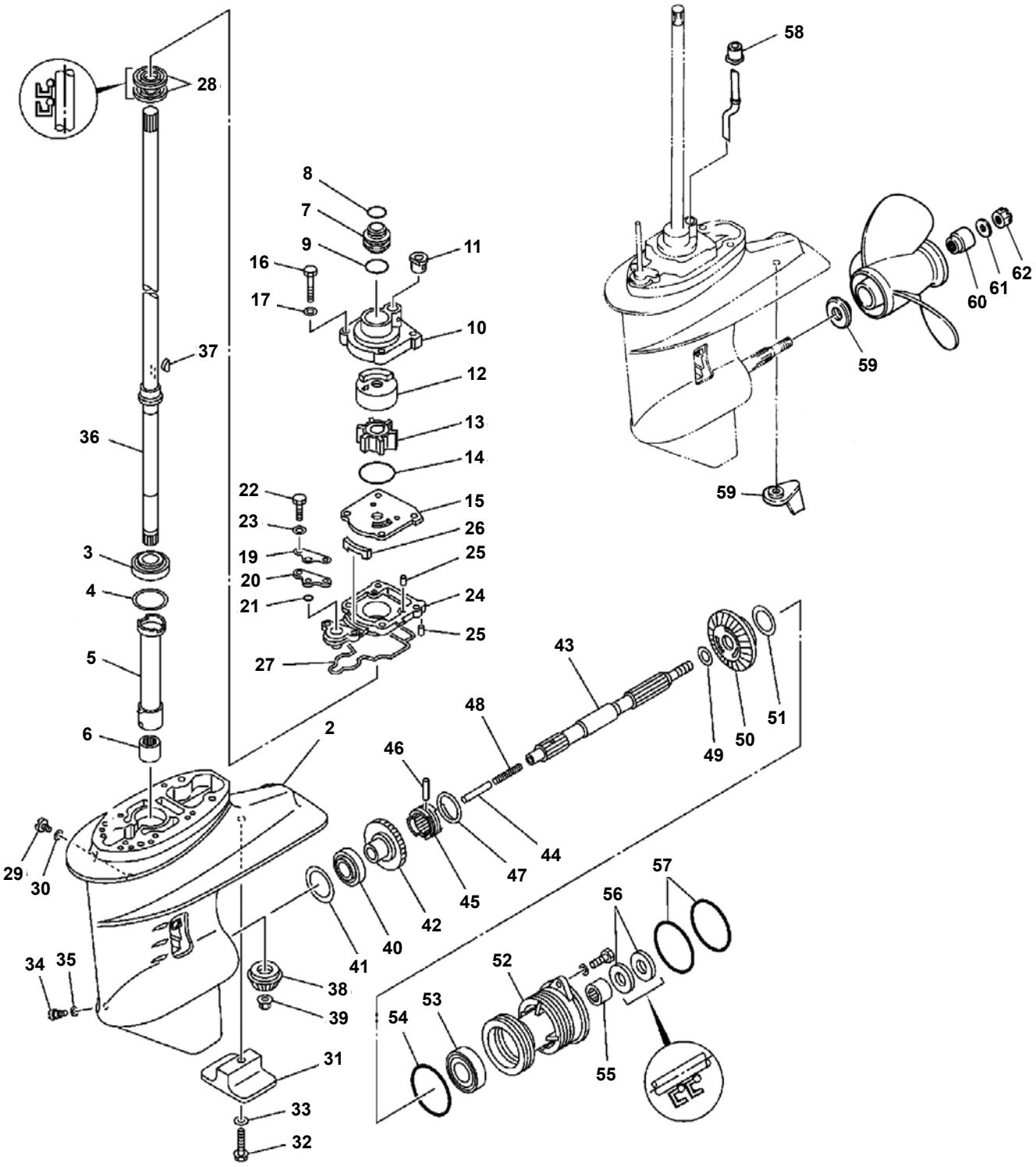

Ref.	R.O.
REC61N-W0001-E1	61N-W0001-E1

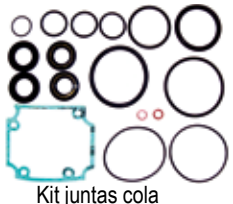

Kit juntas cola
Gearcase seal kit
Kit guarnizione piede

Nº	R.O. / OEM	Ref.	Descripción	Description	Descrizione
1	69P-45300-01-4D		COLA COMPLETA	LOWER UNIT ASSY	PIEDE COMPLETO
	69P-45300-11-4D		COLA COMPLETA	LOWER UNIT ASSY	PIEDE COMPLETO
2	61N-45311-02-4D		CARTER	CASING, LOWER	CARTER
3	93332-000WS	**REC93332-000W5**	RODAMIENTO	BEARING	CUSCINETTO
4	61N-45587-00-07	**PAF25-04000003-1**	GRUESO	SHIM (t:0.7mm)	SPESSORE
5	61N-45536-00	**PAF25-04000002**	TUBO GUÍA	SLEEVE, DRIVE SHAFT	TUBO GUIDA
6	93315-220V7	**REC93315-220V7**	RODAMIENTO	BEARING	CUSCINETTO
7	61N-44362-00	**PAF25-04000017S**	TUBO AGUA LARGO	LARGE WATER TUBE	TUBO ACQUA
7	61N-44362-10	**PAF25-04000017**	TUBO AGUA LARGO	LARGE WATER TUBE	TUBO ACQUA
8	93210-22164	**PAGB/T3452.1-25.8X2.65**	ARO TÓRICO	O-RING	O-RING
9	93210-26130	**PAGB/T3452.1-25.8X2.65**	ARO TÓRICO	O-RING	O-RING
10	61N-44311-01	**PAF25-04050001**	CUERPO BOMBA	HOUSING, WATER PUMP	CORPO POMPA
11	6L2-44367-00	**PAF25-04050004**	CASQUILLO	DAMPER WATER PIPE	BOCCOLA.
12	61N-44322-01	**REC61N-44322-00**	CASQUILLO INOX.	INSERT, CARTRIDGE	BOCCOLA INOX.
13	6H4-44352-02	**REC6H4-44352-02**	TURBINA	IMPELLER	GIRANTE
14	93210-45161	**PAF25-04050003**	ARO TÓRICO	O-RING	O-RING
15	61N-44323-00	**REC61N-44323-00**	PLATO BOMBA AGUA	OUTTER PLATE, CARTRIDGE	PIASTRA POMPA ACQUA
16	97095-06040	**GLM22428**	TORNILLO	BOLT	VITE
17	92995-06600	**PAGB/T97.1-6**	ARANDELA	WASHER	RONDELLA
19	61N-44176-00		SOPORTE	BRACKET	SUPPORTO
20	61N-45321-00		PLATO	PLATE	PIASTRA
21	93210-06ME6		ARO TÓRICO	O-RING	O-RING
22	97095-06025		TORNILLO	BOLT	VITE
23	92995-06600		ARANDELA	WASHER	RONDELLA
24	61N-45331-00-5B		CASQUILLO	HOUSING, BEARING	BOCCOLA
25	93604-10M03	**PAF25-04000007**	PIN CENTRADO	PIN, DOWEL	SPINOTTO
26	61N-45127-00	**PAF25-04000013**	RETÉN	SEAL	PARAOLIO
27	61N-45315-00	**PAF25-04000009**	JUNTA	PACKING, LOWER CASING	GUARNIZIONE
28	93101-22067	**REC93101-22067**	RETÉN	OIL SEAL	PARAOLIO
29	90340-08002	**REC90340-08002**	TAPÓN	PLUG, STRAIGHT SCREW	TAPPO
30	90430-08020	**GLM38015**	JUNTA	GASKET	GUARNIZIONE
31	61N-45251-01	**CM61N-45251-01**	ÁNODO	ANODE	ANODO
32	95895-06035		TORNILLO	BOLT, FLANGE	VITE
33	92990-06300		ARANDELA	WASHER, INTERNAL TOOTH	RONDELLA
34	688-45341-10	**REC688-45341-00**	TAPÓN VACIADO	PLUG, DRAIN	TAPPO
35	90430-08020	**GLM38015**	JUNTA	GASKET	GUARNIZIONE
36	61N-45510-00	**REC61N-45510-00**	EJE VERTICAL	DRIVE SHAFT ASSY	ASSE VERTICALE
	61N-45510-10	**REC61N-45510-10**	EJE VERTICAL	DRIVE SHAFT ASSY	ASSE VERTICALE
37	90280-03M03	**REC90280-03M03**	CHAVETA	KEY, WOODRUFF	CHIAVETTA
38	61N-45551-00	**REC61N-45551-00**	ENGRANAJE	PINION	PIGNONE
39	90179-10M14	**REC90179-10M14**	TUERCA	NUT	DADO
40	93332-00005	**REC93332-00005**	RODAMIENTO	BEARING	CUSCINETTO
41	6L2-45567-00-10	**PAF25-04000004-1**	GRUESO	SHIM (t:1.0mm)	SPESSORE
42	61N-45560-10	**REC61N-45560-10**	ENGRANAJE	GEAR	INGRANAGGIO
43	6L2-45611-00	**REC6L2-45611-00**	EJE HÉLICE	SHAFT, PROPELLER	ASSE ELICA
44	648-45635-00	**REC648-45635-00**	BULÓN	PLUNGER, SHIFT	BULLONE
45	664-45631-02	**REC664-45631-00**	DEAPLAZABLE	CLUTCH, DOG	SCORREVOLE
46	90250-05010	**REC90250-05010**	PASADOR	PIN, STRAIGHT	SPINOTTO
47	648-45633-00	**REC648-45633-00**	MUELLE	RING, CROSS PIN	MOLLA
48	90501-10065	**PAF25-04060002**	MUELLE COMPRESIÓN	SPRING, COMPRESSION	MOLLA
49	90201-20417	**REC90201-20417**	ARANDELA	WASHER, PLATE	RONDELLA
50	61N-45571-00	**REC61N-45570-00**	ENGRANAJE	GEAR	INGRANAGGIO
51	6L2-45577-00-10	**PAF25-04070005-1**	GRUESO	SHIM (t:1.0mm)	SPESSORE
52	61N-45361-01-4D	**PAF25-04070001**	DIÁBOLO	CAP, LOWER CASING	COP. CASSA INGRANAGGI
53	93306-00612	**REC93306-00612**	RODAMIENTO	BEARING	CUSCINETTO
54	93210-64ME7	**REC93210-64ME7**	ARO TÓRICO	O-RING	O-RING
55	93315-22004	**REC93315-22004**	RODAMIENTO	BEARING	CUSCINETTO
56	93101-20M07	**REC93101-20M07**	RETÉN	OIL SEAL	PARAOLIO
57	93210-65M50	**REC93210-65M50**	ARO TÓRICO	O-RING	O-RING
58	689-44366-00	**GLM38305**	CASQUILLO	DAMPER, WATER SEAL	BOCCOLA
59	61N-45371-00	**CM61N-453471-00**	ÁNODO ZINC	TAB-TRIM	ANODO ZINCO
60	6L2-45987-01	**REC6L2-45987-00**	SEPARADOR	SPACER	DISTANZIALE
61	689-45997-00	**REC689-45997-00**	SEPARADOR	SPACER	DISTANZIALE
62	92990-14200	**PAGB/9T97.1-14**	ARANDELA	WASHER, PLAIN	RONDELLA
63	90171-14013	**REC90171-14013**	TUERCA	NUT, CASTLE	DADO

Ref.	R.O.
GLM12285	6J8-W0078-A2

Kit reparación Bomba agua
Water Pump kit
Kit riparazione Pompa acqua

Ref.	R.O.
GLM87833	6J8-W0001-C2

Kit juntas cola
Gearcase seal kit
Kit guarnizione piede

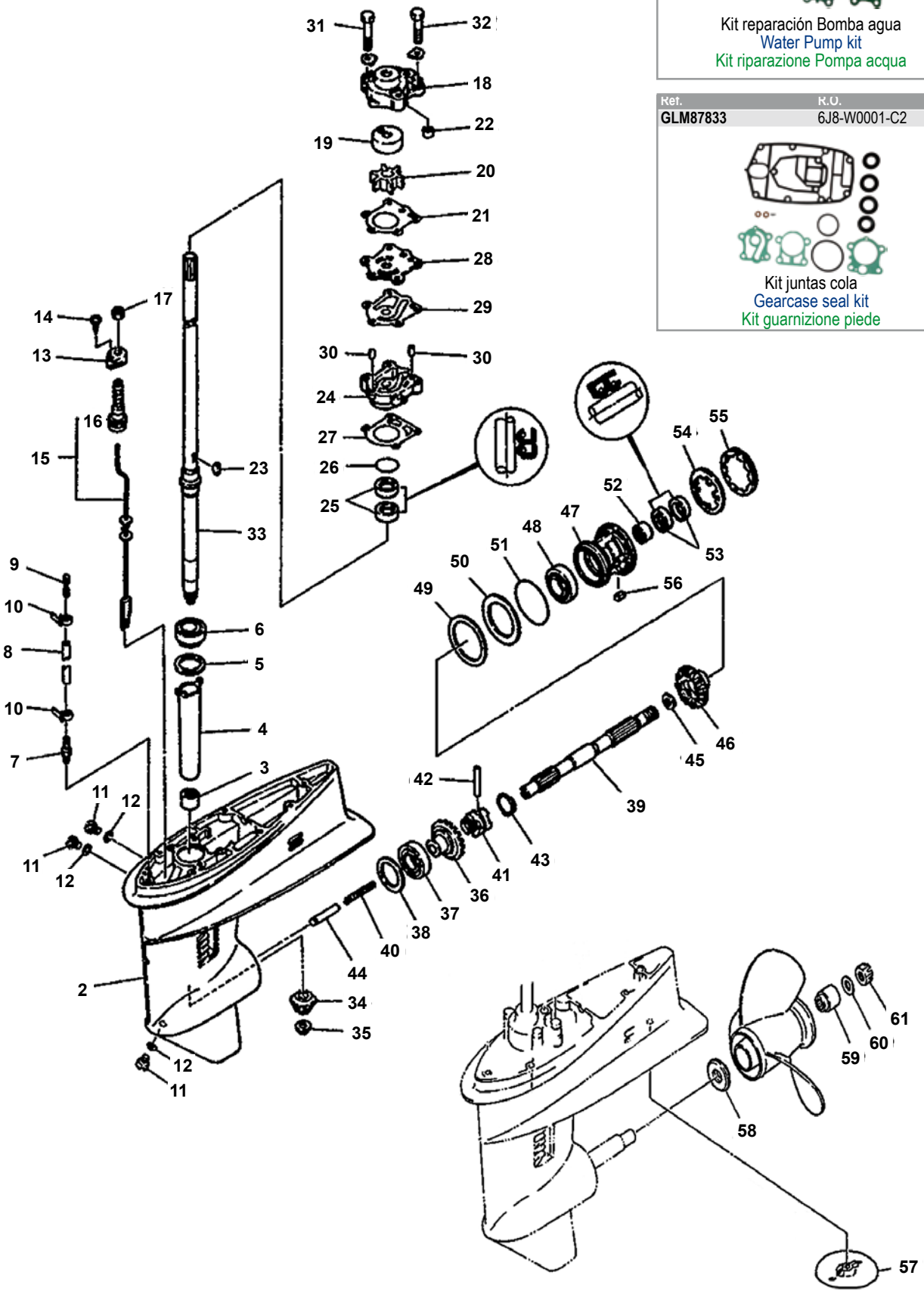

Nº	R.O. / OEM	Ref.	Descripción	Description	Descrizione
1	6J8-45300-04-4D		COLA COMPLETA	LOWER UNIT ASSY	PIEDE COMPLETO
	6J8-45300-14-4D		COLA COMPLETA	LOWER UNIT ASSY	PIEDE COMPLETO
2	6J8-45301-02-4D		CARTER	CASING, LOWER	CARTER
3	93315-220V7	**REC93315-220V7**	RODAMIENTO	BEARING	CUSCINETTO
4	6J8-45536-00		TUBO GUIA	SLEEVE, DRIVE SHAFT	TUBO GUIDA
5	663-45587-01		GRUESO	SHIM (t:0.10mm)	SPESSORE
6	93332-00001	**REC93332-00001**	RODAMIENTO	BEARING	CUSCINETTO
7	6E5-45378-00		RACORD	NIPPLE, HOSE	RACCORDO
8	90445-07ME9		TUBO	HOSE (L120)	TUBO
	90445-07M31		TUBO	HOSE (L120)	TUBO
9	6E5-83558-00		RACORD	END, NIPPLE	RACCORDO
10	90465-11M10		ABRAZADERA	CLAMP	FASCETTA
11	90340-08002	**REC90340-08014**	TAPÓN	PLUG, STRAIGHT SCREW	TAPPO
12	90430-08020	**REC90430-08020**	JUNTA	GASKET	GUARNIZIONE
13	682-44176-00		SOPORTE	BRACKET	SUPPORTO
14	97780-50510		TORNILLO	SCREW, TAPPING	VITE
15	6J8-44150-00		EJE SELECTOR	SHIFT CAM ASSY	ASSE SELETTORE
	6J8-44150-10		EJE SELECTOR	SHIFT CAM ASSY	ASSE SELETTORE
16	682-44147-00	**REC682-44147-00**	TAPÓN GUÍA	BOOT, SHIFT ROD	TAPPO
17	95380-06700		TUERCA	NUT	DADO
18	6J8-44311-00	**REC6J8-44311-00**	CUERPO BOMBA AGUA	HOUSING, WATER	CORPO POMPA ACQUA
19	663-44322-00	**REC663-44322-00**	CASQUILLO INOX	INSERT, CARTRIDGE	BOCCOLA INOX.
20	6H4-44352-02	**REC6H4-44352-02**	TURBINA	IMPELLER	GIRANTE
21	663-44315-A0	**REC663-44315-A0**	JUNTA	GASKET, WATER PUMP	GUARNIZIONE
22	663-44366-00	**REC663-44366-00**	CASQUILLO GOMA	DAMPER, WATER SEAL	BOCOLLA GOMMA
23	90280-03024	**REC90280-03024**	CHAVETA	KEY, WOODRUFF	CHIAVETTA
24	663-44341-00		TAPA INFERIOR, BOMBA	HOUSING	COPERCHIO INFERIORE POMPA
25	93101-23070	**REC93101-23070**	RETÉN	OIL SEAL	PARAOLIO
26	93210-41042	**REC93210-41042**	ARO TÓRICO	O-RING	O-RING
27	663-44316-A0	**REC663-44316-A0**	JUNTA	GASKET, WATER PUMP	GUARNIZIONE
28	663-44323-00	**REC663-44323-00**	PLATO BOMBA AGUA	OUTTER PLATE	PIASTRA POMPA ACQUA
29	663-44324-A0	**REC663-44324-00**	JUNTA	GASKET, CARTRIDGE	GUARNIZIONE
30	93604-08062		CENTRADOR	PIN, DOWEL	SPINOTTO
31	90119-08M13	**REC90119-08M13**	TORNILLO	BOLT, WITH WASHER	VITE
32	90119-08M34		TORNILLO	BOLT WITH WASHER	VITE
33	6J8-45501-00		EJE	DRIVE SHAFT COMP.	ASSE
	6J8-45501-10		EJE	DRIVE SHAFT COMP.	ASSE
34	6J8-45551-00		ENGRANAJE	PINION (13T)	PIGNONE
35	90179-10M14	**REC90179-10M14**	TUERCA	NUT	DADO
36	6J8-45560-00		ENGRANAJE	GEAR 1 (24T)	INGRANAGGIO
37	93332-000V6		RODAMIENTO	BEARING	CUSCINETTO
38	6J8-45567-01		GRUESO	SHIM	SPESSORE
39	6J8-45611-00		EJE	SHAFT, PROPELLER	ASSE ELICA
40	90501-10065	**PAF25-04060002**	MUELLE	SPRING, COMPRESSION	MOLLA
41	6J8-45631-00		DESPLAZABLE	CLUTCH DOG	SCORREVOLE
42	90250-05010	**REC90250-05010**	PASADOR	PIN, STRAIGHT	SPINOTTO
43	648-45633-00	**REC648-45633-00**	ARO	RING CROSS PIN	O-RING
44	6J8-45635-00		BULÓN	PLUNGER, SHIFT	BULLONE
45	90201-20417	**REC90201-20417**	ARANDELA	WASHER, PLATE	RONDELLA
46	6J8-45571-00		ENGRANAJE	GEAR 2 (24T)	INGRANAGGIO
47	689-45331-01-94		DIÁBOLO	HOUSING, BEARING	COP. CASSA INGRANAGGI
48	93306-00612	**REC93306-00612**	RODAMIENTO	BEARING	CUSCINETTO
49	664-45577-01		GRUESO	SHIM	SPESSORE
50	664-45576-00		ARANDELA	WASHER, THRUST	RONDELLA
51	93210-60MA3	**REC93210-60MA3**	ARO TÓRICO	O-RING	O-RING
52	93315-22004	**REC93315-22004**	RODAMIENTO	BEARING	CUSCINETTO
53	93101-20M07	**REC93101-20M07**	RETÉN	OIL SEAL	PARAOLIO
54	90214-45M02		ARANDELA	WASHER, CLAW	RONDELLA
55	664-45384-00	**REC664-45384-00**	TUERCA	NUT	DADO
56	90282-04010	**REC90282-04010**	CHAVETA	KEY, STRAIGHT	CHIAVETTA
57	664-45371-01	**CM664-45371-01**	ÁNODO DERIVA	TAB-TRIM	ANODO
58	6L2-45987-01	**REC6L2-45987-00**	DISTANCIADOR	SPACER	DISTANZIALE
59	689-45997-00	**REC689-45997-00**	DISTANCIADOR	SPACER	DISTANZIALE
60	92990-14200	**PAGB/T 97.1-14**	ARANDELA	WASHER, PLAIN	RONDELLA
61	90171-14013	**REC90171-14013**	TUERCA HÉLICE	NUT, CASTLE	DADO

25Q/QEO - 40HP N/H/HE/QE/JWH/QM/QWC
E40JMH - 50HP/ETN/D/DEO/DEMTO

Ref.	R.O.
REC6H4-W0078-00	6H4-W0078-A0

Kit reparación Bomba agua
Water Pump kit
Kit riparazione Pompa acqua

Ref.	R.O.
REC6H4-W0001-21	6H4-W0001-21

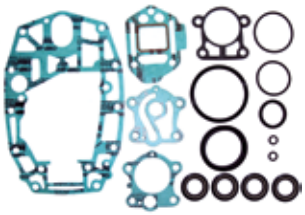

Kit juntas cola
Gearcase seal kit
Kit guarnizione piede

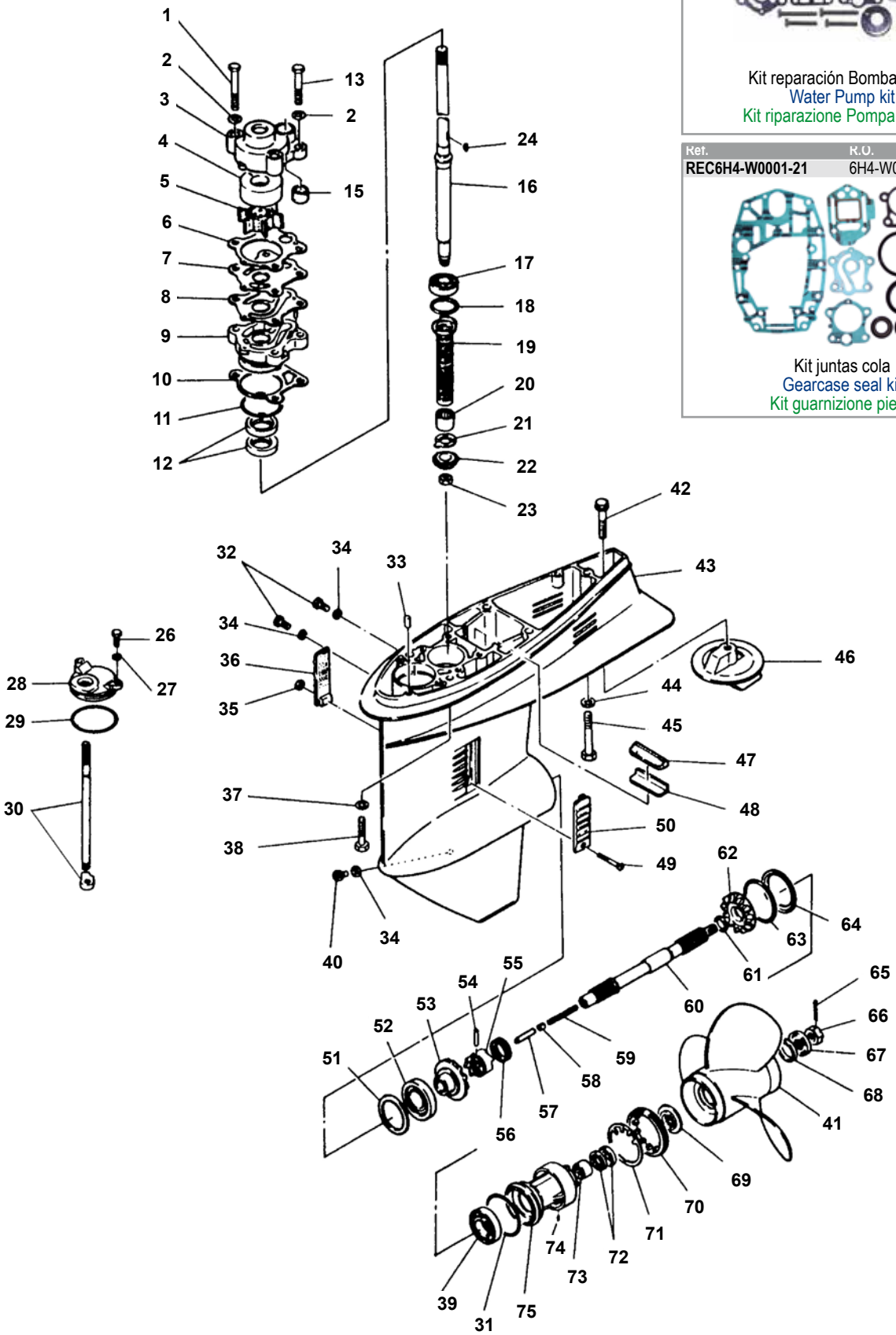

Nº	R.O. / OEM	Ref.	Descripción	Description	Descrizione
1	97395-08055	**REC97095-08055**	TORNILLO	BOLT	VITE
2	92990-08600		ARANDELA	WASHER	RONDELLA
3	663-44311-02	**REC663-44311-02**	CUERPO BOMBA AGUA	HOUSING WATER P.	CORPO POMPA ACQUA
4	663-44322-00	**REC663-44322-00**	CASQUILLO	INSERT CARTRIDGE	BOCCOLA
5	6H4-44352-02	**REC6H4-44352-02**	IMPULSOR	IMPELLER	GIRANTE
6	663-44315-A0	**REC663-44315-00**	JUNTA	GASKET	GUARNIZIONE
7	663-44323-00	**REC663-44323-00**	TAPA	OUTTER PLATE	TAPPO
8	663-44324-A0	**REC663-44324-00**	JUNTA	GASKET	GUARNIZIONE
9	663-44341-00		BASE BOMBA AGUA	HOUSING	BASE POMPA ACQUA
10	663-44316-A0	**REC663-44316-A0**	JUNTA BASE	GASKET	GUARNIZIONE
11	93210-41042	**REC93210-41042**	ARO, BASE BOMBA	O-RING	O-RING
12	93101-23070	**REC93101-23070**	RETÉN ACEITE	OIL SEAL	PARAOLIO
13	97395-08045	**REC97095-08045**	TORNILLO	BOLT	VITE
15	663-44366-00	**REC663-44366-00**	RETÉN ACEITE	OIL SEAL	PARAOLIO
16	6H4-45501-00		EJE (CORTO)	DRIVE SHAFT	ASSE VERTICALE
16	6H4-45501-10		EJE (LARGO)	DRIVE SHAFT	ASSE VERTICALE
17	93332-00079		COJINETE RODILLOS	BEARING	CUSCINETTO
19	6H4-45536-00		CAMISA, EJE	SLEEVE	CAMICIA
20	93315-32224	**REC93315-32224**	RODAMIENTO AGUJAS	BEARING	CUSCINETTO
21	663-45552-00	**REC663-45552-00**	COJINETE (HASTA 1998)	BEARING	CUSCINETTO
22	6H4-45551-00	**REC6H4-45551-00**	PIÑÓN	GEAR	PIGNONE
23	90170-12138	**REC90170-12138**	TUERCA	NUT	DADO
24	90280-03024	**REC90280-03024**	CHAVETA	KEY	CHIAVETTA
26	97095-06016		TORNILLO	BOLT	VITE
27	92990-06600		ARANDELA	WASHER	RONDELLA
28	6H4-45321-01		PLATO	CAP	PIASTRA
29	93210-49046	**REC93210-49046**	ARO PLATO	O-RING	O-RING
31	93210-66M98	**REC93210-66M98**	ARO	O-RING	O-RING
39	93306-00702	**REC93306-00702**	RODAMIENTO BOLAS	BEARING	CUSCINETTO
40	688-45341-00	**REC688-45341-00**	TAPÓN DRENAJE	PLUG	TAPPO
42	975755-08675		TORNILLO ÁNODO	BOLT	VITE
43	6H4-45301-01-EK		CARTER	CASING	CARTER
44	92990-08100		ARANDELA	WASHER	RONDELLA
45	97095-08085		TORNILLO	BOLT	VITE
46	664-45371-01	**CM664-45371-01**	ÁNODO	ANODE	ANODO
47	688-45375-00		RETÉN	OIL SEAL	PARAOLIO
51	6H4-45567-00		SUPLEMENTO	SHIM	SPESSORE
52	93332-000V4		COJINETE	BEARING	CUSCINETTO
53	6H4-45560-00	**REC6H4-45560-00**	PIÑÓN	GEAR	PIGNONE
54	90250-06023	**REC90250-06023**	PASADOR	PIN	SPINOTTO
55	663-45631-01	**REC663-45631-00**	DESPLAZABLE	CLUTCH	SCORREVOLE
56	663-45633-00	**REC663-45633-00**	ARO	SPING	O-RING
57	676-45635-00	**REC676-45635-00**	PIVOTE	PIN	SPINOTTO
58	663-45634-00	**REC663-45634-00**	CASQUILLO	SLIDE	BOCCOLA
59	90501-16M01		MUELLE	COMPRESSION SPING	MOLLA
60	679-45611-01	**REC679-45611-00**	EJE HÉLICE	SHAFT PROPELLER	ASSE ELICA
61	90201-22429	**REC90201-22429**	ARANDELA	WASHER	RONDELLA
62	6H4-45571-00	**REC6H4-45570-00**	PIÑÓN MARCHA ATRÁS	GEAR REV.	PIGNONE MARCIA INDIETRO
64	663-45576-00		ARANDELA	WASHER	RONDELLA
65	91490-30030	**REC91490-30030**	PASADOR	PIN COTTER	SPINOTTO
66	90171-16011	**REC90171-16011**	TUERCA	NUT	DADO
67	92990-16200	**GLM21225**	ARANDELA	WASHER	RONDELLA
68	670-45997-02	**REC670-45997-00**	ESPACIADOR	SPACER	DISTANZIALE
69	663-45987-02	**REC663-45987-00**	ESPACIADOR	SPACER	DISTANZIALE
70	697-45384-00	**REC697-45384-00**	TUERCA	NUT	DADO
71	90214-48M03		ARANDELA	WASHER	RONDELLA
72	93101-22067	**REC93101-22067**	RETÉN ACEITE	OIL SEAL	PARAOLIO
73	93317-22204	**REC93317-22204**	COJINETE AGUJAS	CILINDRIC BEARING	CUSCINETTO
74	90282-04010	**REC90282-04010**	CHAVETA	KEY	CHIAVETTA
75	679-45331-00-94		COJINETE	BEARING	CUSCINETTO

E40X/MLHZ/XMH/XW - 40XMH - 40XE

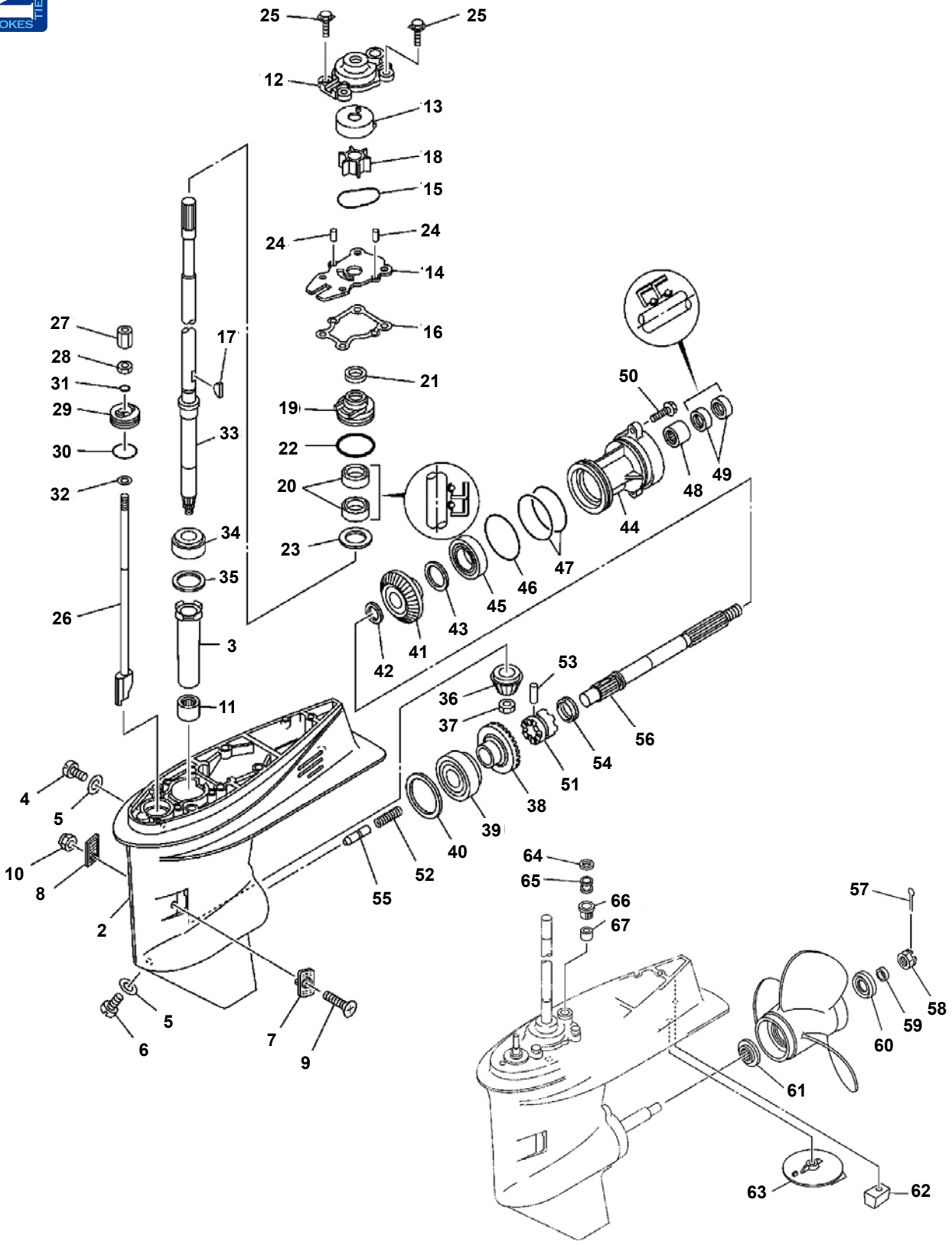

Ref.	R.O.
REC66T-W0078-00	66T-W0078-00

Kit reparación Bomba agua
Water Pump kit
Kit riparazione Pompa acqua

Ref.	R.O.
REC66T-W0001-20	66T-W0001-20

Kit juntas cola
Gearcase seal kit
Kit guarnizione piede

Nº	R.O. / OEM	Ref.	Descripción	Description	Descrizione
1	66T-45300-01-4D		COLA COMPLETA	LOWER UNIT ASSY	PIEDE COMPLETO
	66T-45300-11-4D		COLA COMPLETA	LOWER UNIT ASSY	PIEDE COMPLETO
2	66T-45311-01-4D		CARTER	CASING, LOWER	CARTER
3	6H4-45536-00		TUBO GUÍA	SLEEVE	TUBO
4	90340-08002	**REC90340-08014**	TAPÓN	PLUG	TAPPO
5	90430-08020	**REC90430-08020**	JUNTA	GASKET	GUARNIZIONE
6	688-45341-10	**REC688-45341-00**	TAPÓN	PLUG	TAPPO
7	63D-45214-00		TAPA	COVER	COPERCHIO
8	63D-45215-00		TAPA	COVER	COPERCHIO
9	90142-05M06		TORNILLO	SCREW	VITE
10	95380-05600		TUERCA	NUT	DADO
11	93315-32224	**REC93315-32224**	RODAMIENTO	BEARING	CUSCINETTO
12	66T-44311-00	**REC66T-44311-00**	CUERPO BOMBA AGUA	HOUSING, WATER PUMP	CORPO POMPA ACQUA
13	63D-44322-00	**REC63D-44322-00**	CASQUILLO	INSERT	BOCCOLA
14	66T-44323-00	**REC66T-44323-00**	PLATO	OUTTER PLATE	PIASTRA
15	93210-59MG7	**REC93210-59MG7**	ARILLO TÓRICO	O-RING	O-RING
16	63D-44316-00	**REC63D-44316-00**	JUNTA	GASKET, WATER PUMP	GUARNIZIONE
17	90280-03M03	**REC90280-03M03**	CHAVETA	KEY	CHIAVETTA
18	6H4-44352-02	**REC6H4-44352-02**	TURBINA	IMPELLER	GIRANTE
19	63D-44341-00	**REC63D-44341-00**	CUERPO	HOUSING	CORPO
20	93101-22M60	**REC93101-22M60**	RETÉN	OIL SEAL	PARAOLIO
21	66T-45344-01		TAPA	COVER	COPERCHIO
22	93210-48MG8	**REC93210-48MG8**	ARILLO TÓRICO	O-RING	O-RING
23	90201-27M00		ARANDELA	WASHER	RONDELLA
24	93604-08062		PASADOR	PIN	SPINOTTO
25	90119-08M15	**REC90119-08M15**	TORNILLO	BOLT	VITE
26	66T-44150-01		EJE	SHIFT CAM ASSY	ASSE
	66T-44150-11		EJE	SHIFT CAM ASSY	ASSE
27	61N-44146-00	**REC61N-44146-00**	CONECTOR	CONNECTOR	RACCORDO
28	95380-06700	**REC95380-06700**	TUERCA	NUT	DADO
29	66T-45321-00		PLATO	PLATE	PIASTRA
30	93210-337MG4	**REC93210-33MG4**	ARILLO TÓRICO	O-RING	O-RING
31	93210-06ME6	**REC93210-06ME6**	ARILLO TÓRICO	O-RING	O-RING
32	92990-06600		ARANDELA	WASHER	RONDELLA
33	66T-45501-01	**REC66T-45501-01**	EJE VERTICAL	DRIVE SHAFT	ASSE VERTICALE
	66T-45501-11	**REC66T-45501-10**	EJE VERTICAL	DRIVE SHAFT	ASSE VERTICALE
34	93332-00001	**REC93332-00001**	RODAMIENTO	BEARING	CUSCINETTO
35	663-45587-01		GRUESO	SHIM	SPESSORE
36	66T-45551-00	**REC66T-45551-00**	PIÑÓN	PINION (13T)	PIGNONE
37	90170-12138	**REC90170-12138**	TUERCA	NUT	DADO
38	66T-45560-01	**REC66T-45560-00**	PIÑÓN	GEAR 1 (26T)	PIGNONE
39	93332-00003	**REC93332-00003**	RODAMIENTO	BEARING	CUSCINETTO
40	663-45567-60		GRUESO	SHIM	SPESSORE
41	66T-45571-00	**REC66T-45570-00**	PIÑÓN	PINION 2 (26T)	PIGNONE
42	90201-22429	**REC90201-22429**	ARANDELA	WASHER	RONDELLA
43	63D-45577-00		GRUESO	SHIM	SPESSORE
44	63D-45361-02-4D	**REC63D-45361-02-4D**	DIÁVOLO	CAP	COP. CASSA INGRANAGGI
45	93306-001U1	**REC93306-001U1**	RODAMIENTO	BEARING	CUSCINETTO
46	93210-69MG6	**REC93210-69MG6**	ANILLO TÓRICO	O-RING	O-RING
47	93210-74MG5	**REC93210-74MG5**	ANILLO TÓRICO	O-RING	O-RING
48	93317-22204	**REC93317-22204**	RODAMIENTO	BEARING	CUSCINETTO
49	93101-22M00	**REC93101-22M00**	RETÉN	OIL SEAL	PARAOLIO
50	90105-08M61		TORNILLO	BOLT	VITE
51	66T-45631-00	**REC66T-45631-00**	SELECTOR	CLUTCH, DOG	SELETTORE
52	90501-15M01		MUELLE	SPRING	MOLLA
53	90250-06023	**REC90250-06023**	PASADOR	PIN	SPINOTTO
54	663-45633-00	**REC663-45633-00**	ANILLO	RING	O-RING
55	66T-45635-00	**REC66T-45635-00**	BULÓN	PLUNGER	BULLONE
56	66T-45611-00	**REC66T-45611-00**	EJE HÉLICE	SHAFT	ASSE ELICA
57	91490-30025	**REC91490-30025**	PASADOR ALETAS	PIN	SPINOTTO
58	90171-16011	**REC90171-16011**	TUERCA HÉLICE	NUT, CASTLE	DADO
59	90389-22M01	**REC90389-22M01**	CASQUILLO GRUESO	BUSH	BOCCOLA
60	66T-45997-00	**REC66T-45997-00**	ESPACIADOR	SPACER	DISTANZIALE
61	663-45987-02	**REC663-45987-00**	ESPACIADOR	SPACER	DISTANZIALE
62	67C-45251-00	**CM67C-45251-00**	ÁNODO	ANODE	ANODO
63	664-45371-01	**CM664-45371-01**	ÁNODO DERIVA	TAB-TRIM	ANODO
64	90430-12072	**REC90430-12072**	JUNTA	GASKET	GUARNIZIONE
65	663-44367-00		CASQUILLO	DAMPER	BOCCOLA
66	63D-44312-00	**GLM12874**	TAPA	COVER	COPERCHIO
67	663-44366-00	**REC663-44366-00**	CASQUILLO	DAMPER	BOCCOLA

E40GMH - 40GWH

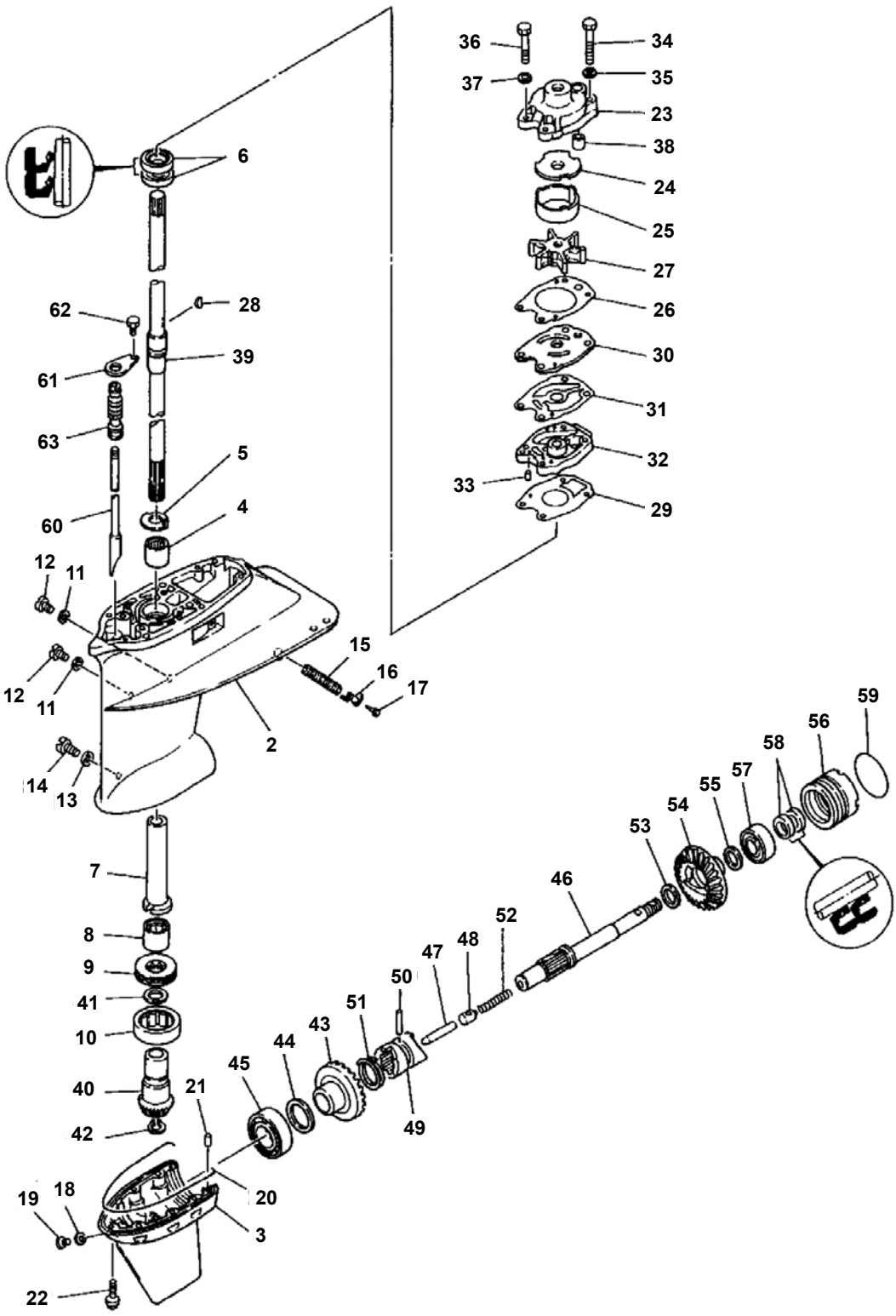

Ref.	R.O.
REC6F5-W0078-A0	6F5-W0078-A0

Kit reparación Bomba agua
Water Pump kit
Kit riparazione Pompa acqua

Ref.	R.O.
REC6F5-W0001-C0	6F5-W0001-C0

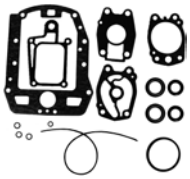

Kit juntas cola
Gearcase seal kit
Kit guarnizione piede

Nº	R.O. / OEM	Ref.	Descripción	Description	Descrizione
1	6F6-45300-02-4D		CONJUNTO UNIDAD INFERIOR	LOWER UNIT ASSY	PIEDE COMPLETO
	6F6-45300-12-4D		CONJUNTO UNIDAD INFERIOR	LOWER UNIT ASSY	PIEDE COMPLETO
	6F6-453000-22-4D		CONJUNTO UNIDAD INFERIOR	LOWER UNIT ASSY	PIEDE COMPLETO
2	6F5-45311-02-4D		FUNDA INFERIOR	CASING	COPERCHIO INFERIORE
3	6F5-45312-01-4D	**REC6F5-45312-00-4D**	FUNDA INFERIOR	CASING	COPERCHIO INFERIORE
4	93315-217U0	**REC93315-217U0**	COJINETE DE RODILLOS	BEARING	CUSCINETTO
5	676-45533-00	**REC676-45533-00**	ARANDELA DE EMPUJE AXIAL	WASHER	RONDELLA
6	93101-22M00	**REC93101-22M00**	SELLO ACEITE	OIL SEAL	PARAOLIO
7	676-45536-00		CAMISA EJE DE MANDO	SLEEVE	CAMICIA ASSE
8	93315-324U1	**REC93315-324U1**	COJINETE DE RODILLOS	BEARING	CUSCINETTO
9	93342-624U0	**REC93342-624U0**	COJINETE CON RODAMIENTOS	BEARING	CUSCINETTO
10	93390-000UO	**REC93390-000U0**	COJINETE DE RODILLOS	BEARING	CUSCINETTO
11	90430-08020	**REC90430-08020**	JUNTA	GASKET	GUARNIZIONE
12	90340-08002		TORNILLO, DRENAJE	BOLT DRAIN	VITE
13	90430-06M03		JUNTA	GASKET	GUARNIZIONE
14	90149-06M00		TORNILLO, DE REGLAJE	BOLT	VITE
15	676-45215-01		CUBIERTA ENTRADA AGUA	COVER FILTER	COPERCHIO ACQUA
16	6F5-45279-01		TAPA	CAP	TAPPO
17	97780-60525		TORNILLO CABEZA DE CONO ACH	BOLT	VITE
18	90430-08020	**REC90430-08020**	JUNTA	GASKET	GUARNIZIONE
19	688-45341-10	**REC688-45341-00**	TAPÓN, DREN	BOLT DRAIN	TAPPO
20	676-45314-00	**REC676-45314-00**	SELLO DE FUNDA INFERIOR	SEAL	BOCCOLA COPERCHIO INFERIORE
21	93604-09068		PASADOR DE CLAVIJA	PIN	SPINOTTO
22	90105-06M01	**REC90105-06M01**	TORNILLO	BOLT	VITE
23	676-44311-00		CAJA BOMBA AGUA	HOUSING WATER PUMP	ALLOGGIAMENTO POMPA ACQUA
24	676-44321-40		PLACA INTERIOR CARTUCHO	PLATE	PIASTRA
25	676-44322-40		CARTUCHO	INSERT CARTRIDGE	CARTUCCIA
26	676-44315-A1	**REC676-44315-00**	EMPAQUE	GASKET	GUARNIZIONE
27	6F5-44352-00	**REC6F5-44352-00**	IMPULSOR	IMPELLER	GIRANTE
28	90280-04M00	**REC90280-04M00**	CUNA WOODRUFF	KEY WOODRUFF	CHIAVE WOODRUFF
29	676-44316-A1	**REC676-44316-A1**	EMPAQUE	GASKET	GUARNIZIONE
30	676-44323-40	**REC676-44323-00-40**	PLACA EXTERIOR DEL CARTUCHO	PLATE	PIASTRA
31	676-44324-A1	**REC676-44324-A0**	EMPAQUE	GASKET	GUARNIZIONE
32	676-44341-94	**REC676-44341-00**	CAJA BOMBA DE AGUA	HOUSING WATER PUMP	ALLOGGIAMENTO POMPA ACQUA
33	93604-08062		PASADOR DE CLAVIJA	PIN, DOWEL	SPINOTTO
34	97095-08055	**REC97095-08055**	PERNO	BOLT	VITE
35	92995-08600		ARANDELA	WASHER	RONDELLA
36	97095-08045	**REC97095-08045**	PERNO	BOLT	VITE
37	92995-08600		ARANDELA	WASHER	RONDELLA
38	663-44366-00	**REC663-44366-00**	GOMA DEL SELLO DE AGUA	DAMPER WATER SEAL	BOCCOLA GOMMA ACQUA
39	676-45501-00		EJE DE MANDO COMPL.	DRIVE SHAFT	ASSE VERTICALE
	676-45501-10	**REC676-45501-10**	EJE DE MANDO COMPL.	DRIVE SHAFT	ASSE VERTICALE
	676-45501-20		EJE DE MANDO COMPL.	DRIVE SHAFT	ASSE VERTICALE
40	6F5-45551-00	**REC6F5-45551-00**	PIÑÓN	PINION (13T)	PIGNONE
41	676-45587-00-70	**REC676-45587-00-70**	GRUESO	SHIM (t:0.070mm)	SPESSORE
	676-45587-00-75	**REC676-45587-00-75**	GRUESO	SHIM (t:0.075mm)	SPESSORE
	676-45587-00-80	**REC676-45587-00-80**	GRUESO	SHIM (t:0.080mm)	SPESSORE
	676-45587-00-85		GRUESO	SHIM (t:0.085mm)	SPESSORE
42	93410-16007		SEGURO	CLIP	CLIP
43	6F5-45560-00	**REC6F5-45560-00**	ENGRANAJE COMPLE 1	GEAR	INGRANAGGIO
44	676-45567-00-07	**REC93332-000U0**	GRUESO	SHIM (t:0.7mm)	SPESSORE
	676-45567-00-08		GRUESO	SHIM (t:0.8mm)	SPESSORE
	676-45567-00-09		GRUESO	SHIM (t:0.9mm)	SPESSORE
	676-45567-00-10		GRUESO	SHIM (t:1.0mm)	SPESSORE
	676-45567-00-11		GRUESO	SHIM (t:1.1mm)	SPESSORE
	676-45567-00-12		GRUESO	SHIM (t:1.2mm)	SPESSORE
45	93332-000U0	**REC93332-000U0**	COJINETE	BEARING	CUSCINETTO
46	6F6-45611-00	**REC6F6-45611-00**	EJE PROPULSOR	SHAFT PROPELLER	ASSE GIRANTE
47	676-45635-00	**REC676-45635-00**	ÉMBOLO DE CAMBIO	PLUNGER SHIFT	CAMBIO PISTONE
48	663-45634-00	**REC663-45634-00**	DESLIZADOR, CAMBIO	SLIDE SHIFT	SCORREVOLE
49	663-45631-01	**REC663-45631-00**	EMBRAGUE DE GARRA	CLUTCH DOG	GIUNTO A DENTI FRONTALI
50	90250-06023	**REC90250-06023**	PASADOR CILÍNDRICO	PIN, STRAIGHT	SPINOTTO
51	663-45633-00	**REC663-45633-00**	ANILLO DE PASADOR	RING, CROSS PIN	O-RING
52	90501-16M01		RESORTE DE COMPRESIÓN	SPRING	MOLLA
53	90201-20MA8		ARANDELA PLANA	WASHER	RONDELLA
54	6F5-45570-00	**REC6F5-45570-00**	ENGRANAJE COMPL 2.	GEAR	INGRANAGGIO
55	676-45577-00-18		GRUESO	SHIM (t:1.8mm)	SPESSORE
	676-45577-00-19		GRUESO	SHIM (t:1.9mm)	SPESSORE
	676-45577-00-20		GRUESO	SHIM (t:2.0mm)	SPESSORE
	676-45577-00-21		GRUESO	SHIM (t:2.1mm)	SPESSORE
	676-45577-00-22		GRUESO	SHIM (t:2.2mm)	SPESSORE
	676-45577-00-23		GRUESO	SHIM (t:2.3mm)	SPESSORE
	676-45577-00-24		GRUESO	SHIM (t:2.4mm)	SPESSORE
	676-45577-00-25		GRUESO	SHIM (t:2.5mm)	SPESSORE
56	676-45361-01-94	**REC676-4536-01-94**	FUNDA INFERIOR	CAP LOWER CASING	COPERCHIO INFERIORE
57	93306-20401	**REC93306-204Y7**	COJINETE (B6204)	BEARING	CUSCINETTO
58	93101-20048	**REC93101-20048**	SELLO ACEITE	OIL SEAL	PARAOLIO
59	93210-57M00		ARO TÓRICO	O-RING	O-RING
60	676-44150-00		CONJUNTO EJE LEVA COMPL.	SHIFT	ALBERO COMPLETO
	676-44150-10		CONJUNTO EJE LEVA COMPL.	SHIFT	ALBERO COMPLETO
	676-44150-20		CONJUNTO EJE LEVA COMPL.	SHIFT	ALBERO COMPLETO
61	650-45321-00		PLACA	PLATE	PIASTRA
62	97095-06010		PERNO	BOLT	VITE
63	650-44147-00	**REC650-44147-00**	HULE DE VARILLA	BOOT, SHIFT ROD	AVVIO, BARRA DI SPOSTAMENTO

Ref.	R.O.
REC663-W0078-01	663-W0078-01

Kit reparación Bomba agua
Water Pump kit
Kit riparazione Pompa acqua

Ref.	R.O.
REC698-W0001-21	698-W0001-21

Kit juntas cola
Gearcase seal kit
Kit guarnizione piede

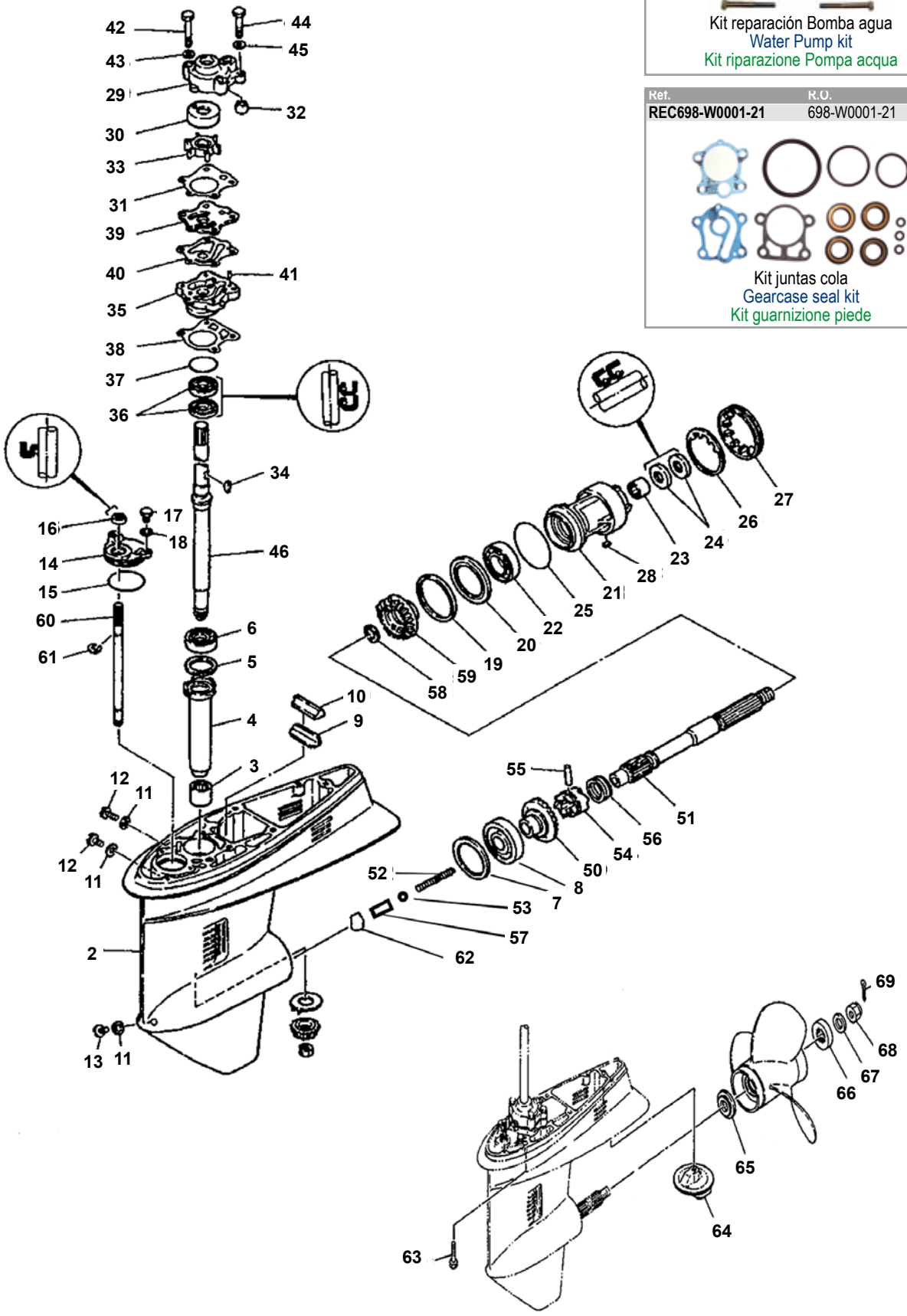

Nº	R.O. / OEM	Ref.	Descripción	Description	Descrizione
1	697-45300-01-4D		CONJUNTO UNIDAD	LOWER UNIT ASSY	PIEDE COMPLETO
2	697-45311-02-4D		FUNDA INTERIOR	CASING LOWER	COPERCHIO INFERIORE
3	93315-32224	**REC93315-32224**	COJINETE DE RODILLOS	BEARING	CUSCINETTO
4	663-45536-00		CAMISA EJE	SLEEVE, DRIVE SHAFT	CAMICIA ASSE
5	663-45587-01-10		GRUESO	SHIM	SPESSORE
6	93332-00001	**REC93332-00001**	COJINETE	BEARING	CUSCINETTO
7	663-45567-01-10		LAINA	SHIM (t:0.10mm)	SPESSORE
8	93332-00003	**REC93332-00003**	COJINETE	BEARING	CUSCINETTO
9	663-45376-00-94		SELLO GOMA	GUIDE, SEAL DAMPER	GUIDA, BOCCOLA
10	663-45375-00		GOMA DE SELLO	DAMPER, SEAL	BOCCOLA GOMMA
11	90430-08020	**REC90430-08020**	JUNTA	GASKET	GUARNIZIONE
12	90340-08002	**REC90340-08002**	TORNILLO	STRAIGHT SCREW	VITE
13	688-45341-10	**REC688-45341-00**	TAPÓN, DREN	PLUG, DRAIN	TAPPO
14	663-45321-00		PLACA	PLATE	PIASTRA
15	93210-49046	**REC93210-49046**	ANILLO O	O-RING	O-RING
16	93106-09014	**REC93106-09014**	RETÉN DE ACEITE	OIL SEAL	PARAOLIO
17	97095-06016		PERNO	BOLT	VITE
18	92995-06600		ARANDELA	WASHER	RONDELLA
19	663-45577-01-10		LAINA	SHIM	SPESSORE
20	663-45576-00		ARANDELA DE EMPUJE	WASHER, THURST	RONDELLA
21	663-45331-00-94	**REC663-45331-00-94**	CAJA DE COJINETE	HOUSING, BEARING	SEDE CUSCINETTO
22	93306-00702	**REC93306-00702**	COJINETE	BEARING	CUSCINETTO
23	93317-22204	**REC93317-22204**	COJINETE	BEARING	CUSCINETTO
24	93101-22067	**REC93101-22067**	SELLO ACEITE	OIL SEAL	PARAOLIO
25	93210-66M98	**REC93210-66M98**	ANILLO O	O- RING	O-RING
26	90214-48M03	**REC90214-48M03**	ARANDELA	WASHER	RONDELLA
27	697-45384-00	**REC697-45384-00**	TUERCA	NUT	DADO
28	90282-04010	**REC90282-04010**	CHAVETA	KEY, STRAIGHT	CHIAVETTA
29	663-44311-02	**REC663-44311-02**	CAJA BOMBA	HOUSING, WATER PUMP	CORPO POMPA
30	663-44322-00	**REC663-44322-00**	CARTUCHO	INSERT CARTRIDGE	CARTUCCIA
31	663-44315-A0	**REC663-44315-00**	EMAPAQUE	GASKET, WATER PUMP	GUARNIZIONE
32	663-44366-00	**REC663-44366-00**	GOMA SELLO	DAMPER, WATER SEAL	BOCCOLA GOMMA
33	697-44352-00	**REC6H3-44352-00**	IMPULSOR	IMPELLER	GIRANTE
34	90280-03M03	**REC90280-03M03**	CUNA WOODRUFF	KEY, WOODRUFF	CHIAVE WOODRUFF
35	663-44341-00	**REC663-44311-02**	CAJA BOMBA	HOUSING, WATER PUMP	CORPO POMPA
36	93101-23070	**REC93101-23070**	SELLO ACEITE	OIL SEAL	PARAOLIO
37	93210-41042	**REC93210-41042**	ANILLO O	O-RING	O-RING
38	663-44316-A0	**REC663-44316-A0**	EMPAQUE	GASKET, WATER PUMP	GUARNIZIONE
39	663-44323-00	**REC663-44323-00**	PLACA EXTERIOR	OUTTER PLATE	PIASTRA EXT.
	670-44323-00	**REC670-44323-00**	PLACA EXTERIOR	OUTTER PLATE	PIASTRA EXT.
40	663-44324-A0	**REC663-44324-00**	EMPAQUE	GASKET, CARTRIDGE	GUARNIZIONE
41	93604-08062		PASADOR DE CLAVIJA	PIN, DOWEL	SPINOTTO
42	97095-08055	**REC97095-08055**	PERNO	BOLT	VITE
43	92995-08600	**GLM21720**	ARANDELA	WASHER	RONDELLA
44	97095-08045	**REC97095-08045**	PERNO	BOLT	VITE
45	92995-08600	**GLM21720**	ARANDELA	WASHER	RONDELLA
46	663-45510-01	**REC663-45510-01**	EJE DE MANDO	DRIVE SHAFT ASSY	ASSE VERTICALE
47	663-45552-00	**REC663-45552-00**	COJINETE PLANO	BEARING, PLAIN	CUSCINETTO PIATO
48	697-45551-00	**REC697-45551-00**	PIÑÓN	PINION	PIGNONE
49	90170-12138	**REC90170-12138**	TUERCA	NUT	DADO
50	697-45560-00	**REC697-45560-00**	ENGRANAJE COMPLETO	GEAR	INGRANAGGIO
51	697-45611-00	**REC697-45611-00**	EJE PROPULSOR	SHAFT PROPELLER	ASSE
52	90501-16233	**REC90501-16233**	RESORTE DE COMPRESIÓN	SPRING	MOLLA
53	663-45634-00	**REC663-45634-00**	DESLIZADOR CAMBIO	SLIDE, SHIFT	SCORREVOLE
54	663-45631-01	**REC663-45631-00**	EMBRAGUE DE GARRA	CLUTCH, DOG	GIUNTO A DENTI FRONTALE
55	90250-06023	**REC90250-06023**	PASADOR CILÍNDRICO	PIN, STRAIGHT	SPINOTTO
56	663-45633-00	**REC663-45633-00**	ANILLO DE PASADOR	RING, CROSS PIN	O-RING
57	688-45635-00	**REC688-45635-00**	PLUNGER, SHIFT	ÉMBOLO DE CAMBIO	CAMBIO PISTONE
58	90201-22429	**REC90201-22429**	ARANDELA PLANA	WASHER, PLATE	RONDELLA
59	697-45571-00	**REC697-45570-00**	ENGRANAJE	GEAR	INGRANAGGIO
60	663-44144-01	**REC663-44144-01**	VARILLA DE CAMBIO	ROD, SHIFT	ASTICELLA
61	99001-08600		PRESILLA REDONDA	CIRCLIP	CIRCLIP
62	663-44151-00	**REC663-44151-00**	LEVA DE CAMBIO	CAM SHIFT	ALBERO
63	97075-10040	**REC97075-10040**	PERNO	BOLT	PERNO
64	679-45371-00	**TEN01101**	QUILLA ESTABILIZADOR	TAB-TRIM	TAB-TRIM
65	663-45987-02	**REC663-45987-00**	ESPACIADOR	SPACER	DISTANZIALE
66	670-45997-02	**REC670-45997-00**	ESPACIADOR	SPACER	DISTANZIALE
67	92990-16200	**GLM21225**	ARANDELA PLANA	WASHER, PLAIN	RONDELLA
68	90171-16011	**REC90171-16011**	TUERCA ENTALLADA	NUT, CASTLE	DADO
69	91490-40025	**REC91490-40025**	CHAVETA	PIN, COTTER	CHIAVETTA

Ref.	R.O.
REC692-W0078-02	692-W0078-02

Kit reparación Bomba agua
Water Pump kit
Kit riparazione Pompa acqua

Ref.	R.O.
REC688-W0001-22	688-W0001-22

Kit juntas cola
Gearcase seal kit
Kit guarnizione piede

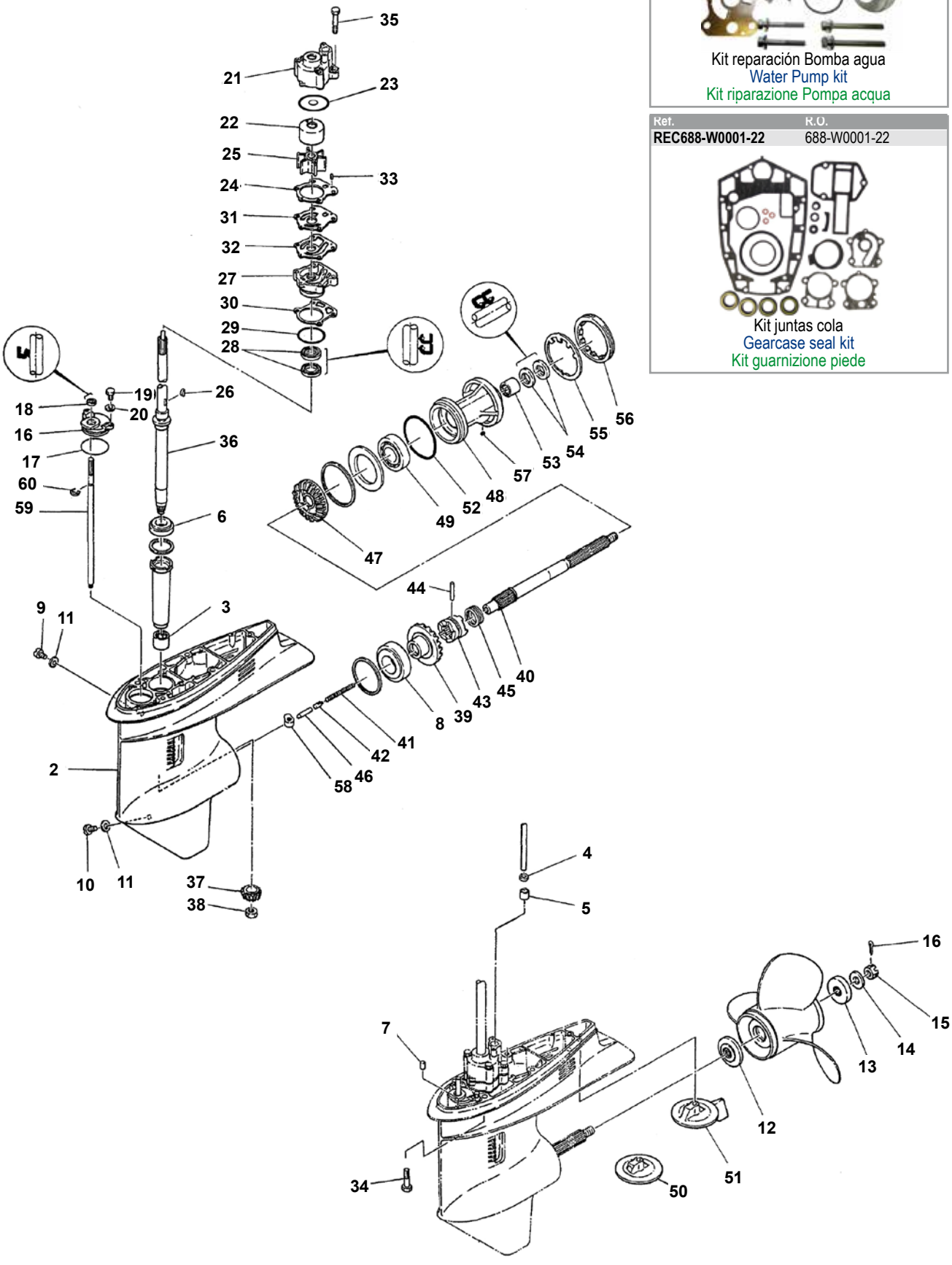

Nº	R.O. / OEM	Ref.	Descripción	Description	Descrizione
1	692-45300-14-4D		COLA COMPLETA	LOWER UNIT ASSY	PIEDE COMPLETO
	692-45300-24-4D		COLA COMPLETA	LOWER UNIT ASSY	PIEDE COMPLETO
2	688-45311-06-4D		CARTER	CASING, LOWER	CARTER
3	93315-325V1	**REC93315-325V1**	RODAMIENTO	BEARING	CUSCINETTO
4	90430-12072	**REC90430-12072**	JUNTA	GASKET	GUARNIZIONE
5	663-44366-00	**REC663-44366-00**	CASQUILLO GOMA	DAMPER, WATER SEAL	BOCCOLA GOMMA
6	93332-000U3	**REC93332-000U3**	RODAMIENTO	BEARING	CUSCINETTO
7	93606-12019	**PAF15-00000006**	PASADOR	PIN, DOWEL	SPINOTTO
8	93332-000W7	**REC93332-000W7**	RODAMIENTO	BEARING	CUSCINETTO
9	90340-08002	**REC 90340-08002**	TAPÓN	PLUG STRAIGHT SCREW	TAPPO
10	688-45341-10	**REC688-45341-00**	TAPÓN	PLUG DRAIN	TAPPO
11	90430-08020	**REC90430-08020**	JUNTA	GASKET	GUARNIZIONE
12	688-45987-01	**REC688-45987-00**	SEPARADOR	SPACER	DISTANZIALE
13	67F-45997-00	**GLM22178**	SEPARADOR	SPACER	DISTANZIALE
14	90389-25M00	**GLM21223**	CASQUILLO	BUSH	BOCCOLA
15	90171-16011	**REC90171-16011**	TUERCA	NUT, CASTLE	DADO
16	91490-40025	**REC91490-40025**	PASADOR ALETAS	PIN, COTTER	SPINOTTO
17	93210-49046	**REC93210-49046**	ARO TÓRICO	O-RING	O-RING
18	93106-09014	**REC93106-09014**	RETÉN	OIL SEAL	PARAOLIO
19	97095-06016		TORNILLO	BOLT	VITE
20	92995-06600		ARANDELA	WASHER	RONDELLA
21	688-44311-01	**REC688-44311-01**	CUERPO BOMBA AGUA	HOUSING, WATER PUMP	CORPO POMPA ACQUA
22	688-44322-00	**REC688-44322-00**	CASQUILLO INOX.	INSERT, CARTRIDGE	BOCCOLA INOX.
	688-44322-41		CASQUILLO INOX.	INSERT, CARTRIDGE	BOCCOLA INOX.
23	688-44321-41		ARANDELA	INNER PLATE, CARTRIDGE	RONDELLA
24	688-44315-A0	**REC688-44315-00**	JUNTA	GASKET, WATER PUMP	GUARNIZIONE
25	688-44352-03	**REC688-44352-03**	TURBINA	IMPELLER	GIRANTE
26	90280-04M04	**REC90280-04M04**	CHAVETA	KEY, WOODRUFF	CHIAVETTA
27	688-44341-01-94	**REC688-44341-01**	TAPA INF. BOMBA AGUA	HOUSING, WATER PUMP	CORPO INF. POMPA ACQUA
28	93101-25M03	**REC93101-25M03**	RETÉN	OIL SEAL	PARAOLIO
29	93210-46044	**REC93210-46044**	ARO TÓRICO	O-RING	O-RING
30	688-44316-A0	**REC688-44316-00**	JUNTA	GASKET WATER PUMP	GUARNIZIONE
	688-44323-00	**REC688-44323-00**	PLATO	OUTTER PLATE, CARTRIDGE	PIASTRA
31	688-44323-40		PLATO	OUTTER PLATE, CARTRIDGE	PIASTRA
32	688-44324-A0	**REC688-44324-00**	JUNTA	GASKET, CARTRIDGE	GUARNIZIONE
33	93604-10M03	**PAF25-04000007**	CENTRADOR	PIN, DOWEL	SPINOTTO
34	97075-10040	**REC97075-10040**	TORNILLO	BOLT WITH WASHER	VITE
35	90119-08M13	**REC90119-08M13**	TORNILLO	BOLT WITH WASHER	VITE
	688-45501-11	**REC688-45501-11**	EJE VERTICAL	DRIVE SHAFT COMP.	ASSE VERTICALE
36	688-45501-22		EJE VERTICAL	DRIVE SHAFT COMP.	ASSE VERTICALE
37	688-45551-01	**REC688-45551-00**	ENGRANAJE	PINION	PIGNONE
38	90170-16M01	**REC90170-16M01**	TUERCA	NUT	DADO
39	688-45560-00	**REC688-45560-00**	ENGRANAJE	PINION	PIGNONE
40	688-45611-00	**REC688-45611-00**	EJE HÉLICE	SHAFT, PROPELLER	ASSE ELICA
41	90501-16233	**REC90501-16233**	MUELLE	SPRING, COMPRESSION	MOLLA
42	688-45634-00	**REC688-45634-00**	EMPUJADOR	SLIDE, SHIFT	SCORREVOLE
43	688-45631-01	**REC688-45631-00**	DESPLAZABLE	CLUTCH, DOG	GIUNTO A DENTI FRONTALE
44	90250-07M02	**REC90250-07M02**	PASADOR	PIN, STRAIGHT	SPINOTTO
45	688-45633-00	**REC688-45633-00**	ARO METÁLICO	RING, CROSS PIN	O-RING
46	688-45635-00	**REC688-45635-00**	BULÓN	PLUNGER, SHIFT	BULLONE
47	688-45571-01	**REC688-45570-00**	ENGRANAJE	PINION	PIGNONE
48	688-45331-00-94	**REC688-45331-00-94**	DIÁBOLO	HOUSING, BEARING	COP. CASSA INGRANAGGI
49	93306-207U0	**REC93306-207U0**	RODAMIENTO	BEARING	CUSCINETTO
50	6E5-45371-10	**CM6E5-45311-10**	ÁNODO TIMONCETE HÉLICE INOX.	TAB-TRIM	ANODO
51	688-45371-02	**CM688-45371-02**	ÁNODO TIMONCETE STD.	TAB-TRIM	ANODO
52	93210-85M97	**REC93210-85M97**	ARO TÓRICO	O-RING	O-RING
53	93317-325U0	**REC93317-325U0**	RODAMIENTO	BEARING	CUSCINETTO
54	93101-25M03	**REC93101-25M03**	RETÉN	OIL SEAL	PARAOLIO
55	688-45383-02	**REC688-45383-01**	ARANDELA CIERRE	WASHER, CLAW	RONDELLA CHIUSURA
56	688-45384-00	**REC688-45384-00**	TUERCA	NUT	DADO
57	90282-04010	**REC90282-04010**	CHAVETA	KEY, STRAIGHT	CHIAVETTA
58	663-44151-00	**REC663-44151-00**	LEVA	CAM, SHIFT	LEVA
59	663-44144-01	**REC663-44144-01**	EJE SELECTOR	ROD, SHIFT	ASSE SELETTORE
60	99001-08600	**REC99001-08600**	CERCLIP	CIRCLIP	CIRCLIP

Ref.	R.O.
GLM12282	692-W0078-(00/01)-00

Kit reparación Bomba agua
Water Pump kit
Kit riparazione Pompa acqua

Ref.	R.O.
REC-688-W0001-22	688-W0001-20-00

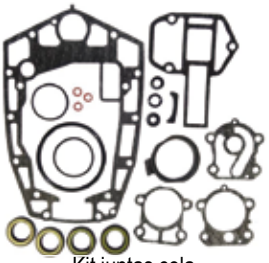

Kit juntas cola
Gearcase seal kit
Kit guarnizione piede

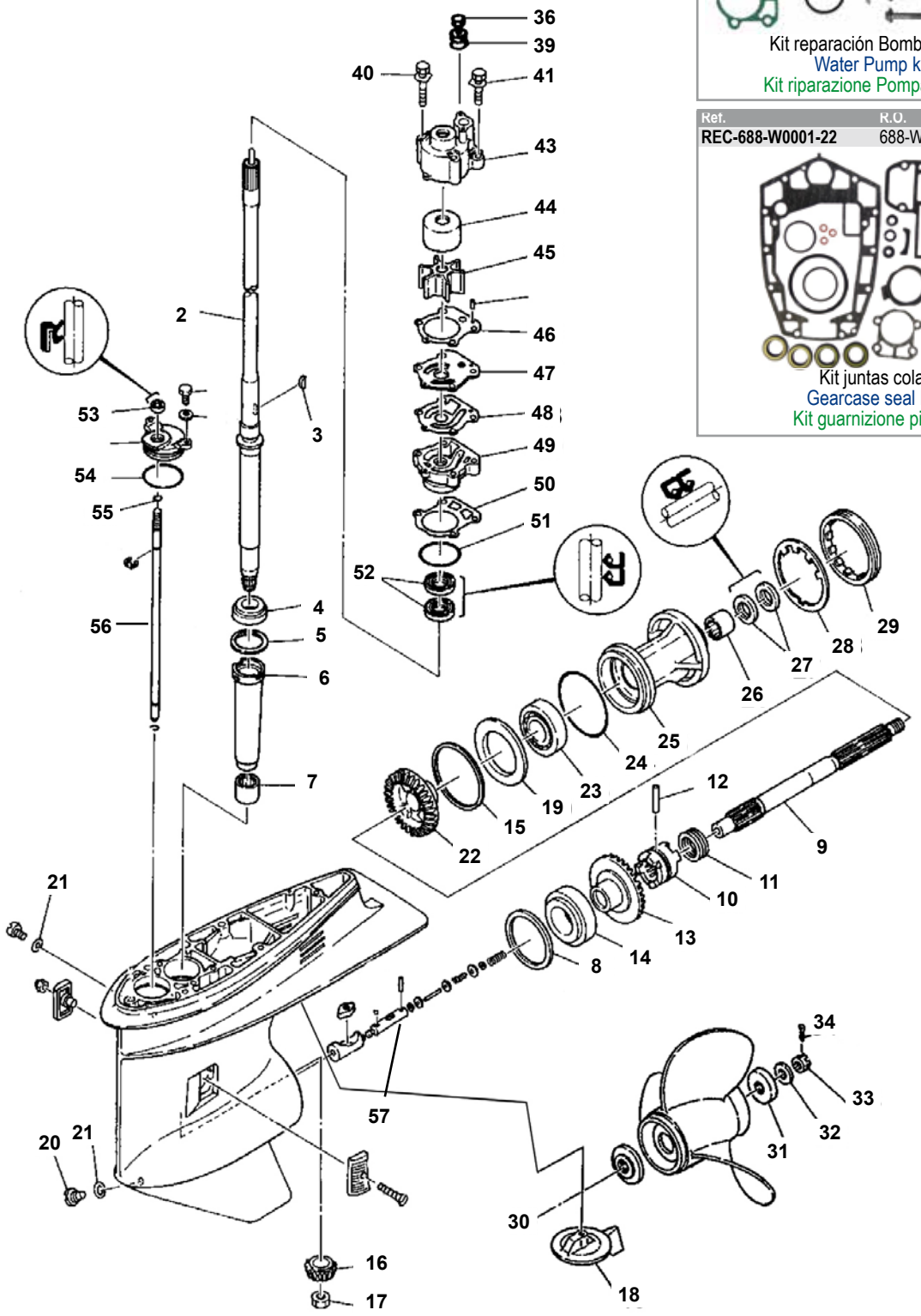

Nº	R.O. / OEM	Ref.	Descripción	Description	Descrizione
1	6H1-45301-04-EK		CARCASA	GEARCASE	CARCASA
2	6H1-45501-11-00		EJE	SHAFT	ASSE
3	90280-04M04-00	**REC90280-04M04**	CHAVETA	KEY	CHIAVETTA
4	93332-000U3-00	**REC93332-000U3**	RODAMIENTO	BEARING	CUSCINETTO
6	688-45536-01-00		CAMISA	SLEEVE	CAMICIA
7	93315-325V1-00	**REC93315-325V1**	RODAMIENTO	BEARING	CUSCINETTO
9	6H1-45611-01-00	**REC6H1-45611-00**	EJE HÉLICE	PROPELLER SHAFT	ASSE ELICA
10	6H1-45631-01-00	**REC6H1-45631-01**	SELECTOR	CLUTCH	SELETTORE
11	688-45633-00-00	**REC688-45633-00**	MUELLE	SPRING	MOLLA
12	90250-07M02-00	**REC90250-07M02**	PASADOR	PIN	SPINOTTO
13	688-45560-00-00	**REC688-45560-00**	ENGRANAJE	GEAR	INGRANAGGIO
14	93332-000W7-00	**REC93332-000W7**	RODAMIENTO	BEARING	CUSCINETTO
16	688-45551-01-00	**REC688-45551-00**	PIÑÓN	GEAR	PIGNONE
17	90170-16M01-00	**REC90170-16M01**	TUERCA	NUT	DADO
18	688-45371-02-00	**CM688-45371-02**	ÁNODO	ANODE	ANODO
19	688-45576-00-00	**REC688-45576-00**	ARANDELA	WASHER	RONDELLA
20	688-45341-00-00	**REC688-45341-00**	TAPÓN	PLUG	TAPPO
21	90430-08020-00	**REC90430-08020**	JUNTA	GASKET	GUARNIZIONE
22	6H1-45571-00-00		PIÑÓN MARCHA ATRÁS	GEAR R.V.	PIGNONE MARCIA IND.
23	93306-207U0-00	**REC93306-207U0**	RODAMIENTO	BEARING	CUSCINETTO
24	93210-85M97-00	**REC93210-85M97**	ARO TÓRICO	O-RING	O-RING
25	688-45331-00-94	**REC688-45331-00-94**	RODAMIENTO	BEARING	CUSCINETTO
26	93317-325U0-00	**REC93317-325U0**	RODAMIENTO	BEARING	CUSCINETTO
27	93101-25M03-00	**REC93101-25M03**	RETÉN	OIL SEAL	PARAOLIO
28	688-45383-02-00	**REC688-45383-01**	ARANDELA	WASHER	RONDELLA
29	688-45384-00-00	**REC688-45384-00**	TUERCA	NUT	DADO
30	688-45987-01-00	**REC688-45987-00**	ESPACIADOR	SPACER	DISTANZIALE
31	688-45997-01-00	**REC688-45997-00**	ESPACIADOR	SPACER	DISTANZIALE
32	90201-17M00-00	**REC90201-17M00**	ARANDELA	WASHER	RONDELLA
33	90171-16011-00	**REC90171-16011**	TUERCA	NUT	DADO
34	91490-40030-00	**REC91490-40030**	PASADOR	PIN	SPINOTTO
35	90202-12060-00		ARANDELA	WASHER	RONDELLA
36	90430-12072-00	**REC90430-12072**	JUNTA	GASKET	GUARNIZIONE
37	663-44367-00-00		CASQUILLO	DAMPER	BOCCOLA
38	90480-19M06-00		RETÉN	SEAL	PARAOLIO
39	663-44366-00	**REC663-44366-00**	RETÉN	SEAL	PARAOLIO
40	97395-08070-00	**REC97395-08070**	TORNILLO	BOLT	VITE
41	97395-08050-00		TORNILLO	BOLT	VITE
42	90209-08M02-00		ARANDELA	WASHER	RONDELLA
43	688-44311-01-00	**REC688-44311-01**	CUERPO BOMBA AGUA	HOUSING	CORPO POMA ACQUA
44	688-44322-00-00	**REC688-44322-00**	ACOPLAMIENTO INOX.	INSERT	BOCCOLA INOX.
45	688-44352-03-00	**REC688-44352-03-00**	TURBINA	IMPELLER	GIRANTE
46	688-44315-A0-00	**REC688-44315-00**	JUNTA	GASKET	GUARNIZIONE
47	688-44323-00-00	**REC688-44323-00-00**	PLATO	PLATE	PIASTRA
48	688-44324-A0-00	**REC688-44324-00**	JUNTA	GASKET	GUARNIZIONE
49	688-44341-01-94	**REC688-44341-01**	BASE, BOMBA AGUA	HOUSING WATER PUMP	BASE POMPA ACQUA
50	688-44316-A0-00	**REC688-44316-00**	JUNTA, BASE	GASKET	GUARNIZIONE
51	93210-46044-00	**REC93210-46044**	ANILLO, BASE	O-RING	O-RING
52	93101-25M03-00	**REC93101-25M03**	RETÉN	OIL SEAL	PARAOLIO
53	93106-09014-00	**REC93106-09014**	RETÉN	OIL SEAL	PARAOLIO
54	93210-49046-00	**REC93210-49046**	ANILLO	O-RING	O-RING
55	93210-07540-00		ANILLO	O-RING	O-RING
56	6H1-44144-00	**REC6H1-44144-00**	VARILLA CAMBIO	SHIFT ROD	ASSE SELETTORE
57	6H1-45634-02	**REC6H1-45634-02**	DESPLAZABLE	SLIDE, SHIFT	SCORREVOLE

Ref.	R.O.
GLM12282	692-W0078-(00/01)-00

Kit reparación Bomba agua
Water Pump kit
Kit riparazione Pompa acqua

Ref.	R.O.
REC688-W0001-22	688-W0001-20-00

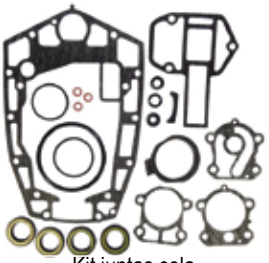

Kit juntas cola
Gearcase seal kit
Kit guarnizione piede

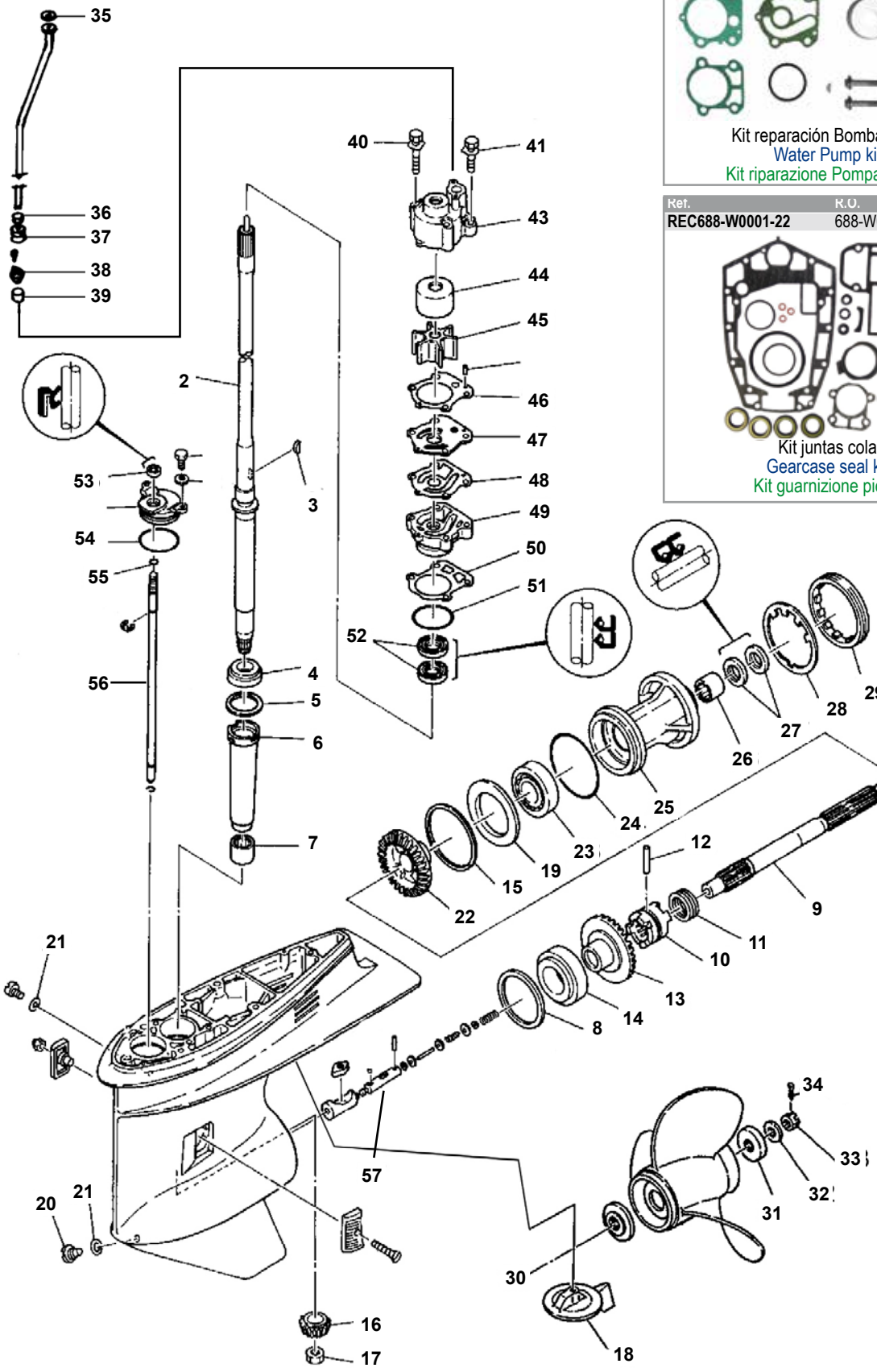

Nº	R.O. / OEM	Ref.	Descripción	Description	Descrizione
1	6H1-45301-04-EK		CARCASA	GEAR CASE	CARCASSA
2	6H1-45501-11-00		EJE	SHAFT	ASSE
3	90280-04M04	**REC90280-04M04**	CHAVETA	KEY	CHIAVETTA
4	93332-000U3	**REC93332-000U3**	COJINETE	BEARING	CUSCINETTO
6	688-45536-01		CAMISA	SLEEVE	CAMICIA
7	93315-325V1	**REC93315-325V1**	COJINETE	BEARING	CUSCINETTO
9	6H1-45611-01	**REC6H1-45611-00**	EJE HÉLICE	PROPELLER SAHFT	ASSE ELICA
10	6H1-45631-01	**REC6H1-45631-01**	SELECTOR	CLUTCH	SELETTORE
11	688-45633-00	**REC688-45633-00**	MUELLES	SPRING	MOLLA
12	90250-07M02	**REC93250-07M02**	PASADOR	PIN	SPINOTTO
13	688-45560-00	**REC688-45560-00**	PIÑÓN	GEAR	PIGNONE
14	93332-000W7	**REC93332-000W7**	COJINETE	BEARING	CUSCINETTO
16	688-45551-01	**REC688-45551-00**	PIÑÓN	GEAR	PIGNONE
17	90170-16M01	**REC90170-16M01**	TUERCA	NUT	DADO
18	688-45371-02	**CM688-45371-02**	ÁNODO	ANODE	ANODO
21	90430-08020	**REC90430-08020**	JUNTA	GASKET	GUARNIZIONE
22	6H1-45571-00		PIÑÓN M.A.	GEAR R.V.	PIGNONE MARCIA IND.
23	93306-207U0	**REC93306-207U0**	COJINETE	BEARING	CUSCINETTO
24	93210-85M97	**REC93210-85M97**	ARO	O-RING	O-RING
25	688-45331-00-94	**REC688-45331-00-94**	COJINETE	BEARING	CUSCINETTO
26	93317-325U0	**REC93317-325U0**	COJINETE AGUJA	BEARING	CUSCINETTO
27	93101-25M03	**REC93101-25M03**	RETÉN ACEITE	OIL SEAL	PARAOLIO
28	688-45383-02	**REC688-45383-01**	ARANDELA	WASHER	RONDELLA
29	688-45384-00	**REC688-45384-00**	TUERCA TAPA	NUT	DADO
30	688-45987-01	**REC688-45987-00**	ESPACIADOR	SPACER	DESPAZIALE
31	688-45997-01	**REC688-45997-00**	ESPACIADOR	SPACER	DESPAZIALE
32	90201-17M00	**REC90201-17M00**	ARANDELA	WASHER	RONDELLA
33	90171-16011	**REC90171-16011**	TUERCA	NUT	DADO
34	91490-40030	**REC91490-40030**	PASADOR	PIN	SPINOTTO
35	90202-12060		ARANDELA	WASHER	RONDELLA
36	90430-12072	**REC90430-12072**	JUNTA	GASKET	GUARNIZIONE
37	663-44367-00		FLECTOR	DAMPER	AMMORTIZZATORE
38	90480-19M06		GRUESO	SEAL	SPESSORE
39	663-44366-00	**REC663-44366-00**	FLECTOR RETÉN AGUA	SEAL	TENUTA
40	97395-08070	**REC97395-08070**	TORNILLO	BOLT	VITE
41	97395-08050		TORNILLO	BOLT	VITE
42	90209-08M02		ARANDELA	WASHER	RONDELLA
43	688-44311-01	**REC688-44311-01**	CUERPO BOMBA AGUA	HOUSTING	CORPO POMPA ACQUA
44	688-44322-00	**REC688-44322-00**	ACOPLE INOX.	INSERT	ACCOPPIAMENTO INOX.
45	688-44352-03	**REC688-44352-03**	IMPULSOR	IMPELLER	GIRANTE
46	688-44315-A0	**REC688-44315-00**	JUNTA	GASKET	GUARNIZIONE
47	688-44323-00	**REC688-44323-00**	TAPA BOMBA	PLATE	PIASTRA
48	688-44324-A0	**REC688-44324-A0**	JUNTA	GASKET	GUARNIZIONE
49	688-44341-01-94	**REC688-44341-01**	BASE, BOMBA AGUA	HOUSING	BASE POMPA ACQUA
50	688-44316-A0	**REC688-44316-00**	JUNTA, BASE	GASKET	GUARNIZIONE
51	93210-46044	**REC93210-46044**	ARO, BASE	O-RING	O-RING
52	93101-25M03	**REC93101-25M03**	RETÉN ACEITE	OIL SEAL	PARAOLIO
53	93106-09014	**REC93106-09014**	RETÉN ACEITE	OIL SEAL	PARAOLIO
54	93210-49046	**REC93210-49046**	ARO	O-RING	O-RING
55	93210-07540		ARO	O-RING	O-RING
56	6H1-44144-00	**REC6H1-44144-00**	VARILLA CAMBIO	SHIFT ROD	ASSE SELETTORE
57	6H1-45634-02	**REC6H1-45634-02**	DESPLAZABLE	SLIDE SHIFT	SCORREVOLE

V4

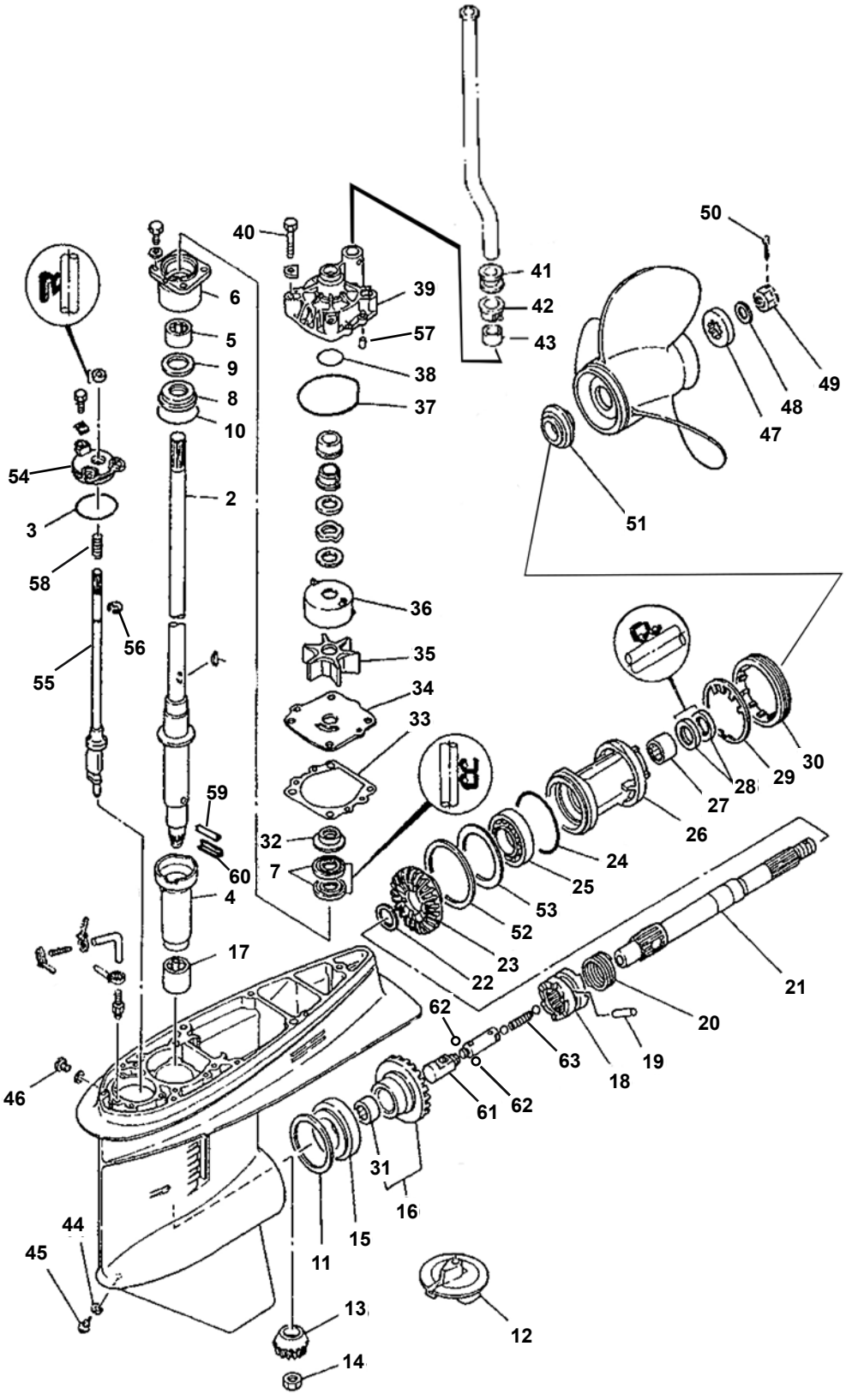

Ref.	R.O.
REC6N6-W0078-02	6E5-W0078-01-00

Kit reparación Bomba agua
Water Pump kit
Kit riparazione Pompa acqua

Ref.	R.O.
REC6E5-W0001-F1	6E5-W0001-51-00

Kit juntas cola
Gearcase seal kit
Kit guarnizione piede

Nº	R.O. / OEM	Ref.	Descripción	Description	Descrizione
1	6E5-45301-03EK		CARCASA	GEAR CASE	CARCASSA
2	6E5-45501-01	**REC6E5-45501-01**	EJE (LARGO)	SHAFT	ASSE LUNGO
	6E5-45501-21	**REC6E5-45501-21**	EJE (X-LARGO)	SHAFT	ASSE X-LUNGO
3	93210-58677	**REC93210-58677**	ARO	O-RING	O-RING
4	6E5-45536-00	**REC6E5-45536-00**	CAMISA	SLEEVE	CAMICIA, ASSE
5	93315-430V5	**REC93315-430V5**	COJINETE	BEARING	CUSCINETTO
6	6E5-45331-0094	**REC6E5-45331-00-94**	COJINETE	BEARING	CUSCINETTO
7	93101-28M16	**REC93101-28M16**	RETÉN EJE	OIL SEAL	PARAOLIO
9	93341-930U0	**REC93341-930U0**	COJINETE	BEARING	CUSCINETTO
10	93210-54534	**REC93210-54534**	ARO	O-RING	O-RING
12	6E5-45371-01	**CM6E5-45371-01**	ÁNODO	ANODE	ANODO
13	6E5-45551-02	**REC6E5-45551-00**	PIÑÓN	GEAR	PIGNONE
14	90170-16M01	**REC90170-16M01**	TUERCA	NUT	DADO
15	93332-000U7	**REC93332-000U7**	COJINETE	BEARING	CUSCINETTO
16	6E5-45560-01	**REC6E5-45560-00**	PIÑÓN	GEAR	PIGNONE
17	93315-628U9	**REC93315-628U9**	COJINETE	BEARING	CUSCINETTO
18	6R5-45631-01	**REC6E5-45631-00**	SELECTOR	CLUTCH	SELETTORE
19	90250-08M07	**REC90250-08M07**	PASADOR	PIN	SPINOTTO
20	6E5-45633-01	**REC6E5-45633-01**	RETENEDOR	SPRING	MOLLA
21	6E5-45611-01	**REC6E5-45611-00**	EJE HÉLICE	PROPELLER SHAFT	ASSE ELICA
22	90201-30M92	**REC90201-30M92**	ARANDELA	WASHER	RONDELLA
23	6E5-45571-04	**REC6E5-45570-00**	PIÑÓN M.A	GEAR R.V.	PIGNONE MARCIA IND.
24	93210-86M39	**REC93210-86M39**	ARO	O-RING	O-RING
25	93306-208U0	**REC93306-208U0**	COJINETE, MARCHA ATRÁS	BEARING	CUSCINETTO
26	6E5-45332-00-94	**REC6E5-45331-00-94**	DIÁBOLO	GEAR HOUSING	COP. CASSA INGRANAGGI
27	93315-430U8	**REC93315-430U8**	COJINETE AGUJAS	BEARING	CUSCINETTO
28	93101-30M17	**REC93101-30M17**	RETÉN, EJE HÉLICES	OIL SEAL	PARAOLIO
29	688-45383-02	**REC688-45383-01**	ARANDELA	WASHER	RONDELLA
30	688-45384-00	**REC688-45384-00**	TUERCA	NUT	DADO
31	93315-425U7	**REC93315-425U7**	COJINETE	BEARING	CUSCINETTO
32	6E5-45344-00	**REC6E5-45344-00**	TAPA RETÉN ACEITE	COVER	COPERCHIO
33	6E5-44315-A0	**REC6E5-44315-A0**	JUNTA, BOMBA AGUA	GASKET	GUARNIZIONE
34	6E5-44323-00	**REC6E5-44323-00-40**	TAPA BOMBA AGUA	COVER	COPERCHIO POMPA ACQUA
35	6E5-44352-00	**REC6E5-44352-01**	IMPULSOR	IMPELLER	GIRANTE
36	6E5-44322-00	**REC6E5-44322-00**	ACOPLE INOX.	INSERT	ACCOPPIAMENTO INOX.
37	93210-86M38	**REC93210-86M38**	ARO, BOMBA AGUA	O-RING	O-RING
38	93210-37M67	**REC93210-37M67**	ARO, BOMBA AGUA	O-RING	O-RING
39	6E5-44311-00	**REC 6E5-44311-00**	CUERPO BOMBA AGUA	HOUSING	CORPO POMPA ACQUA
40	97080-08045	**REC97080-08045**	TORNILLO	BOLT	VITE
41	6E5-44366-00	**GLM38301**	FLECTOR RETÉN AGUA	DAMPER	AMMORTIZZATORE
42	6E5-44312-00	**REC6E5-44312-00**	TAPA BOMBA AGUA	COVER	COPERCHIO POMPA ACQUA
43	6E5-44365-00	**GLM38300**	FLECTOR RETÉN AGUA	DAMPER	CURVA
44	90430-08020	**REC90430-08020**	JUNTA	GASKET	GUARNIZIONE
45	688-45341-00	**REC688-45341-00**	TAPÓN DRENAJE	PLUG	TAPPO
46	90340-08M04	**REC90340-08014**	TAPÓN DRENAJE	PLUG	TAPPO
47	688-45997-01	**REC688-45997-00**	ESPACIADOR	SPACER	DISTANZIALE
48	92990-18200	**GLM21221**	ARANDELA	WASHER	RONDELLA
49	90171-18M04	**REC90171-18M04**	TUERCA	NUT	DADO
50	91490-40030	**REC91490-40030**	PASADOR	PIN	SPINOTTO
51	6E5-45987-01	**REC6E5-45987-00**	ARANDELA	WASHER	RONDELLA
53	6E5-45576-00	**REC6E5-45576-00**	ARANDELA	WASHER	RONDELLA
54	6E5-45321-00	**REC6E5-45321-00**	TAPA CAMBIO	PLATE	PIASTRA
55	6E5-44150-02	**REC6E5-44150-02**	EJE	SHIFT	ASSE
56	99001-08600	**REC99001-08600**	CLIP	CLIP	CLIP
57	93606-12019	**REC93606-12019**	PASADOR	PIN	SPINOTTO
58	90501-11M10	**REC90501-11M10**	MUELLE	SPRING	MOLLA
59	688-45375-00	**REC688-45375-00**	SELLO GOMA	RUBBER	GUARNIZIONE
60	663-45376-0094	**REC663-45376-00**	SELLO GOMA	RUBBER	GUARNIZIONE
61	6E5-45641-03	**REC6E5-45641-03**	DESLIZADOR	SLIPPER	SCORREVOLE
62	93507-32031	**REC93507-32031**	BOLA	BALL	BOLLA
63	90501-13M37	**REC90501-13M37**	MUELLE	SPRING	MOLLA

115B/C/CETO/TXRZ/TLRA - 130BETO/TLRA/TLRZ

Ref.	R.O.
REC6N6-W0078-02	6N6-W0078-02

Kit reparación Bomba agua
Water Pump kit
Kit riparazione Pompa acqua

Ref.	R.O.
REC6E5-W0001-F1	6E5-W0001-F1

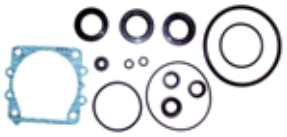

Kit juntas cola
Gearcase seal kit
Kit guarnizione piede

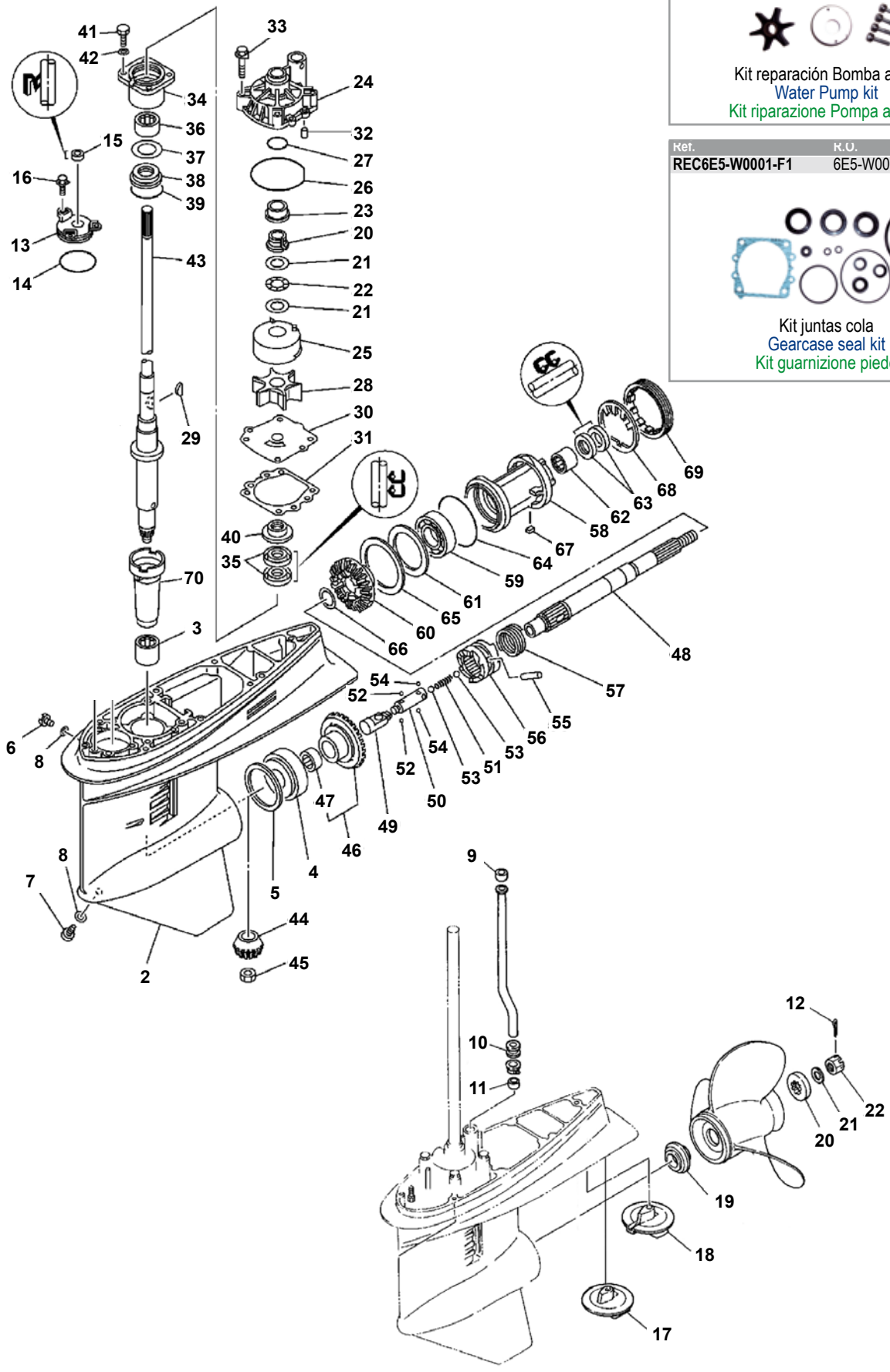

Nº	R.O. / OEM	Ref.	Descripción	Description	Descrizione
1	6E5-45300-16-8D	**REC405-A20**	COLA COMPLETA	LOWER UNIT ASSY	PIEDE COMPLETO
	6E5-45300-26-8D	**REC405-A25**	COLA COMPLETA	LOWER UNIT ASSY	PIEDE COMPLETO
2	6E5-45301-04-8D		CARTER	CASING, LOWER	CARTER
3	93315-628U9	**REC93315-628U9**	RODAMIENTO	BEARING	CUSCINETTO
4	93332-000U7	**REC93332-000U7**	RODAMIENTO	BEARING	CUSCINETTO
5	6E5-45567-01-60	**REC-6E5-45567-01**	GRUESO	SHIM	SPESSORE
6	90340-08M04	**REC90340-08014**	TAPÓN	PLUG, STRAIGHT SCREW	TAPPO
7	688-45341-00	**REC688-45341-00**	TAPÓN	PLUG DRAIN	TAPPO
8	90430-08020	**REC90430-05020**	JUNTA	GASKET	GUARNIZIONE
9	6E5-44365-00	**GLM38300**	CASQUILLO GOMA	DAMPER	BOCCOLA
10	6E5-44366-00	**GLM38301**	CASQUILLO GOMA	DAMPER	BOCCOLA
11	6E5-44365-00	**GLM38300**	CASQUILLO GOMA	DAMPER	BOCCOLA
12	91490-40030	**REC91490-40030**	PASADOR ALETA	PIN, COTTER	SPINOTTO
13	6E5-45321-00	**REC6E5-45321-00**	PLATO	PLATE	PIASTRA
14	93210-58144	**REC93210-58677**	ARO TÓRICO	O-RING	O-RING
15	93106-09014	**REC93106-09014**	RETÉN	OIL SEAL	PARAOLIO
16	90119-06M10	**REC90119-06M10**	TORNILLO	BOLT WITH WASHER	VITE
17	6E5-45371-10	**TEN01153**	ZINC HÉLICE INOX	TAB-TRIM	ZINCO ELICA INOX.
18	6E5-45371-01	**REC6E5-45371-01**	ZINC HÉLICE ALU	TAB-TRIM	ZINCO ELICA ALLU.
19	6E5-45987-01	**REC6E5-45987-00**	SEPARADOR	SPACER	SPESSORE
20	688-45997-01	**REC688-45997-00**	SEPARADOR	SPACER	SPESSORE
21	92990-18200	**GLM21221**	ARANDELA	WASHER	RONDELLA
22	90171-18M04	**REC90171-18M04**	TUERCA HÉLICE	NUT, CASTLE	DADO
23	61A-45527-00	**REC61A-45527-00**	CASQUILLO	COLLAR, DRIVE SHAFT	BOCCOLA
24	61A-44311-01	**REC61A-44311-00**	CUERPO BOMBA	HOUSING, WATER PUMP	CORPO POMPA
25	61A-44322-02	**REC61A-44322-02**	CASQUILLO INOX	INSERT, CARTRIDGE	BOCCOLA INOX.
26	93210-86M38	**REC93210-86M38**	ARO TÓRICO	O-RING	O-RING
27	93210-37160	**REC93210-37160**	ARO TÓRICO	O-RING	O-RING
28	6E5-44352-01	**REC6E5-44352-01**	TURBINA	IMPELLER	GIRANTE
29	90280-04M05	**REC90280-04M05**	CHAVETA	KEY, WOODRUF	CHIAVETTA
30	6E5-44323-00	**REC6E5-44323-00-40**	PLATO	OUTTER PLATE, CARTRIDGE	PIASTRA
31	6E5-44315-A0	**REC6E5-44315-A0**	JUNTA BOMBA	GASKET, WATER PUMP	GUARNIZIONE
32	93606-12019	**REC93606-12019**	PIN CENTRADOR	PIN DOWEL	SPINOTTO
33	90119-08M14	**REC90119-08M14**	TORNILLO	BOLT, WITH WASHER	VITE
34	6E5-45331-00-94	**REC6E5-45331-00-94**	CUERPO RODAMIENTO	HOUSING, BEARING	SEDE CUSCINETTO
35	93101-28M16	**REC93101-28M16**	RETÉN	OIL SEAL	PARAOLIO
36	93317-330U2	**REC93317-330U2**	RODAMIENTO	BEARING	CUSCINETTO
37	6E5-45587-01	**REC6E5-45587-01**	GRUESO	SHIM	SPESSORE
38	93341-930V2	**REC93341-930V2**	RODAMIENTO	BEARING	CUSCINETTO
39	93210-55M14	**GLM84215**	ARO TÓRICO	O-RING	O-RING
40	6E5-45344-00	**REC6E5-45344-00**	TAPA RETÉN	COVER, OIL SEAL	COPERCHIO
41	97095-08025		TORNILLO	BOLT	VITE
42	92995-08600	**GLM21720**	ARANDELA	WASHER	RONDELLA
43	6E5-45501-01	**REC6E5-45551-01**	EJE VERTICAL –CORTO–	DRIVE SHAFT COMP.	ASSE VERTICALE
43	6E5-45501-21	**REC6E5-45501-21**	EJE VERTICAL–LARGO–	DRIVE SHAFT COMP.	ASSE VERTICALE
44	6E5-45551-02	**REC6E5-45551-00**	ENGRANAJE	PINION	PIGNONE
45	90170-16M01	**REC90170-16M01**	TUERCA	NUT	DADO
46	6E5-45560-01	**REC6E5-45560-00**	ENGRANAJE	PINION	PIGNONE
47	93315-425U7	**REC93315-425U7**	RODAMIENTO	BEARING	CUSCINETTO
48	6E5-45611-01	**REC6E5-45611-00**	EJE HÉLICE	SHAFT, PROPELLER	ASSE ELICA
49	6E5-45641-02	**REC6E5-45641-03**	BULÓN	SHIFTER	BULLONE
50	6E5-45634-01	**REC6E5-45634-01**	PASADOR DESPLAZABLE	SLIDE, SHIFT	PASSANTE
51	90501-16M37	**REC90501-16M37**	MUELLE	SPRING, COMPRESSION	MOLLA
52	93507-32031	**REC93507-32031**	BOLA	BALL	BOLLA
53	93511-32027	**REC93511-32027**	BOLA	BALL	BOLLA
54	93503-16003	**REC93503-16003**	BOLA	BALL	BOLLA
55	90250-08M07	**REC90250-08M07**	PASADOR	PIN STRAIGHT	SPINOTTO
56	6E5-45631-01	**REC6E5-45631-00**	DESPLAZABLE	CLUTCH, DOG	SCORREVOLE
57	6E5-45633-01	**REC6E5-45633-01**	ARILLO METÁLICO	RING, CROSS PIN	O-RING
58	6E5-45332-00-94	**REC6E5-45332-00-94**	CUERPO COJINETE	HOUSING, BEARING	CUSCINETTO
59	93306-208U0	**REC93306-208U0**	RODAMIENTO	BEARING	CUSCINETTO
60	6E5-45571-01	**REC6E5-45570-00**	ENGRANAJE	PINION	PIGNONE
61	6E5-45576-00	**REC6E5-45576-00**	ARANDELA	WASHER, THURST	RONDELLA
62	93315-430U8	**REC93315-430U8**	RODAMIENTO	BEARING	CUSCINETTO
63	93101-30M17	**REC93101-30M17**	RETÉN	OIL SEAL	PARAOLIO
64	93210-86M39	**REC93210-86M39**	ARO TÓRICO	O-RING	O-RING
65	6L6-45577-00		GRUESO	SHIM	SPESSORE
66	90201-30M92	**REC90201-30M92**	ARANDELA	WASHER, PLATE	RONDELLA
67	90282-04010	**REC90282-04010**	CHAVETA	KEY, STRAIGHT	CHIAVETTA
68	688-45383-02	**REC688-45383-01**	ARANDELA	WASHER, CLAW	RONDELLA
69	688-45384-00	**REC688-45384-00**	TUERCA	NUT	DADO
70	6E5-45536-00	**REC6E5-45536-00**	CAMISA	SLEEVE	CAMICIA

V6 (1984 +)

Ref.	R.O.
REC6G5-W0078-A1	6G5-W0078-A1

Kit reparación Bomba agua
Water Pump kit
Kit riparazione Pompa acqua

Ref.	R.O.
REC6E5-W0001-F1	6E5-W0001-F1

Kit juntas cola
Gearcase seal kit
Kit guarnizione piede

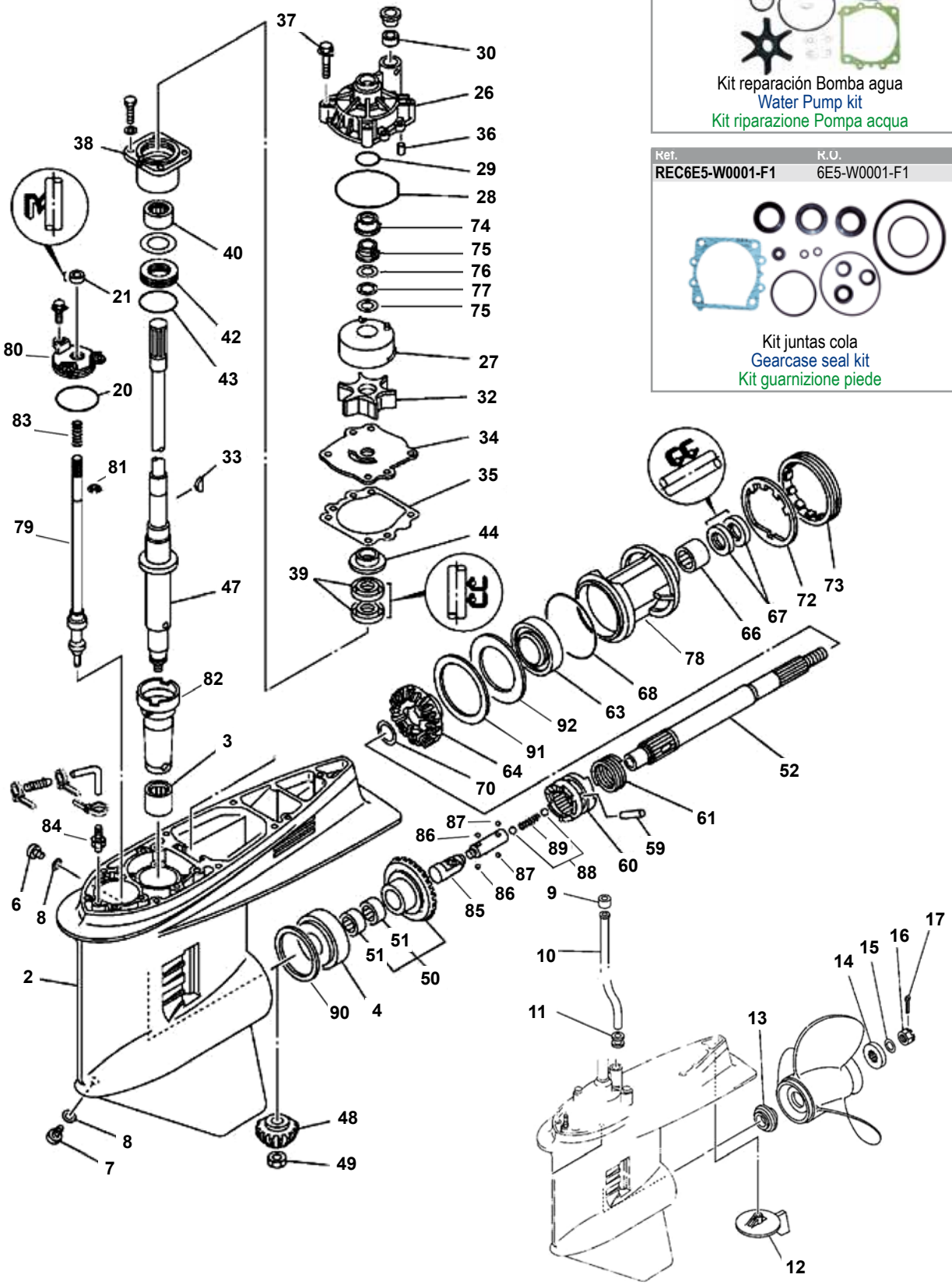

Nº	R.O. / OEM	Ref.	Descripción	Description	Descrizione
1	64D-45300-02-8D	**REC416-A20**	COLA COMPLETA	LOWER UNIT ASSY 20"	PIEDE COMPLETO
	64E-45300-02-8D		COLA COMPLETA	LOWER UNIT ASSY	PIEDE COMPLETO
	64D-45300-22-8D	**REC416-A25**	COLA COMPLETA	LOWER UNIT ASSY 25"	PIEDE COMPLETO
	64E-45300-22-8D		COLA COMPLETA	LOWER UNIT ASSY	PIEDE COMPLETO
2	6J9-45301-05-8D		CARTER	CASING, LOWER	CARTER
3	93311-928U5	**REC93311-928U5**	RODAMIENTO	BEARING	CUSCINETTO
4	93332-000V3	**REC93332-000V3**	RODAMIENTO	BEARING	CUSCINETTO
6	90340-08002	**REC90340-08014**	TAPÓN	PLUG, STRAIGHT SCREW	TAPPO
7	688-45341-10	**REC688-45341-00**	TAPÓN	PLUG, DRAIN	TAPPO
8	90430-08020	**REC90430-08020**	JUNTA	GASKET	GUARNIZIONE
9	6E5-44365-00	**GLM38300**	SELLO GOMA AGUA	DAMPER, WATER SEAL	BOCCOLA
11	6E5-44366-00	**GLM38301**	SELLO GOMA AGUA	DAMPER, WATER SEAL	BOCCOLA
12	6J9-45371-01	**GLM12883**	ÁNODO ESTABILIZ.	TAB-TRIM	ANODO
13	6E5-45978-01	**REC6E5-45978-00**	ESPACIADOR	SPACER	DISTANZIALE
14	688-45997-01	**REC688-45997-00**	ESPACIADOR	SPACER	DISTANZIALE
15	92990-18200	**GLM21221**	ARANDELA	WASHER	RONDELLA
16	90171-18M04	**REC90171-18M04**	TUERCA	NUT, CASTLE	DADO
17	91490-40030	**REC91490-40030**	PASADOR	PIN, COTTER	SPINOTTO
20	93210-58144	**REC93210-58677**	ARO TÓRICO	O-RING	O-RING
21	93106-09014	**REC93106-09014**	RETÉN	OIL SEAL	PARAOLIO
26	61A-44311-01	**REC61A-44311-00**	CUERPO BOMBA AGUA –ANTIGUA–	HOUSTING, WATER PUMP	CORPO POMPA ACQUA
26	6E5-44311-00	**REC6E5-44311-00**	CUERPO BOMBA AGUA –MODERNA–	HOUSTING, WATER PUMP	CORPO POMPA ACQUA
27	61A-44322-02	**REC61A-44322-02**	CASQUILLO INOX. –ANTIGUA–	INSERT, CARTRIDGE	BOCCOLA INOX.
27	6E5-44322-00	**REC6E5-44322-00**	CASQUILLO INOX. –MODERNA–	INSERT, CARTRIDGE	BOCCOLA INOX.
28	93210-86M38	**REC93210-86M38**	ARO TÓRICO	O-RING	O-RING
29	93210-37160	**REC93210-37160**	ARO TÓRICO	O-RING	O-RING
30	6E5-44365-00	**GLM38300**	CASQUILLO GOMA	DAMPER, WATER SEAL	BOCCOLA GOMMA
32	6E5-44352-01	**REC6E5-44352-01**	TURBINA	IMPELLER	GIRANTE
33	90280-04M05	**REC90280-04M05**	CHAVETA	KEY, WOODRUFF	CHIAVETTA
34	6G5-44323-00	**REC6G5-44323-00**	PLATO	OUTER PLATE, CARTRIDGE	PIASTRA
35	6E5-44315-A0	**REC6E5-44315-A0**	JUNTA	GASKET, WATER PUMP	GUARNIZIONE
36	93606-12019	**REC93606-12019**	CENTRADOR	PIN, DOWEL	SPINOTTO
37	90119-08M14	**REC90119-08M14**	TORNILLO	BOLT, WITH WASHER	VITE
38	6E5-45331-00-94	**REC6E5-45331-00-94**	CUERPO RODAMIENTO	HOUSING, BEARING	SEDE CUSCINETTO
39	93101-28M16	**REC93101-28M16**	RETÉN	OIL SEAL	PARAOLIO
40	93317-330U2	**REC93317-330U2**	RODAMIENTO	BEARING	CUSCINETTO
42	93341-930V2	**REC93341-930V2**	RODAMIENTO	BEARING	CUSCINETTO
43	93210-55M14	**GLM84215**	ARO TÓRICO	O-RING	O-RING
44	6E5-45344-00	**REC6E5-45344-00**	TAPA RETÉN	COVER, OIL SEAL	COPERCHIO
47	6G5-45501-21	**REC6G5-45501-21**	EJE	DRIVE SHAFT COMP. 25"	ASSE VERTICALE
48	6G5-45551-01	**REC6G5-45551-00**	ENGRANAJE	PINION	PIGNONE
49	93170-16M01	**REC93170-16M01**	TUERCA	NUT	DADO
50	6G5-45560-01	**REC6G5-45560-00**	ENGRANAJE	GEAR	INGRANAGGIO
51	93315-425V3	**REC93315-425V3**	RODAMIENTO	BEARING	CUSCINETTO
52	6J9-45611-01	**REC6J9-45611-00**	EJE HÉLICE	SHAFT, PROPELLER	ASSE ELICA
59	90250-08M07	**REC90250-08M07**	PASADOR	PIN, STRAIGHT	SPINOTTO
60	6G5-45631-00	**REC6G5-45631-00**	DESPLAZABLE	CLUTCH, DOG	SCORREVOLE
61	6E5-45633-01	**REC6E5-45633-01**	ANILLO	RING, CROSS PIN	O-RING
63	93306-209U0	**REC93306-209U0**	RODAMIENTO	BEARING	CUSCINETTO
64	6G5-45571-02	**REC6G5-45571-00**	ENGRANAJE	GEAR	INGRANAGGIO
66	93315-43061	**REC93315-43061**	RODAMIENTO	BEARING	CUSCINETTO
67	93101-30M17	**REC93101-30M17**	RETÉN	OIL SEAL	PARAOLIO
68	93210-97M55	**REC93210-97M55**	ARO TÓRICO	O-RING	O-RING
70	90201-30M92	**REC90201-30M92**	ARANDELA	WASHER, PLATE	RONDELLA
72	6G5-45383-01	**REC6G5-45383-01**	ARANDELA	WASHER, CLAW	RONDELLA
73	6G5-45384-00	**REC6G5-45384-00**	TUERCA	NUT	DADO
74	61A-45527-00	**REC61A-45527-00**	GOMA	COLLAR	GOMMA
75	61A-45538-00	**REC61A-45538-00**	ESPACIADOR	SPACER	DISTANZIALE
76	90201-22M01	**REC90201-22M01**	ARANDELA	WASHER	RONDELLA
77	90206-22M19	**REC90206-22M19**	ARANDELA	WASHER	RONDELLA
78	6J9-45332-00-CA	**REC6J9-45332-00-CA**	DIÁBOLO	BEARING CARRIER	COP. CASSA INGRANAGGI
79	6G5-44150-02	**REC6G5-44150-02**	EJE CAMBIO	SHIFT SHAFT	ASSE CAMBIO
80	6E5-45321-00	**REC6E5-45321-00**	TAPA EJE	SHIFT COVER	COPERCHIO ASSE
81	99001-08600	**REC99001-08600**	CLIP	BEARING	CUSCINETTO
82	6G5-45536-01	**REC6G5-45536-01**	CAMISA	LUBE SLEEVE	CAMISCIA
83	90501-11M10	**REC90501-11M10**	MUELLE	SPRING	MOLLA
84	6E5-45378-00	**REC6E5-45378-00**	EJE LEVA	SHIFTER	ASSE ALBERO
85	6E5-45641-03	**REC6E5-45641-03**	PITOT	PITOT	PITOT
86	93507-32031	**REC93507-32031**	BOLA	BALL	BOLLA
87	93503-16003	**REC93503-16003**	BOLA	BALL	BOLLA
88	93511-32027	**REC93511-32027**	BOLA	BALL	BOLLA
89	90501-16M37	**REC90501-16M37**	MUELLE	SPRING	MOLLA
90	6G5-45567-01	**REC6G5-45567-01**	GRUESO	SHIM	SPESSORE
91	6G5-45577-02	**REC6G5-45577-02**	GRUESO	SHIM	SPESSORE
92	6G5-45576-10	**REC6G5-45576-10**	GRUESO	SHIM	SPESSORE

225FET - 250AET - 250BET- L250AET

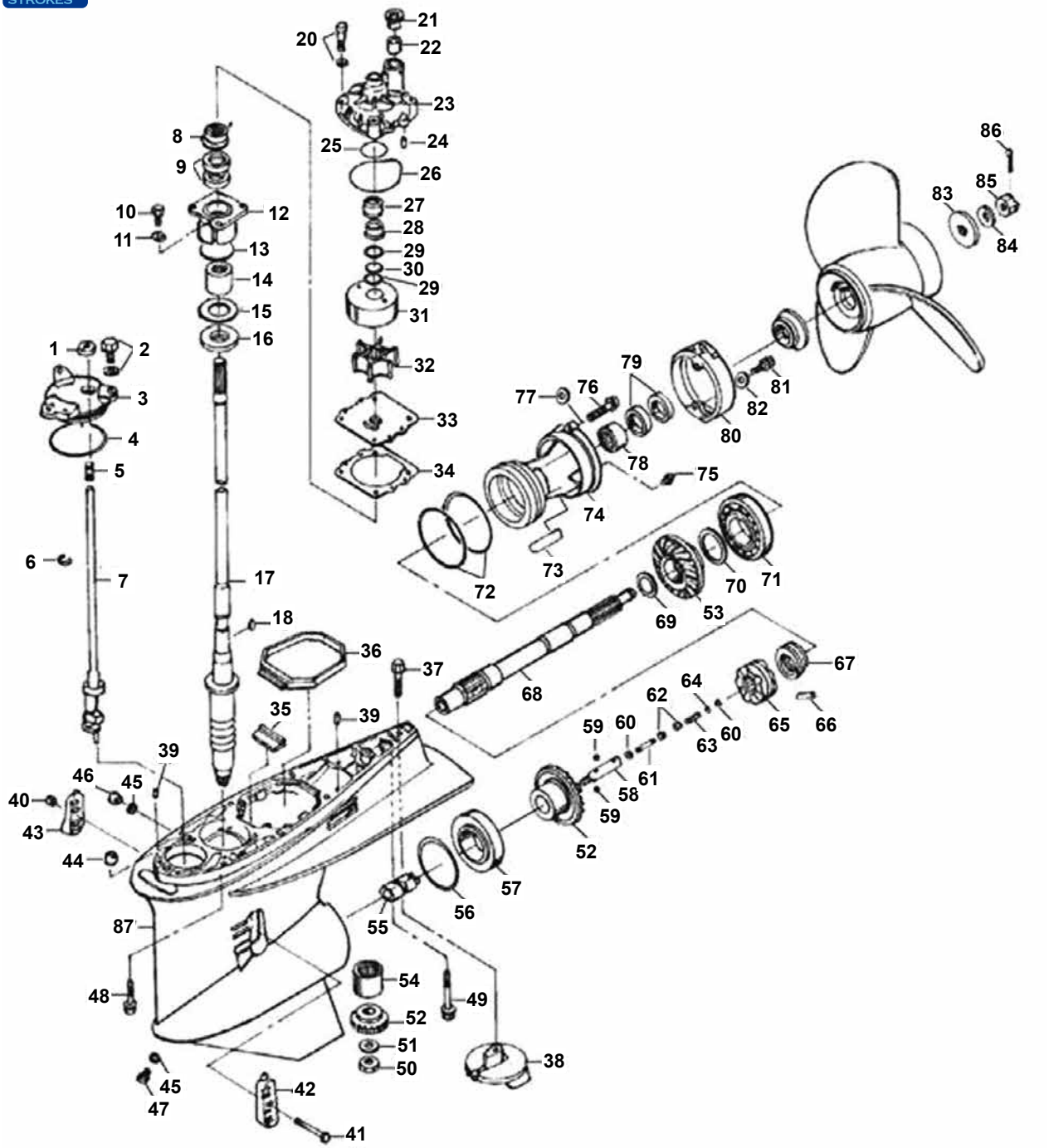

Nº	R.O. / OEM	Ref.	Descripción	Description	Descrizione
1	93106-09014	**REC93106-09014**	RETÉN	SEAL, SHIFT ROD	BOCCOLA
2	90119-06M10	**REC90119-06M10**	TORNILLO CON ARANDELA	BOLT WITH WASHER	VITE
3	61A-45321-01	**REC61A-45321-01**	TAPA	SHIFT SHAFT COVER	COPERCHIO ASSE
4	93210-65752	**REC93210-65752**	ARO TÓRICO	O-RING	O-RING
5	90501-11M10	**REC90501-11M10**	MUELLE	SPRING	MOLLA
6	99001-08600	**REC99001-08600**	CLIP	CLIP	CLIP
7	60V-44150-00	**REC60V-44150-00**	EJE	SHIFT SHAFT	ASSE
8	6E5-45344-00	**REC6E5-45344-00**	RETÉN	COVER, DRIVE SHAFT SEALS	BOCCOLA
9	93101-28M16	**REC93101-28M16**	RETÉN	DRIVE SHAFT SEAL	BOCCOLA
10	97095-08025		TORNILLO	BOLT	VITE
11	92990-08600		ARANDELA	WASHER	RONDELLA
12	61A-45331-00-94	**REC61A-45331-00-94**	CUERPO EJE	DRIVE SHAFT BEARING HOUSING	CORPO ASSE
13	93210-54534	**REC93210-54534**	ARO TÓRICO	O-RING	O-RING
14	93317-330U2	**REC93317-330U2**	RODAMIENTO	BEARING	CUSCINETTO
15	61A-45587-00/60	**REC61A-45587-00/60-0**	ESPACIADOR	SHIM KIT	SPESSORE
16	93341-93020	**REC93341-93020**	GRUESO RODAMIENTO	THRUST BEARING	SPESSORE CUSCINETTO

Nº	R.O. / OEM	Ref.	Descripción	Description	Descrizione
17	66K-45501-00	**REC66K-45501-00**	EJE	DRIVE SHAFT, 20"	ASSE VERTICALE
17	61A-45501-20	**REC61A-45501-20**	EJE	DRIVE SHAFT, 25"	ASSE VERTICALE
17	61A-45501-30	**REC61A-45501-30**	EJE	DRIVE SHAFT, 30"	ASSE VERTICALE
18	90280-04M05	**REC90280-04M05**	CHAVETA	WOODRUFF KEY	CHIAVETTA
20	90119-08M14	**REC90119-08M14**	TORNILLO CON ARANDELA	BOLT WITH WASHER	VITE
21	6E5-44312-00	**REC6E5-44312-00**	TAPA	OVER	TAPPO
22	6E5-44365-00	**REC6E5-44365-00**	CASQUILLO JUNTA	DAMPER, WATER TUBE	BOCCOLA TUBO
23	61A-44311-00	**REC61A-44311-00**	CUERPO BOMBA AGUA	WATER PUMP HOUSING	CORPO POMPA ACQUA
24	93606-12019	**REC93606-12019**	PASADOR CENTRAL	ALIGNMENT PIN	SPINOTTO
25	93210-37M67	**REC93210-37M67**	ARO TÓRICO	O-RING	O-RING
26	93210-86M38	**REC93210-86M38**	ARO TÓRICO	O-RING	O-RING
27	61A-45527-00	**REC61A-45527-00**	COLLAR	COLLAR	COLLAR
28	61A-45538-00	**REC61A-45538-00**	ESPACIADOR	SPACER	DISTANZIALE
29	90201-22M01	**REC90201-22M01**	ARANDELA	WASHER	RONDELLA
30	90206-22M19	**REC90206-22M19**	TÓRICA	WAVE WASHER	GUARNIZIONE
31	61A-44322-02	**REC61A-44322-02**	CASQUILLO INOX.	WATER PUMP LINER	BOCCOLA
32	6E5-44352-01	**REC6E5-44352-01**	TURBINA	IMPELLER	GIRANTE
33	6G5-44323-00	**REC6G5-44323-00**	BASE BOMBA	WEAR PLATE	BASE POMPA
34	6E5-44315-A0	**REC6E5-44315-A0**	JUNTA BASE	BASE GASKET	GUARNIZIONE
35	61A-45376-00-94	**REC61A-45376-00-94**	GUÍA	GUIDE	GUIDE
36	69J-45375-00	**REC69J-45375-00**	JUNTA ESCAPE	EXHAUST DAMPER	GUARNIZIONE1
37	90105-10M00		TORNILLO	BOLT, TRIM TAB	VITE
38	61A-45371-00	**REC61A-45371-00**	ÁNODO TIMÓN	TRIM TAB	ANODO
39	93608-12M05	**REC93608-12M05**	PIN	ALIGNMENT DOWELS	SPINOTTO
40	90185-05904		TUERCA	NUT, WATER SCREEN BOLT	DADO
41	90152-05003		TORNILLO	BOLT, WATER SCREEN	VITE
42	61A-45214-10	**REC61A-45214-10**	FILTRO TAPA	WATER SCREEN, PORT	COPERCHIO FILTRO
43	61A-45215-10	**REC61A-45215-10**	FILTRO TAPA	WATER SCREEN, STARBOARD	COPERCHIO FILTRO
44	663-44366-00	**REC663-44366-00**	PITOT	PITOT SEAL	PITOT
45	90430-08020	**REC90430-08020**	JUNTA	GASKET, DRAIN PLUG	GUARNIZIONE
46	90340-08002	**REC90340-08002**	TORNILLO	VENT PLUG	VITE
47	688-45341-10		TORNILLO	DRAIN PLUG	VITE
48	97575-10445	**REC97575-10445**	TORNILLO	MOUNTING BOLT	VITE
49	90119-10M89		TORNILLO	MOUNTING BOLT	VITE
50	90170-16M19	**REC90170-16M19**	PIÑÓN TUERCA	PINION NUT	PIGNONE, DADO
51	90201-16M00	**REC90201-16M00**	ARANDELA	WASHER	RONDELLA
54	93311-83280	**REC93311-83280**	PIÑÓN RODAMIENTO	PINION BEARING	PIGNONE
55	61A-45641-02	**REC61A-45641-02**	DESPLAZABLE	SHIFTER	SCORREVOLE
56	61A-45567-00		ESPACIADOR	SHIM KIT, FWD BEARING	SPESSORE
57	93332-000W1	**REC93332-000W1**	RODAMIENTO	BEARING, FORWARD GEAR	CUSCINETTO
58	61A-45634-01	**REC61A-45634-01**	DESPLAZABLE	SHIFT SLIDE	SCORREVOLE
59	93501-04011	**REC93501-04011**	BOLA	DETENT BALL	BOLLA
60	90183-02M03	**REC90183-02M03**	MUELLE	SPRING NUT	MOLLA
61	6H1-45668-00	**REC6H1-45668-00**	EJE	FREE SHAFT	ASSE
62	61A-45635-00	**REC61A-45635-00**	GRUESO	SHIFT PLUNGER	SPESSORE
63	90501-10M77	**REC90501-10M77**	MUELLE	COMPRESSION SPRING	MOLLA
64	90201-02M00	**REC90201-02M00**	ARANDELA	PLATE WASHER	RONDELLA
65	61A-45631-03	**REC61A-45631-03**	SELECTOR	CLUTCH, 2 STROKE	SELETTORE
66	61A-45632-00	**REC61A-45632-00**	PASADOR	CROSS PIN	SPINOTTO
67	61A-45633-00	**REC61A-45633-00**	MUELLE	SPRING	MOLLA
68	60V-45611-00	**REC60V-45611-00**	EJE HÉLICE	PROP SHAFT	ASSE ELICA
69	90201-31M00	**REC90201-31M00**	ARANDELA	WASHER	RONDELLA
70	61A-455770-00		ESPACIADOR	SHIM KIT, REVERSE	SPESSORE
71	93306-210U0	**REC93306-210U0**	RODAMIENTO MARCHA ATRÁS	BEARING, REVERSE GEAR	CUSCINETTO MARCIA IND.
72	93211-04384	**REC93211-04384**	ARO TÓRICO	O-RING, BEARING CARRIER	O-RING
73	99590-10114	**REC99590-10114**	PIN CENTRADO	ALIGNMENT DOWEL	SPINOTTO
74	60V-45332-00-94	**REC60V-45332-00-94**	DIÁBOLO	BEARING CARRIER	COP. CASSA INGRANAGGI
75	90370-09M00		NIPPLE	GREASE NIPPLE	NIPPLE
76	90105-08M48		TORNILLO	BOLT	VITE
77	90201-08023		ARANDELA	WASHER	RONDELLA
78	93315-43061	**REC93315-43061**	RODAMIENTO	PROP SHAFT BEARING	CUSCINETTO
79	93101-30M17	**REC93101-30M17**	RETÉN	PROP SHAFT SEAL	PARAOLIO
80	69J-45361-00-8D	**REC69J-45361-00-8D**	FUNDA INFERIOR	CAP, LOWER CASING	COPERCHIO INFERIORE
81	97095-08020		TORNILLO	BOLT	VITE
82	90201-98023		ARANDELA	WASHER	RONDELLA
83	688-45997-00	**REC688-45997-00**	ESPACIADOR	SPACER	SPESSORE
84	92990-18200		ARANDELA	WASHER	RONDELLA
85	90171-18M04	**REC90171-18M04**	TUERCA	PROP NUT	DADO
86	91490-40030	**REC91490-40030**	PIN	COTTER PIN	SPINOTTO
87	61A-45301-10-8D		CARCASA	GEARCASE SEAL KIT	CARCASSE

VZ200 (2005-09) - VZ225 (2003-09) - VZ250 (2003-09) VZ300 (2004-09)

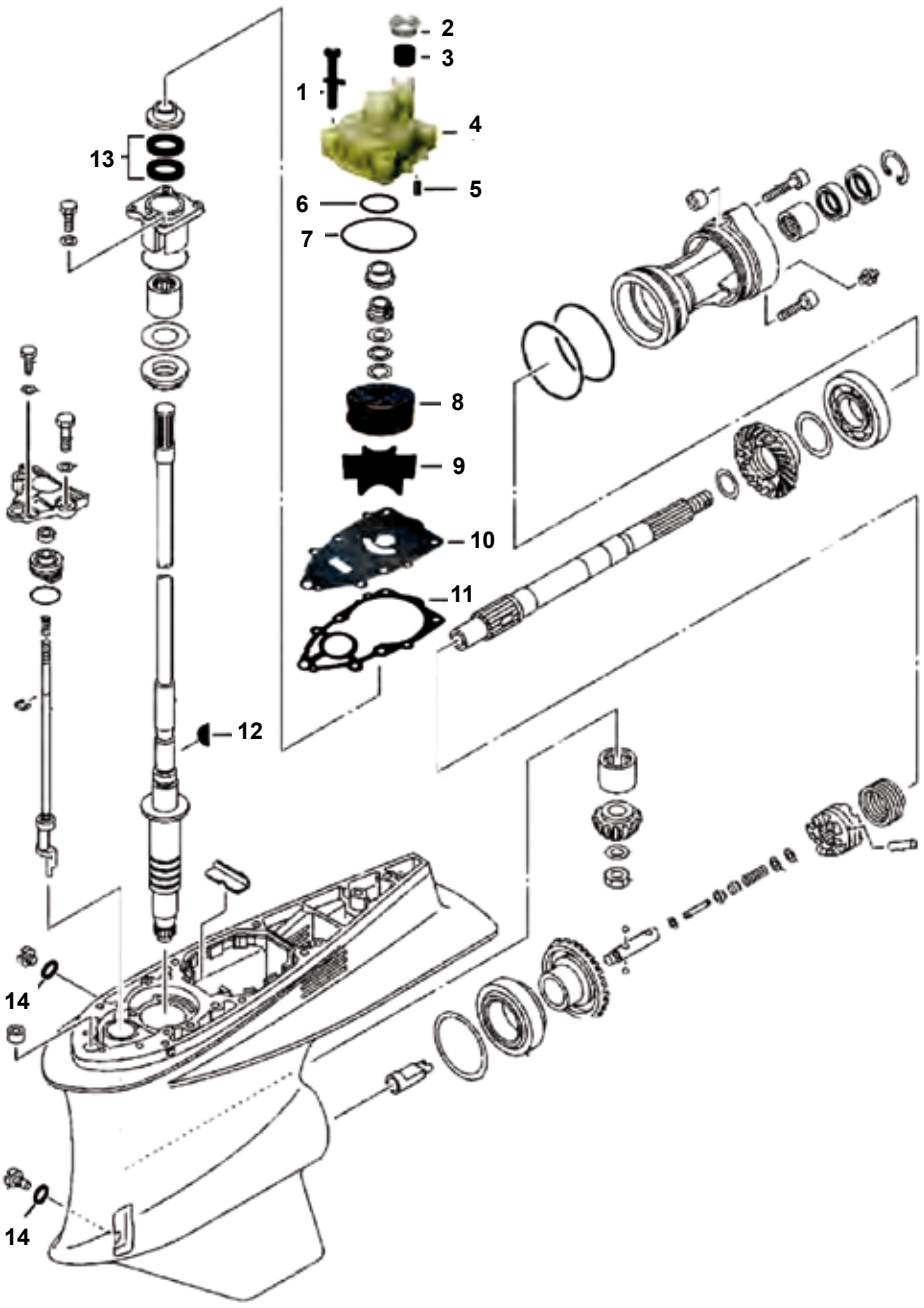

Nº	R.O. / OEM	Ref.	Descripción	Description	Descrizione
1	90119-08M14	**REC90119-08M14**	TORNILLO CON ARANDELA	BOLT W WASHER	VITE
2	6E5-44312-00	**REC6E5-44312-00**	TAPA CUERPO BOMBA AGUA	COVER, WATER PUMP HOUSING	COPERCHIO CORPO POMPA
3	6E5-44365-00	**GLM38300**	CASQUILLO GOMA	DAMPER	BOCCOLA GOMMA
4	61A-44311-01	**REC61A-44311-00**	CUERPO BOMBA AGUA	WATER PUMP HOUSING	CORPO POMPA ACQUA
5	93606-42019	**REC93606-42019**	PASADOR	PIN, DOWELL	SPINOTTO
6	93210-37M67	**REC93210-37M67**	ARO TÓRICO	O-RING	O-RING
7	93210-86M38	**REC93210-86M38**	ARO TÓRICO	O-RING	O-RING
8	61A-44322-02	**REC61A-44322-02**	CASQUILLO INOX.	PUMP CUP	BOCCOLA INOX.
9	6E5-44352-01	**REC6E5-44352-01**	IMPULSOR	IMPELLER	GIRANTE
10	60X-44323-00	**GLM12519**	TAPA BOMBA	WEAR PLATE FOR 2 STROKE	COPERCHIO POMPA
11	60X-44315-A0		JUNTA	GASKET, WATER PUMP	GUARNIZIONE
12	90280-04M05	**REC90280-04M05**	CHAVETA	KEY, WOODRUFF	CHIAVETTA
13	93101-28M16	**REC93101-28M16**	RETÉN	OIL SEAL	PARAOLIO
14	93430-08020	**REC93430-08020**	JUNTA	GASKET, DRAIN FILL	GUARNIZIONE

GUÍA IMPULSORES
IMPELLER GUIDE
GUIDA GIRANTE

Modelo / Model / Modello	R.O. / OEM	Ref. RECMAR	Ref. CEF	Medidas / Measurments / Misure A	B	C
2A/B/C	646-44352-01	**REC646-44352-01**	**CEF500324**	11,5	47,5	13,7
F2.5, 3A, MALTA	6L5-44352-00	**REC6L5-44352-00**	**CEF500322**	10	36	14,5
4A/B, F4A, 5C	6E0-44352-00	**REC6E0-44352-00**	**CEF500325**	11	40	12,6
F6A/B, F8C	68T-44352-00	**REC68T-44352-00**	**CEF500368**	11,6	53	14
E8D	662-44352-01	**REC662-44352-01**	**CEF500321**	14	40	22
6C/D,8C	6G1-44352-00	**REC6G1-44352-00**	**CEF500302**	11,9	40	18
F8, F9.9A/B/D, FT9.9A, 15D	682-44352-03	**REC682-44352-01**	**CEF500320**	13	40	22
FT8D, 9.9F, F9.9C, FT9.9D, 15F, F15A-C, F20B	63V-44352-01	**REC63V-44352-01**	**CEF500363**	12,85	53	14
20C, 25D, 30A	689-44352-02	**REC689-44352-02**	**CEF500326**	16,5	69,5	12,72
20D, 25N	6L2-44352-00	**REC6L2-44352-00**	**CEF500384**	13,97	51,2	19,05
F20A, F25A, FT25B, 25B/J/V, F30A, 30D/H/G, F40B, 40H/X, 50D	6H4-44352-02	**REC6H4-44352-02**	**CEF500385G**	16,1	51,2	19,05
F40A/C, 40V/F/Y, F45A, 50G/H, 55B, PRO50, F50A/B/F, FT50B/C/G	6H3-44352-00	**REC6H3-44352-00**	**CEF500316**	18,05	51,80	19
60F, F60A/C, FT60B/D, 70B-´03	6H3-44352-00	**REC6H3-44352-00**	**CEF500316**	18,05	51,80	19
40Q	6F5-44352-00	**REC6F5-44352-00**	**CEF500352**	16,04	69,8	22,1
60F´04-, 70B´04-, 75A/C, PRO75, 80A, 85A, 90A	688-44352-03	**REC688-44352-03**	**CEF500323**	20,1	58	30
F80A/B, F100A/D	67F-44352-00	**REC67F-44352-00**	**CEF500364**	20	58,2	34,7
F(L)115A/F(L), 150A & all V4/V6	6E5-44352-01	**REC6E5-44352-01**	**CEF500371**	22,4	89	31
F300, F350	6AW-44352-00		**CEF500389N**	24,6	89	36

Todos los motores Yamaha utilizan impulsores de 6 palas. MEDIDAS mm (A-B-C)
All Yamaha engines use 6 impellers blades. Measurements mm (A-B-C)
Tutti i motori utilizzano giranti con 6 pale. Misure mm (A-B-C)

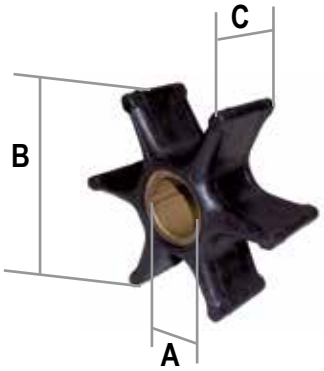

MANETAS
STARTERS HANDLE
MANIGLIA DI AVVIAMENTO

Ref.	R.O.
REC6L8-G3118-01	6L8-G3118-01

MOTORES / ENGINES / MOTORI
F4/F6/F-FT8/F6
6C/TRV/M/D
8C/M

Ref.	R.O.
REC6N0-G2177-00	6N0-G2177-00

MOTORES / ENGINES / MOTORI
F2.5
6C/T/M/D
8C/T/M

Ref.	R.O.
REC663-43118-01-4D	663-43118-01-4D

MOTORES / ENGINES / MOTORI
F20/F25
40X/E40M/E40X/40Q
E8D/55B
E60H/E
E55C
E9.9D/E15D

Ref.	R.O.
REC689-15755-00	689-15755-00

MOTORES / ENGINES / MOTORI
9.9D/15D
25NE/20DM

Ref.	R.O.
REC99999-02808	99999-02808

Ref.	R.O.
REC6E0-43118-01	6E0-43118-00/01

Ref.	R.O.
REC648-44146-00	648-44146-00

MOTORES / ENGINES / MOTORI
25Q/D
30A
20C
40Q/H/E40G/J
50D

Ref.	R.O.
REC650-44147-00	650-44147-00

MOTORES / ENGINES / MOTORI
40Q
E40G/J
40G/J

BUJES / BUSHINGS / BOCCOLE

Ref.	R.O.
PAF15-01010302	90386-22M15
REC90386-25M31	90386-25M31
PAF15-01000004	90386-30048
PAF25-01000004	90386-44M03
PAF25-01000001	90386-52M02
REC90386-30M77	90386-30M77

PAF15-01010302

REC90386-25M31

PAF15-01000004

PAF25-01000004

PAF25-01000001

REC90386-30M77

HANDLE

Ref.	R.O.
REC688-44120-12	688-44120-11/12

MOTORES / ENGINES / MOTORI
75AE/A
E75B
85A/AE

Ref.	R.O.
REC688-44120-22	688-44120-22

MOTORES / ENGINES / MOTORI
85AE

Ref.	R.O.
REC692-44120-22	692-44120-21/22

MOTORES / ENGINES / MOTORI
75AE 90ETN
80A
90A

SILENBLOCK
MOUNT DAMPERS
SILENBLOCK

Ref.	R.O.
REC63V-44514-01-CA	63V-44514-01-CA

MOTORES / ENGINES / MOTORI
9.9F/FM/MS
13.5AMH
15F/FM/MS

Ref.	R.O.
REC66T-44514-00-4D	66T-44514-00-4D

MOTORES / ENGINES / MOTORI
40X
E40X/M

Ref.	R.O.
REC670-44514-00	670-44514-00

MOTORES / ENGINES / MOTORI
55B
E55CMH

Ref.	R.O.
REC670-44555-00-94	62Y-44555-00

MOTORES / ENGINES / MOTORI
E48CM
E55CM

Ref.	R.O.
REC679-44514-00-94	679-44514-00-94

MOTORES / ENGINES / MOTORI
40QE/QWC/G/J
E40G/J

Ref.	R.O.
REC682-44514-01-94	682-44514-01-94

MOTORES / ENGINES / MOTORI
E9.9DMH
E15DMH

Ref.	R.O.
REC688-44514-00	688-44514-00

MOTORES / ENGINES / MOTORI
E60HMHD
70BETO
75CETO
90AETO

Ref.	R.O.
REC688-44555-00	688-44555-00

MOTORES / ENGINES / MOTORI
60FE/FET
70CE/ETN
E75B
80A
85A

Ref.	R.O.
REC663-44551-02-8D	663-44551-02-8D

MOTORES / ENGINES / MOTORI
F50DETL
75CETO
90AETO/TR/TRH

Ref.	R.O.
REC676-44518-00	676-44518-00

MOTORES / ENGINES / MOTORI
E40G/J
40G/J
40G

KIT JUNTAS, RETENES Y COLAS
GEAR HOUSING, GASKET & SEAL KITS
KIT GUARNIZIONE, TENUTE E PIEDI

Ref.	R.O.
REC6A1-W0001-22	6A1-W0001-22

MOTORES / ENGINES / MOTORI
2B

Ref.	R.O.
REC6A1-W0001-23	6A1-W0001-23

MOTORES / ENGINES / MOTORI
2B
2MSH

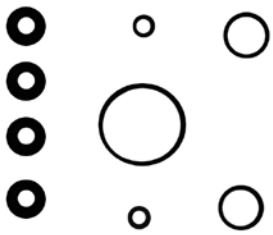

Ref.	R.O.
REC6E0-W0001-C1	6E0-W0001-C1

MOTORES / ENGINES / MOTORI
F4/F5/F6
4AC
MSH
5C/CS/CMH

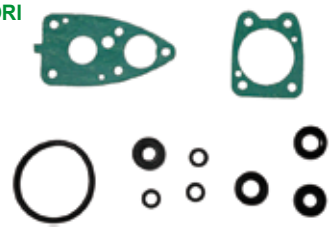

Ref.	R.O.
REC6G1-W0001-C1	6G1-W0001-C0

MOTORES / ENGINES / MOTORI
6C/CMH/MSH/TRV/D/DMH
8C/MSH/CMH/TRV

Ref.	R.O.
REC68T-W0001-20	68T-W0001-20

MOTORES / ENGINES / MOTORI
F6/F8/F9.9

Ref.	R.O.
REC69G-W0001-20	69G-W0001-20

MOTORES / ENGINES / MOTORI
FT8/T8
FT9.9/T9.9

Ref.	R.O.
REC6G9-W0001-C4	6G9-W0001-C4

MOTORES / ENGINES / MOTORI
F8
F9.9

Ref.	R.O.
REC6G9-W0001-C6	6G9-W0001-C6

MOTORES / ENGINES / MOTORI
F8
F9.9

Ref.	R.O.
REC6G8-W0001-C6	6G8-W0001-C6

MOTORES / ENGINES / MOTORI
FT9.9
T9.9

Ref.	R.O.
REC6G8-W0001-C2	6G8-W0001-C2

MOTORES / ENGINES / MOTORI
FT9.9

Ref.	R.O.
REC66M-W0001-20	66M-W0001-20

MOTORES / ENGINES / MOTORI
F9.9
F13.5
F15

Ref.	R.O.
REC6G9-W0001-C2	6G9-W0001-C2

MOTORES / ENGINES / MOTORI
F9.9

YAMAHA

RECAMBIOS MARINOS S.L.

Ref.	R.O.
REC6G8-W0001-C0	6G8-W0001-C0

MOTORES / ENGINES / MOTORI
FT9.9

Ref.	R.O.
REC6G8-W0001-C4	6G8-W0001-C4

MOTORES / ENGINES / MOTORI
FT9.9

Ref.	R.O.
REC683-W0001-21	683-W0001-C1

MOTORES / ENGINES / MOTORI
9.9D/15D

Ref.	R.O.
REC6G9-W0001-C0	6G9-W0001-C0

MOTORES / ENGINES / MOTORI
F9.9

Ref.	R.O.
REC63V-W0001-21	63V-W0001-21

MOTORES / ENGINES / MOTORI
9.9/15F
13.5AWH

Ref.	R.O.
REC63V-W0001-22	63V-W0001-22

MOTORES / ENGINES / MOTORI
9.9/15F
13.5AWH

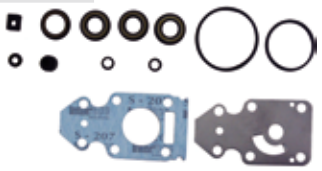

Ref.	R.O.
REC689-W0001-C2	689-W0001-C2

MOTORES / ENGINES / MOTORI
20C/CM
25D
30A

Ref.	R.O.
REC65W-W0001-20	65W-W0001-20

MOTORES / ENGINES / MOTORI
F20/25

Ref.	R.O.
REC6L2-W0001-C3	6L2-W0001-C3

MOTORES / ENGINES / MOTORI
20DMH/MLH
25D/NWC/MLH/MSH

Ref.	R.O.
REC61N-W0001-E1	61N-W0001-E1

MOTORES / ENGINES / MOTORI
25V/VM/E25A
30G/GE

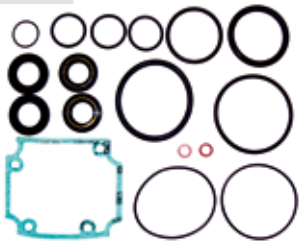

Ref.	R.O.
REC67C-W0001-22	67C-W0001-22

MOTORES / ENGINES / MOTORI
FT25
T25
F30/40

Ref.	R.O.
GLM87833	6J8-W0001-21

MOTORES / ENGINES / MOTORI
25J
30D/DMH

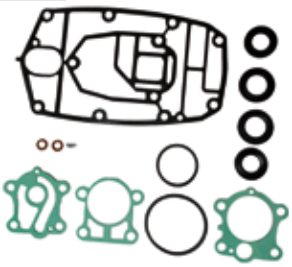

Ref.	R.O.
REC6H3-W0001-22	6H3-W0001-22

MOTORES / ENGINES / MOTORI
25B/BETO
50G/GEO/GETO
60FETO/FEDO/FEO/F/TLR
70B/BETO/BEMO

Ref.	R.O.
REC67F-W0001-20	

MOTORES / ENGINES / MOTORI
F30/40
FT25
T25

Ref.	R.O.
REC62Y-W0001-22	62Y-W0001-22

MOTORES / ENGINES / MOTORI
F40/50

Ref.	R.O.
REC62Y-W0001-20	62Y-W0001-20

MOTORES / ENGINES / MOTORI
F40/45/50

Ref.	R.O.
REC62Y-W0001-21	62Y-W0001-21

MOTORES / ENGINES / MOTORI
F40/50

Ref.	R.O.
REC6F5-W0001-C0	6F5-W0001-C0

MOTORES / ENGINES / MOTORI
40G/E40G

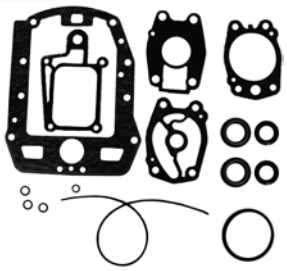

Ref.	R.O.
REC66T-W0001-20	66T-W0001-20

MOTORES / ENGINES / MOTORI
40X/E40X-MH/XW
E40MCH

Ref.	R.O.
REC6A0-W0001-21	6A0-W0001-21

MOTORES / ENGINES / MOTORI
40QE/G

Ref.	R.O.
REC64J-W0001-20	64J-W0001-20

MOTORES / ENGINES / MOTORI
F45/50
FT50
T50

Ref.	R.O.
REC698-W0001-21	698-W0001-21

MOTORES / ENGINES / MOTORI
E48
E48CMH
55B/BM/BET
E55CMH

Ref.	R.O.
REC63D-W0001-20	63D-W0001-20

MOTORES / ENGINES / MOTORI
50H/40YETO/VE/C40T

Ref.	R.O.
REC64J-W0001-22	64J-W0001-22

MOTORES / ENGINES / MOTORI
FT50/T50

Ref.	R.O.
REC64J-W0001-21	64J-W0001-21

MOTORES / ENGINES / MOTORI
FT50, T50

Ref.	R.O.
GLM87812	698-W0001-20

MOTORES / ENGINES / MOTORI
55BET

Ref.	R.O.
REC689-W0001-21	689-W0001-21

MOTORES / ENGINES / MOTORI
55B

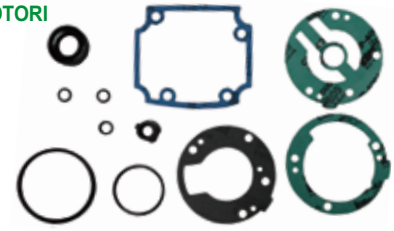

Ref.	R.O.
REC6H3-W0001-C1	6H3-W0001-21

MOTORES / ENGINES / MOTORI
60FEO/FETO
70B/BEO/BEH/CE

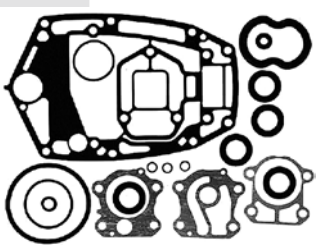

Ref.	R.O.
REC69D-W0001-20	69D-W0001-20

MOTORES / ENGINES / MOTORI
E60H

Ref.	R.O.
REC6H2-W0001-20	6H2-W0001-20

MOTORES / ENGINES / MOTORI
60FETO/TR
70BETO/TR

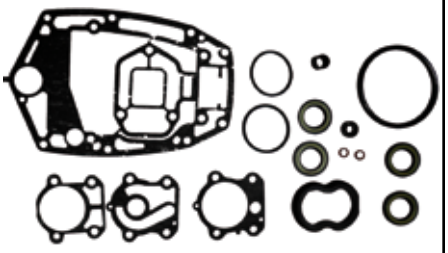

Ref.	R.O.
REC69W-W0001-20	69W-W0001-20

MOTORES / ENGINES / MOTORI
F60

Ref.	R.O.
REC688-W0001-22	688-W0001-22

MOTORES / ENGINES / MOTORI
75CETO/E75B/AED
85A/AED/AET
90AETO/TR

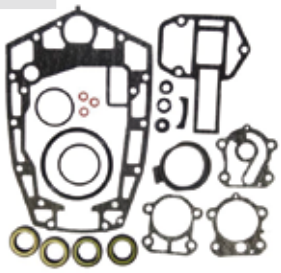

Ref.	R.O.
REC688-W0001-20	688-W0001-20

MOTORES / ENGINES / MOTORI
75A/AE
80A
85A/AE
90A/AEO/AETO/ETN

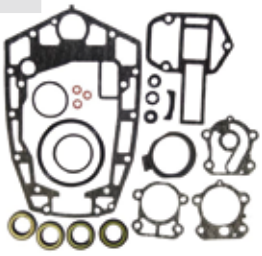

Ref.	R.O.
REC67F-W0001-20	67F-W0001-20

MOTORES / ENGINES / MOTORI
F80/100

Ref.	R.O.
REC68V-W0001-20	68V-W0001-20

MOTORES / ENGINES / MOTORI
F115

Ref.	R.O.
REC6E5-W0001-F1	6E5-W0001-F1

MOTORES / ENGINES / MOTORI
115BETO/B/CEO/TXR
130BETO

Ref.	R.O.
GLM87839	6F3-W0001-21

MOTORES / ENGINES / MOTORI
115CETO/CEO
130BETO

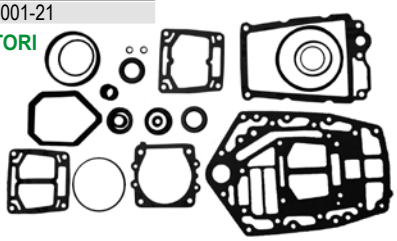

Ref.	R.O.
GLM87831	6E5-W0001-21

MOTORES / ENGINES / MOTORI
E115AE

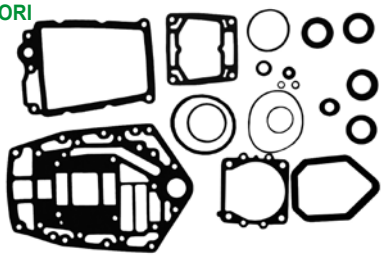

Ref.	R.O.
REC65N-W0001-20	65N-W0001-20

MOTORES / ENGINES / MOTORI
D150H

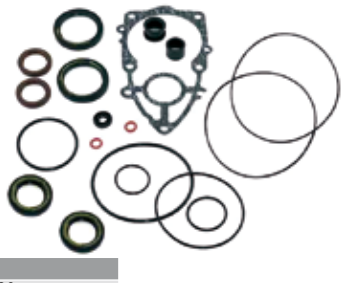

Ref.	R.O.
REC69J-W0001-20-00	69J-W0001-20

MOTORES / ENGINES / MOTORI
F200/225

Ref.	R.O.
GLM87842	

MOTORES / ENGINES / MOTORI
225C/CETO
250A/AET/AETO
250B

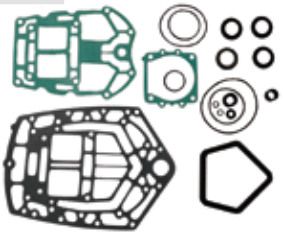

GUÍA PIEZAS COLA
STERN DRIVE COMPONENTS APPLICATIONS
GUIDA RICAMBI PIEDI

MODELO MODEL MODELLO	DESDE FROM DELL' ANNO	HASTA TO ALL' ANNO	PIÑÓN ATAQUE GEAR PIGNONE INNEST0	PIÑÓN AVANTE GEAR FORWARD PIGNONE MARCIA AVANTI	PIÑÓN M. ATRÁS GEAR REVERSE PIGNONE MAR. INDIETRO	PIÑÓN M. ATRÁS GEAR REVERSE PIGNONE MAR. INDIETRO	MUELLE SPRING MOLLA	EJE HÉLICE PROPELLER SHAFT ASSE ELICA	EJE VERTICAL DRIVESHAFT ASSEMBLY ASSE VERT.	DIÁBOLO CARRIER COP. CASSA INGRANAGGI
2B	1981	2003	REC646-45551-00	REC646-45560-00						
4A	1985	1987	REC6E0-45551-00	REC6E0-45560-00	REC6E0-45570-00	REC6E0-45631-00		REC6E0-45611-00	REC6E0-45511-01	PAF4-03050001
4AC	1987	1999	REC6E0-45551-00	REC6E0-45560-00	REC6E0-45570-00	REC6E0-45631-00		REC6E0-45611-00	REC6E0-45511-01	PAF4-03050001
4AC MHL 4AC MHS	2001	2003	REC6E0-45551-00	REC6E0-45560-00	REC6E0-45570-00	REC6E0-45631-00		REC6E0-45611-00	REC6E0-45511-11	PAF4-03050001
4AS	1987	1996	REC6E0-45551-00	REC6E0-45560-00	REC6E0-45570-00	REC6E0-45631-00		REC6E0-45611-00	REC6E0-45511-01	PAF4-03050001
4BC	1998	1999	REC6E0-45551-00	REC6E0-45560-00	REC6E0-45570-00	REC6E0-45631-00		REC6E0-45611-00	REC6E5-45511-01	PAF4-03050001
4BC	1999	1999	REC6E0-45551-00	REC6E0-45560-00	REC6E0-45570-00	REC6E0-45631-00		REC6E0-45611-00	REC6E0-45511-01	PAF4-03050001
4BC MHL 4BC MHS	2001	2003	REC6E0-45551-00	REC6E0-45560-00	REC6E0-45570-00	REC6E0-45631-00		REC6E0-45611-00	REC6E0-45511-11	PAF4-03050001
F4A	1998	2000	REC6E0-45551-00	PAF4-03010000	PAF4-03040000				REC6E0-45511-11	PAF4-03050001
F4A MH F4A MHL	2000	2000	REC6E0-45551-00	PAF4-03010000	PAF4-03040000				REC6E0-45511-11	PAF4-03050001
F4A MHS	2001	2001	REC6E0-45551-00	PAF4-03010000	PAF4-03040000				REC6E0-45511-11	PAF4-03050001
5C	1985	1999	REC6E0-45551-00	REC6E0-45560-00	REC6E0-45570-00	REC6E0-45631-00			REC6E0-45511-01	PAF4-03050001
5C MHL 5C MHS	2001	2006	REC6E0-45551-00	REC646-45560-00	REC6E0-45570-00	REC6E0-45631-00			REC6E0-45511-11	PAF4-03050001
5CS	1987	1996	REC6E0-45551-00	REC646-45560-00	REC6E0-45570-00	REC6E0-45631-00			REC6E0-45511-01	
6C	1990	1998	REC6N0-G5551-00	REC6N0-G5560-00	REC6N0-G5571-00	REC6G1-45631-00		REC6G1-45611-00		
6C MHL 6C MHS	2001	2006	REC6N0-G5551-00	REC6N0-G5560-00	REC6N0-G5571-00	REC6G1-45631-00		REC6G1-45611-00		
6C WHL 6C WHS	2001	2001	REC6N0-G5551-00	REC6N0-G5560-00	REC6N0-G5571-00	REC6G1-45631-00		REC6G1-45611-00		
6D	1990	1998	REC6N0-G5551-00	REC6N0-G5560-00	REC6N0-G5571-00	REC6G1-45631-00		REC6G1-45611-00		
6D MHL 6D MHS	2001	2006	REC6N0-G5551-00	REC6N0-G5560-00	REC6N0-G5571-00	REC6G1-45631-00		REC6G1-45611-00		
6D WHS	2001	2001	REC6N0-G5551-00	REC6N0-G5560-00	REC6N0-G5571-00	REC6G1-45631-00		REC6G1-45611-00		
8C	1990	1998	REC6N0-G5551-00	REC6N0-G5560-00	REC6N0-G5571-00	REC6G1-45631-00		REC6G1-45611-00		
8C MHL 8C MHS	2001	2006	REC6N0-G5551-00	REC6N0-G5560-00	REC6N0-G5571-00	REC6G1-45631-00		REC6G1-45611-00		
8C MHX	2001	2003	REC6N0-G5551-00	REC6N0-G5560-00	REC6N0-G5571-00	REC6G1-45631-00		REC6G1-45611-00		
8C WHL 8C WHS	2001	2002	REC6N0-G5551-00	REC6N0-G5560-00	REC6N0-G5571-00	REC6G1-45631-00		REC6G1-45611-00		
E8D	1997	1998	REC647-45551-00	REC647-45560-00	REC647-45570-00					
E8D MH	1999	1999	REC647-45551-00	REC647-45560-00	REC647-45570-00					
F8A	1986	1989				REC682-45631-00	REC648-45633-00			
F8B	1985	1999	REC6E7-45551-00	REC6E7-45560-00	REC6E7-45570-00	REC682-45631-00	REC648-45633-00	REC683-45611-00		
F8B E F8B EH F8B MH	1999	1999	REC6E7-45551-00	REC6E7-45560-00	REC6E7-45570-00	REC682-45631-00	REC648-45633-00	REC683-45611-00		
FT8D EL	2001	2004	REC66R-45551-00	REC66R-45560-00	REC66R-45570-00		REC648-45633-00	REC683-45611-00	REC69G-45510-20	
FT8D EPL	2001	2004	REC66R-45551-00	REC66R-45560-00	REC66R-45570-00		REC648-45633-00	REC683-45611-00	REC69G-45510-10	
FT8D EPX	2001	2002	REC66R-45551-00	REC66R-45560-00	REC66R-45570-00		REC648-45633-00	REC683-45611-00	REC69G-45510-10	
FT8D EX	2001	2004	REC66R-45551-00	REC66R-45560-00	REC66R-45570-00		REC648-45633-00	REC683-45611-00	REC69G-45510-20	
FT8D MHL FT8D MHX	2001	2004	REC66R-45551-00	REC66R-45560-00	REC66R-45570-00		REC648-45633-00	REC683-45611-00	REC69G-45510-10	
9.9D	1985	1989	REC6E7-45551-00	REC6E7-45560-00	REC6E7-45570-00	REC682-45631-00	REC648-45633-00	REC683-45611-00	REC69G-45510-20	
9.9D	1990	1995	REC6E7-45551-00	REC6E7-45560-00	REC6E7-45570-00	REC682-45631-00	REC648-45633-00	REC683-45611-00	REC6E7-45501-11	REC683-45361-02-4D
9.9F	1995	1999	REC63V-45551-00	REC6E7-45560-00	REC6E7-45570-00	REC682-45631-00	REC648-45633-00	REC683-45611-00	REC63V-45501-01 S 17,3" REC63V-45501-10 L 22,3"	REC683-45361-02-4D
9.9F MH	2000	2000	REC63V-45551-00	REC6E7-45560·00	REC6E7-45570-00	REC682-45631-00	REC648-45633-00	REC683-45611-00	REC63V-45501-01 S 17,3" REC63V-45501-11 L 22,3"	REC683-45361-02-4D
9.9F MHL 9.9F MHS	2001	2006	REC63V-45551-00	REC6E7-45560-00	REC6E7-45570-00	REC682-45631-00	REC648-45633-00	REC683-45611-00	REC63V-45501-01 S 17,3" REC63V-45501-11 L 22,3"	REC683-45361-02-4D
9.9F WC 9.9F WH	2000	2000	REC63V-45551-00	REC6E7-45560-00	REC6E7-45570-00	REC682-45631-00	REC648-45633-00	REC683-45611-00	REC63V-45501-01 S 17,3" REC63V-45501-11 L 22,3"	REC683-45361-02-4D
9.9F WHL 9.9F WHS	2001	2001	REC63V-45551-00	REC6E7-45560-00	REC6E7-45570-00	REC682-45631-00	REC648-45633-00	REC683-45611-00	REC63V-45501-01 S 17,3" REC63V-45501-11 L 22,3"	REC683-45361-02-4D
F9.9B	1985	1997	REC6E7-45551-00	REC6E7-45560-00	REC6E7-45570-00	REC682-45631-00	REC648-45633-00	REC683-45611-00		REC683-45361-02-4D
F9.9B E	1999	1999	REC6E7-45551-00	REC6E7-45560-00	REC6E7-45570-00	REC682-45631-00	REC648-45633-00	REC683-45611-00		REC683-45361-02-4D
F9.9B EH	1999	1999	REC6E7-45551-00	REC6E7-45560-00	REC6E7-45570-00	REC682-45631-00		REC683-45611-00		REC683-45361-02-4D
F9.9B MH	1999	1999	REC6E7-45551-00	REC6E7-45560-00	REC6E7-45570-00	REC682-45631-00	REC648-45633-00	REC683-45611-00		REC683-45361-02-4D
F9.9C	1998	1998	REC63V-45551-00	REC6E7-45560-00	REC6E7-45570-00	REC682-45631-00	REC648-45633-00	REC683-45611-00	REC63V-45501-01 S 17,3" REC63V-45501-11 L 22,3"	REC683-45361-02-4D
F9.9C E	2000	2000	REC63V-45551-00	REC6E7-45560-00	REC6E7-45570-00	REC682-45631-00	REC648-45633-00	REC683-45611-00	REC63V-45501-01 S 17,3" REC63V-45501-11 L 22,3"	REC683-45361-02-4D

RECAMBIOS MARINOS S.L.

MODELO MODEL MODELLO	DESDE FROM DELL' ANNO	HASTA TO ALL' ANNO	PIÑÓN ATAQUE GEAR PIGNONE INNEST0	PIÑÓN AVANTE GEAR FORWARD PIGNONE MARCIA AVANTI	PIÑÓN M. ATRÁS GEAR REVERSE PIGNONE MAR. INDIETRO	PIÑÓN M. ATRÁS GEAR REVERSE PIGNONE MAR. INDIETRO	MUELLE SPRING MOLLA	EJE HÉLICE PROPELLER SHAFT ASSE ELICA	EJE VERTICAL DRIVESHAFT ASSEMBLY ASSE VERT.	DIÁBOLO CARRIER COP. CASSA INGRANAGGI
F9.9C EH	2000	2000	REC63V-45551-00	REC6E7-45560-00	REC6E7-45570-00	REC682-45631-00	REC648-45633-00	REC683-45611-00	REC63V-45501-01 S 17,3" REC63V-45501-11 L 22,3"	REC683-45361-02-4D
F9.9C EL **F9.9C ES**	2001	2006	REC63V-45551-00	REC6E7-45560-00	REC6E7-45570-00	REC682-45631-00	REC648-45633-00	REC683-45611-00	REC63V-45501-01 S 17,3" REC63V-45501-11 L 22,3"	REC683-45361-02-4D
F9.9C MH	2000	2000	REC63V-45551-00	REC6E7-45560-00	REC6E7-45570-00	REC682-45631-00	REC648-45633-00	REC683-45611-00	REC63V-45501-01 S 17,3" REC63V-45501-11 L 22,3"	REC683-45361-02-4D
F9.9C MHL **F9.9C MHS**	2001	2006	REC63V-45551-00	REC6E7-45560-00	REC6E7-45570-00	REC682-45631-00	REC648-45633-00	REC683-45611-00	REC63V-45501-01 S 17,3" REC63V-45501-11 L 22,3"	REC683-45361-02-4D
FT9.9A	1999	1999	REC66R-45551-00	REC66R-45560-00	REC66R-45570-00	REC682-45631-00	REC648-45633-00			
FT9.9D	1999	1999	REC66R-45551-00	REC66R-45560-00	REC66R-45570-00	REC682-45631-00	REC648-45633-00	REC683-45611-00		
FT9.9D E **FT9.9D EH**	2000	2000	REC66R-45551-00	REC66R-45560-00	REC66R-45570-00	REC682-45631-00	REC648-45633-00	REC683-45611-00		
FT9.9D EHL **FT9.9D EHX**	2001	2001	REC66R-45551-00	REC66R-45560-00	REC66R-45570-00	REC682-45631-00	REC648-45633-00	REC683-45611-00		
FT9.9D EL	2001	2006	REC66R-45551-00	REC66R-45560-00	REC66R-45570-00	REC682-45631-00	REC648-45633-00	REC683-45611-00		
FT9.9D EP	2000	2000	REC66R-45551-00	REC66R-45560-00	REC66R-45570-00	REC682-45631-00	REC648-45633-00			
FT9.9D EPL **FT9.9D EPX**	2001	2002	REC66R-45551-00	REC66R-45560-00	REC66R-45570-00	REC682-45631-00	REC648-45633-00	REC683-45611-00		
FT9.9D ES	2001	2001	REC66R-45551-00	REC66R-45560-00	REC66R-45570-00	REC682-45631-00	REC648-45633-00	REC683-45611-00		
FT9.9D EX	2001	2006	REC66R-45551-00	REC66R-45560-00	REC66R-45570-00	REC682-45631-00	REC648-45633-00	REC683-45611-00		
FT9.9D MH	2000	2000	REC66R-45551-00	REC66R-45560-00	REC66R-45570-00	REC682-45631-00	REC648-45633-00	REC683-45611-00		
FT9.9D MHL **FT9.9D MHX**	2001	2006	REC66R-45551-00	REC66R-45560-00	REC66R-45570-00	REC682-45631-00	REC648-45633-00	REC683-45611-00		
13.5A	1999	1999	REC63V-45551-00	REC6E7-45560-00	REC6E7-45570-00	REC682-45631-00	REC648-45633-00	REC683-45611-00	REC63V-45501-01 S 17,3" REC63V-45501-11 L 22,3"	REC683-45361-02-4D
13.5A MH	2000	2000	REC63V-45551-00	REC6E7-45560-00	REC6E7-45570-00	REC682-45631-00	REC648-45633-00	REC683-45611-00	REC63V-45501-01 S 17,3" REC63V-45501-11 L 22,3"	REC683-45361-02-4D
13.5A MHL **13.5A MHS**	2001	2004	REC63V-45551-00	REC6E7-45560-00	REC6E7-45570-00	REC682-45631-00	REC648-45633-00	REC683-45611-00	REC63V-45501-01 S 17,3" REC63V-45501-11 L 22,3"	REC683-45361-02-4D
13.5A WH	2000	2000	REC63V-45551-00	REC6E7-45560-00	REC6E7-45570-00	REC682-45631-00	REC648-45633-00	REC683-45611-00	REC63V-45501-01 S 17,3" REC63V-45501-11 L 22,3"	REC683-45361-02-4D
F13.5A EHL	2005	2006	REC63V-45551-00	REC6E7-45560-00	REC6E7-45570-00	REC682-45631-00	REC648-45633-00	REC683-45611-00	REC63V-45501-01 S 17,3" REC63V-45501-11 L 22,3"	REC683-45361-02-4D
F13.5A EPL **F13.5A EHS**	2005	2005	REC63V-45551-00	REC6E7-45560-00	REC6E7-45570-00	REC682-45631-00	REC648-45633-00	REC683-45611-00	REC63V-45501-01 S 17,3" REC63V-45501-11 L 22,3"	REC683-45361-02-4D
F13.5A MH	2001	2001	REC63V-45551-00	REC6E7-45560-00	REC6E7-45570-00	REC682-45631-00		REC683-45611-00	REC63V-45501-01 S 17,3" REC63V-45501-11 L 22,3"	REC683-45361-02-4D
F13.5A MHL **F13.5A MHS**	2002	2006	REC63V-45551-00	REC6E7-45560-00	REC6E7-45570-00	REC682-45631-00	REC648-45633-00	REC683-45611-00	REC63V-45501-01 S 17,3" REC63V-45501-11 L 22,3"	REC683-45361-02-4D
15D	1985	1989	REC6E7-45551-00	REC6E7-45560-00	REC6E7-45570-00	REC682-45631-00	REC648-45633-00	REC683-45611-00		
15D	1990	1995	REC6E7-45551-00	REC6E7-45560-00	REC6E7-45570-00	REC682-45631-00	REC648-45633-00	REC683-45611-00	REC6E7-45501-11	REC683-45361-02-4D
15F	1995	1999	REC63V-45551-00	REC6E7-45560-00	REC6E7-45570-00	REC682-45631-00	REC648-45633-00	REC683-45611-00	REC63V-45501-01 S 17,3" REC63V-45501-10 L 22,3"	REC683-45361-02-4D
15F MH	2000	2000	REC63V-45551-00	REC6E7-45560-00	REC6E7-45570-00	REC682-45631-00	REC648-45633-00	REC683-45611-00	REC63V-45501-01 S 17,3" REC63V-45501-11 L 22,3"	REC683-45361-02-4D
15F MHL **15F MHS**	2001	2006	REC63V-45551-00	REC6E7-45560-00	REC6E7-45570-00	REC682-45631-00	REC648-45633-00	REC683-45611-00	REC63V-45501-01 S 17,3" REC63V-45501-11 L 22,3"	REC683-45361-02-4D
15F WC	2000	2000	REC63V-45551-00	REC6E7-45560-00	REC6E7-45570-00	REC682-45631-00	REC648-45633-00	REC683-45611-00	REC63V-45501-01 S 17,3" REC63V-45501-11 L 22,3"	REC683-45361-02-4D
15F WCL	2001	2003	REC63V-45551-00	REC6E7-45560-00	REC6E7-45570-00	REC682-45631-00	REC648-45633-00	REC683-45611-00	REC63V-45501-01 S 17,3" REC63V-45501-11 L 22,3"	REC683-45361-02-4D

MODELO MODEL MODELLO	DESDE FROM DELL' ANNO	HASTA TO ALL' ANNO	PIÑÓN ATAQUE GEAR PIGNONE INNEST0	PIÑÓN AVANTE GEAR FORWARD PIGNONE MARCIA AVANTI	PIÑÓN M. ATRÁS GEAR REVERSE PIGNONE MAR. INDIETRO	PIÑÓN M. ATRÁS GEAR REVERSE PIGNONE MAR. INDIETRO	MUELLE SPRING MOLLA	EJE HÉLICE PROPELLER SHAFT ASSE ELICA	EJE VERTICAL DRIVESHAFT ASSEMBLY ASSE VERT.	DIÁBOLO CARRIER COP. CASSA INGRANAGGI
15F WCS	2001	2002	REC63V-45551-00	REC6E7-45560-00	REC6E7-45570-00	REC682-45631-00	REC648-45633-00	REC683-45611-00	REC63V-45501-01 S 17,3" REC63V-45501-11 L 22,3"	REC683-45361-02-4D
F15A	1998	1998	REC63V-45551-00	REC6E7-45560-00	REC6E7-45570-00	REC682-45631-00	REC648-45633-00	REC683-45611-00	REC63V-45501-01 S 17,3" REC63V-45501-11 L 22,3"	REC683-45361-02-4D
F15A E F15A EH	1998	2000	REC63V-45551-00	REC6E7-45560-00	REC6E7-45570-00	REC682-45631-00	REC648-45633-00	REC683-45611-00	REC63V-45501-01 S 17,3" REC63V-45501-11 L 22,3"	REC683-45361-02-4D
F15A EHS F15A EHL	2001	2006	REC63V-45551-00	REC6E7-45560-00	REC6E7-45570-00	REC682-45631-00	REC648-45633-00	REC683-45611-00	REC63V-45501-01 S 17,3" REC63V-45501-11 L 22,3"	REC683-45361-02-4D
F15A EL	2001	2006	REC63V-45551-00	REC6E7-45560-00	REC6E7-45570-00	REC682-45631-00	REC648-45633-00	REC683-45611-00	REC63V-45501-01 S 17,3" REC63V-45501-11 L 22,3"	REC683-45361-02-4D
F15A EP	2000	2000	REC63V-45551-00	REC6E7-45560-00	REC6E7-45570-00	REC682-45631-00	REC648-45633-00			REC683-45361-02-4D
F15A EPL F15A EPS	2001	2006	REC63V-45551-00	REC6E7-45560-00	REC6E7-45570-00	REC682-45631-00	REC648-45633-00	REC683-45611-00		REC683-45361-02-4D
F15A ES	2001	2006	REC63V-45551-00	REC6E7-45560-00	REC6E7-45570-00	REC682-45631-00	REC648-45633-00	REC683-45611-00	REC63V-45501-01 S 17,3" REC63V-45501-11 L 22,3"	REC683-45361-02-4D
F15A MH	1998	2000	REC63V-45551-00	REC6E7-45560-00	REC6E7-45570-00	REC682-45631-00	REC648-45633-00	REC683-45611-00	REC63V-45501-01 S 17,3" REC63V-45501-11 L 22,3"	REC683-45361-02-4D
F15A MHL F15A MHS	2001	2006	REC63V-45551-00	REC6E7-45560-00	REC6E7-45570-00	REC682-45631-00	REC648-45633-00	REC683-45611-00	REC63V-45501-01 S 17,3" REC63V-45501-11 L 22,3"	REC683-45361-02-4D
20C	1985	1985	REC689-45551-00	REC689-45560-00	REC689-45571-00-00	REC664-45631-00	REC648-45633-00	REC689-45611-00	REC689-45501-10 L	
20C	1986	1993	REC63V-45551-00	REC689-45560-00	REC689-45571-00-00	REC664-45631-00	REC648-45633-00	REC689-45611-00	REC689-45501-10 L	
20C M	1990	1997	REC63V-45551-00	REC689-45560-00	REC689-45571-00-00	REC664-45631-00	REC648-45633-00	REC689-45611-00	REC689-45501-10 L	
20C MH	1998	1998	REC63V-45551-00	REC689-45560-00	REC689-45571-00-00	REC664-45631-00	REC648-45633-00	REC689-45611-00	REC689-45501-10 L	
20C MHL	2001	2002	REC63V-45551-00	REC689-45560-00	REC689-45571-00-00	REC664-45631-00	REC648-45633-00	REC689-45611-00	REC689-45501-10 L	
20C MHS	2001	2002	REC63V-45551-00	REC689-45560-00	REC689-45571-00-00	REC664-45631-00	REC648-45633-00	REC689-45611-00		
20D	1988	1998					REC648-45633-00	REC6L2-45611-00		
20D MHOL 20D MHOS	2001	2006					REC648-45633-00	REC6L2-45611-00		
20D WOL 20D WOS	2001	>					REC648-45633-00	REC6L2-45611-00		
F20A	1998	1999	REC61N-45551-00	REC61N-45560-00	REC61N-45570-00	REC664-45631-00	REC648-45633-00	REC6L2-45611-00	REC61N-45510-10 L 21,6"	PAF25-04070000
F20A E F20A EH	2000	2000	REC61N-45551-00	REC61N-45560-00	REC61N-45570-00	REC664-45631-00	REC648-45633-00	REC6L2-45611-00	REC61N-45510-00 S 16.6"	PAF25-04070000
F20A EH	2000	2000	REC61N-45551-00	REC61N-45560-00	REC61N-45570-00	REC664-45631-00	REC648-45633-00	REC6L2-45611-00	REC61N-45510-00 S 16.6"	PAF25-04070000
F20A EL	2001	2001	REC61N-45551-00	REC61N-45560-00	REC61N-45570-00	REC664-45631-00	REC648-45633-00	REC6L2-45611-00	REC61N-45510-10 L 21,6"	PAF25-04070000
F20A ES	2006	2006	REC61N-45551-00	REC61N-45560-00	REC61N-45570-00	REC664-45631-00	REC648-45633-00	REC6L2-45611-00	REC61N-45510-10 L 21,6"	PAF25-04070000
F20A ET	2000	2000	REC61N-45551-00	REC61N-45560-00	REC61N-45570-00	REC664-45631-00	REC648-45633-00	REC6L2-45611-00	REC61N-45510-00 S 16.6"	PAF25-04070000
F20A ETL	2006	2006	REC61N-45551-00	REC61N-45560-00	REC61N-45570-00	REC664-45631-00	REC648-45633-00	REC6L2-45611-00	REC61N-45510-10 L 21,6"	PAF25-04070000
F20A MH	2000	2000	REC61N-45551-00	REC61N-45560-00	REC61N-45570-00	REC664-45631-00	REC648-45633-00	REC6L2-45611-00	REC61N-45510-00 S 16.6"	PAF25-04070000
F20A MHL	2000	2000	REC61N-45551-00	REC61N-45560-00	REC61N-45570-00	REC664-45631-00	REC648-45633-00	REC6L2-45611-00	REC61N-45510-10 L 21,6"	PAF25-04070000
F20A MHS	2001	2001	REC61N-45551-00	REC61N-45560-00	REC61N-45570-00	REC664-45631-00	REC648-45633-00	REC6L2-45611-00	REC61N-45510-10 L 21,6"	PAF25-04070000
25B	1994	1995	REC6K5-45551-00	REC6K5-45560-00		REC664-45631-00	REC648-45633-00	REC697-45611-00		REC688-45331-00-94
25B MHL	2001	2006	REC61N-45551-00	REC61N-45560-00	REC61N-45570-00	REC664-45631-00	REC648-45633-00	REC6L2-45611-00	REC61N-45510-10 L 21,6"	PAF25-04070000
25B MHS	2001	2006	REC61N-45551-00	REC61N-45560-00	REC61N-45570-00	REC664-45631-00	REC648-45633-00	REC6L2-45611-00	REC61N-45510-00 S 16.6"	PAF25-04070000
25B WCS	2001	2002	REC61N-45551-00	REC61N-45560-00	REC61N-45570-00	REC664-45631-00	REC648-45633-00	REC6L2-45611-00	REC61N-45510-10 L 21,6"	PAF25-04070000
25D	1985	1987	REC689-45551-00	REC689-45560-00	REC689-45571-00-00	REC664-45631-00	REC648-45633-00	REC689-45611-00		PAF25-04070000
25D M	1990	1997	REC689-45551-00	REC689-45560-00	REC689-45571-00-00	REC664-45631-00	REC648-45633-00	REC689-45611-00		PAF25-04070000
25D MH	1998	1998	REC689-45551-00	REC689-45560-00	REC689-45571-00-00	REC664-45631-00	REC648-45633-00		REC689-45501-10 L	PAF25-04070000
25D MHL 25D MHS	2001	2001	REC689-45551-00	REC689-45560-00	REC689-45571-00-00	REC664-45631-00	REC648-45633-00			PAF25-04070000
25J	1987	1991					REC648-45633-00			PAF25-04070000
25J	1992	2000					REC648-45633-00			PAF25-04070000

MODELO MODEL MODELLO	DESDE FROM DELL' ANNO	HASTA TO ALL' ANNO	PIÑÓN ATAQUE GEAR PIGNONE INNEST0	PIÑÓN AVANTE GEAR FORWARD PIGNONE MARCIA AVANTI	PIÑÓN M. ATRÁS GEAR REVERSE PIGNONE MAR. INDIETRO	PIÑÓN M. ATRÁS GEAR REVERSE PIGNONE MAR. INDIETRO	MUELLE SPRING MOLLA	EJE HÉLICE PROPELLER SHAFT ASSE ELICA	EJE VERTICAL DRIVESHAFT ASSEMBLY ASSE VERT.	DIÁBOLO CARRIER COP. CASSA INGRANAGGI
25N	1988	1998					REC648-45633-00	REC6L2-45611-00		PAF25-04070000
25N MHOL 25N MHOS	2001	2006					REC648-45633-00	REC6L2-45611-00		PAF25-04070000
25N WOL 25N WOS	2001	2003					REC648-45633-00	REC6L2-45611-00		PAF25-04070000
25Q	1988	1994	REC6H4-45551-00	REC6H4-45560-00	REC6H4-45570-00	REC663-45631-00	REC648-45633-00	REC679-45611-00		PAF25-04070000
25V	1996	1996	REC61N-45551-00	REC61N-45560-00	REC61N-45570-00	REC664-45631-00	REC648-45633-00	REC6L2-45611-00	REC61N-45510-10 L 21,6"	PAF25-04070000
25V	1996	1998	REC61N-45551-00	REC61N-45560-00	REC61N-45570-00	REC664-45631-00	REC648-45633-00	REC6L2-45611-00	REC61N-45510-10 L 21,6"	PAF25-04070000
25V MHL 25V MHS	2001	2001	REC61N-45551-00	REC61N-45560-00	REC61N-45570-00	REC664-45631-00	REC648-45633-00	REC6L2-45611-00	REC61N-45510-10 L 21,6"	PAF25-04070000
25V WCS	2001	2001	REC61N-45551-00	REC61N-45560-00	REC61N-45570-00	REC664-45631-00	REC648-45633-00	REC6L2-45611-00	REC61N-45510-10 L 21,6"	PAF25-04070000
F25A E F25A EH	2000	2000	REC61N-45551-00	REC61N-45560-00	REC61N-45570-00	REC664-45631-00	REC648-45633-00	REC6L2-45611-00	REC61N-45510-10 L 21,6"	PAF25-04070000
F25A EHL	2001	2002	REC61N-45551-00	REC61N-45560-00	REC61N-45570-00	REC664-45631-00	REC648-45633-00	REC6L2-45611-00	REC61N-45510-10 L 21,6"	PAF25-04070000
F25A EHS	2001	2001	REC61N-45551-00	REC61N-45560-00	REC61N-45570-00	REC664-45631-00	REC648-45633-00	REC6L2-45611-00	REC61N-45510-00 S 16.6"	PAF25-04070000
F25A EL F25A ES	2001	2006	REC61N-45551-00	REC61N-45560-00	REC61N-45570-00	REC664-45631-00	REC648-45633-00	REC6L2-45611-00	REC61N-45510-10 L 21,6"	PAF25-04070000
F25A ET	2000	2000	REC61N-45551-00	REC61N-45560-00	REC61N-45570-00	REC664-45631-00	REC648-45633-00	REC6L2-45611-00	REC61N-45510-00 S 16.6"	PAF25-04070000
F25A ETL	2001	2006	REC61N-45551-00	REC61N-45560-00	REC61N-45570-00	REC664-45631-00	REC648-45633-00	REC6L2-45611-00	REC61N-45510-10 L 21,6"	PAF25-04070000
F25A MH	2000	2000	REC61N-45551-00	REC61N-45560-00	REC61N-45570-00	REC664-45631-00	REC648-45633-00	REC6L2-45611-00	REC61N-45510-10 L 21,6"	PAF25-04070000
F25A MHL F25A MHS	2001	2006	REC61N-45551-00	REC61N-45560-00	REC61N-45570-00	REC664-45631-00	REC648-45633-00	REC6L2-45611-00	REC61N-45510-10 L 21,6"	PAF25-04070000
FT25B ED	2000	2000						REC66T-45611-00		REC63D-45361-02-4D
FT25B EDL FT25B EDX	2001	2002						REC66T-45611-00		REC63D-45361-02-4D
FT25B ET	2000	2000						REC66T-45611-00		REC63D-45361-02-4D
FT25B ETL	2001	2006						REC66T-45611-00		REC63D-45361-02-4D
FT25B ETX	2001	2002						REC66T-45611-00		REC63D-45361-02-4D
30A	1985	1985	REC689-45551-00	REC689-45560-00	REC689-45571-00-00	REC664-45631-00	REC648-45633-00	REC689-45611-00		
30A M	1990	1992	REC689-45551-00	REC689-45560-00	REC689-45571-00-00	REC664-45631-00	REC648-45633-00	REC689-45611-00	REC689-45501-10	
30D	1986	2000					REC648-45633-00			
30D EOL 30D EOS 30D ETOL 30D MHOL 30D MHOS	2001	2006					REC648-45633-00			
30D OL	2001	2003					REC648-45633-00			
30D EOS	2001	2006					REC648-45633-00			
30G	1996	1996	REC61N-45551-00	REC61N-45560-00	REC61N-45570-00	REC664-45631-00	REC648-45633-00	REC6L2-45611-00	REC61N-45510-00 S 16,6"	PAF25-04070000
30G	1996	1998	REC61N-45551-00	REC61N-45560-00	REC61N-45570-00	REC664-45631-00	REC648-45633-00	REC6L2-45611-00	REC61N-45510-00 S 16,6"	PAF25-04070000
30G MHS 30G WCS	2001	2001	REC61N-45551-00	REC61N-45560-00	REC61N-45570-00		REC648-45633-00	REC6L2-45611-00	REC61N-45510-00 S 16,6"	PAF25-04070000
30H MHS	2001	2002	REC61N-45551-00	REC61N-45560-00	REC61N-45570-00	REC664-45631-00	REC648-45633-00	REC6L2-45611-00	REC61N-45510-00 S 16,6"	PAF25-04070000
30H WCS	2001	2002	REC61N-45551-00	REC61N-45560-00	REC61N-45570-00	REC664-45631-00	REC648-45633-00	REC6L2-45611-00	REC61N-45510-10 L 21,6"	PAF25-04070000
F30A ETL	2001	2006	REC66T-45551-00	REC66T-45560-00	REC66T-45571-00	REC66T-45631-00		REC66T-45611-00	REC67C-45501-10 L 21"	REC63D-45361-02-4D
F30A ETS	2001	2006	REC66T-45551-00	REC66T-45560-00	REC66T-45571-00	REC66T-45631-00		REC66T-45611-00	REC67C-45501-00 S 16,1"	REC63D-45361-02-4D
F30A MHDL	2001	2006	REC66T-45551-00	REC66T-45560-00	REC66T-45571-00	REC66T-45631-00		REC66T-45611-00	REC67C-45501-10 L 21"	REC63D-45361-02-4D
F30A MHDS	2001	2006	REC66T-45551-00	REC66T-45560-00	REC66T-45571-00	REC66T-45631-00		REC66T-45611-00	REC67C-45501-00 S 16,1"	REC63D-45361-02-4D
E40G WH	2003	2003	REC6F5-45551-00	REC6F5-45560-00	REC6F5-45570-00	REC663-45631-00	REC663-45633-00	REC6F6-45611-00	REC676-45501-10 L	REC63D-45361-02-4D
40H	1985	1990	REC6H4-45551-00	REC6H4-45560-00	REC6H4-45570-00	REC6H4-45631-00	REC663-45633-00	REC679-45611-00		
40H	1991	1993	REC6H4-45551-00	REC6H4-45560-00	REC6H4-45570-00	REC6H4-45631-00	REC663-45633-00	REC679-45611-00		
40Q	1993	1998	REC6H9-45551-00	REC679-45560-00	REC679-45571-00-00	REC663-45631-00	REC663-45633-00	REC679-45611-00	REC679-45501-10 L	
40Q E	1992	1992	REC6H9-45551-00	REC679-45560-00	REC679-45571-00-00	REC663-45631-00	REC663-45633-00	REC679-45611-00	REC679-45501-10 L	
40Q M	1990	1992	REC6H9-45551-00	REC679-45560-00	REC679-45571-00-00	REC663-45631-00	REC663-45633-00	REC679-45611-00	REC679-45501-10 L	
40R MHO	2000	2000	REC6H4-45551-00	REC6H4-45560-00	REC6H4-45570-00		REC663-45633-00			REC63D-45361-02-4D
40R ROS	2001	2001	REC6H4-45551-00	REC6H4-45560-00	REC6H4-45570-00		REC663-45633-00			REC63D-45361-02-4D
40V	1995	1998	REC6H4-45551-00	REC6H4-45560-00	REC6H4-45570-00		REC663-45633-00			REC63D-45361-02-4D
40V EO	2000	2000	REC6H4-45551-00	REC6H4-45560-00	REC6H4-45570-00		REC663-45633-00			REC63D-45361-02-4D
40V EOL 40V EOS	2001	2006	REC6H4-45551-00	REC6H4-45560-00	REC6H4-45570-00		REC663-45633-00			REC63D-45361-02-4D
40V ETO	2000	2000	REC6H4-45551-00	REC6H4-45560-00	REC6H4-45570-00		REC663-45633-00			REC63D-45361-02-4D
40V ETOL 40V ETOS	2001	2003	REC6H4-45551-00	REC6H4-45560-00	REC6H4-45570-00		REC663-45633-00			REC63D-45361-02-4D
40V MHOL 40V MHOS	2001	2006	REC6H4-45551-00	REC6H4-45560-00	REC6H4-45570-00		REC663-45633-00			REC63D-45361-02-4D

MODELO MODEL MODELLO	DESDE FROM DELL' ANNO	HASTA TO ALL' ANNO	PIÑÓN ATAQUE GEAR PIGNONE INNEST0	PIÑÓN AVANTE GEAR FORWARD PIGNONE MARCIA AVANTI	PIÑÓN M. ATRÁS GEAR REVERSE PIGNONE MAR. INDIETRO	PIÑÓN M. ATRÁS GEAR REVERSE PIGNONE MAR. INDIETRO	MUELLE SPRING MOLLA	EJE HÉLICE PROPELLER SHAFT ASSE ELICA	EJE VERTICAL DRIVESHAFT ASSEMBLY ASSE VERT.	DIÁBOLO CARRIER COP. CASSA INGRANAGGI
40V MO	2000	2000	REC6H4-45551-00	REC6H4-45560-00	REC6H4-45570-00		REC663-45633-00			REC63D-45361-02-4D
40X	1998	1998	REC66T-45551-00	REC66T-45560-00	REC66T-45571-00	REC66T-45631-00	REC663-45633-00	REC66T-45611-00	REC66T-45501-10	REC63D-45361-02-4D
40X MH	2000	2000	REC66T-45551-00	REC66T-45560-00	REC66T-45571-00	REC66T-45631-00	REC663-45633-00	REC66T-45611-00	REC66T-45501-10	REC63D-45361-02-4D
40X MHL	2001	2006	REC66T-45551-00	REC66T-45560-00	REC66T-45571-00	REC66T-45631-00	REC663-45633-00	REC66T-45611-00	REC68T-45501-10	REC63D-45361-02-4D
40X MHS	2001	2002	REC66T-45551-00	REC66T-45560-00	REC66T-45571-00	REC66T-45631-00	REC663-45633-00	REC66T-45611-00	REC68T-45501-00	REC63D-45361-02-4D
40X W	2000	2000	REC66T-45551-00	REC66T-45560-00	REC66T-45571-00	REC66T-45631-00	REC663-45633-00	REC66T-45611-00	REC66T-45501-10	REC63D-45361-02-4D
40X WL 40X WS	2001	2001	REC66T-45551-00	REC66T-45560-00	REC66T-45571-00	REC66T-45631-00	REC663-45633-00	REC66T-45611-00	REC66T-45501-00	REC63D-45361-02-4D
40X WT	2000	2000	REC66T-45551-00	REC66T-45560-00	REC66T-45571-00	REC66T-45631-00	REC663-45633-00	REC66T-45611-00	REC66T-45501-10	REC63D-45361-02-4D
40X WTL	2001	2003	REC66T-45551-00	REC66T-45560-00	REC66T-45571-00	REC66T-45631-00	REC663-45633-00	REC66T-45611-00	REC66T-45501-10	REC63D-45361-02-4D
40Y ETOL 40Y MHOS	2001	2006	REC6H4-45551-00	REC6H4-45560-00	REC6H4-45570-00		REC663-45633-00			REC63D-45361-02-4D
E40G MH	2003	2003	REC6F5-45551-00	REC6F5-45560-00	REC6F5-45570-00	REC663-45631-00	REC663-45633-00	REC6F6-45611-00	REC676-45501-10 L	REC676-45361-00
E40G MHL	2003	2003	REC6F5-45551-00	REC6F5-45560-00	REC6F5-45570-00	REC663-45631-00	REC663-45633-00	REC6F6-45611-00		REC676-45361-00
E40G MHS	2003	2003	REC6F5-45551-00	REC6F5-45560-00	REC6F5-45570-00	REC663-45631-00	REC663-45633-00	REC6F6-45611-00	REC676-45501-10 L	REC676-45361-00
F40A	1999	1999	REC6H4-45551-00	REC6H4-45560-00	REC6H4-45570-00		REC663-45633-00		REC67C-45501-00 S 16,1"	REC63D-45361-02-4D
F40A ED	1999	1999	REC6K5-45551-00	REC6K5-45560-00	REC6K5-45570-00		REC688-45633-00		REC67C-45501-00 S 16,1"	REC63D-45361-02-4D
F40A EDL	2001	2001	REC6H4-45551-00	REC6H4-45560-00	REC6H4-45570-00		REC688-45633-00		REC67C-45501-10 L 21"	REC63D-45361-02-4D
F40A ET	1999	1999	REC6K5-45551-00	REC6K5-45560-00	REC6K5-45570-00	REC688-45631-00	REC688-45633-00	REC688-45611-00		REC688-45331-00-94
F40A ETL	2001	2002	REC6H4-45551-00	REC6H4-45560-00	REC6H4-45570-00		REC688-45633-00			REC63D-45361-02-4D
F40A ED	1999	1999	REC6H4-45551-00	REC6H4-45560-00	REC6H4-45570-00	REC688-45631-00	REC663-45633-00	REC688-45611-00		REC688-45331-00-94
F40B ED	2000	2001	REC66T-45551-00	REC66T-45560-00	REC66T-45571-00	REC66T-45631-00		REC66T-45611-00	REC67C-45501-00 S 16,1"	REC63D-45361-02-4D
F40B EDL	2001	2006	REC66T-45551-00	REC66T-45560-00	REC66T-45571-00	REC66T-45631-00		REC66T-45611-00	REC67C-45501-10 L 21"	REC63D-45361-02-4D
F40B EDS	2001	2002	REC66T-45551-00	REC66T-45560-00	REC66T-45571-00	REC66T-45631-00		REC66T-45611-00	REC67C-45501-00 S 16,1"	REC63D-45361-02-4D
F40B ET	2000	2001	REC66T-45551-00	REC66T-45560-00	REC66T-45571-00	REC66T-45631-00		REC66T-45611-00	REC67C-45501-10 L 21"	REC63D-45361-02-4D
E40B ETL	2001	2006	REC66T-45551-00	REC66T-45560-00	REC66T-45571-00	REC66T-45631-00		REC66T-45611-00	REC67C-45501-10 L 21"	REC63D-45361-02-4D
F40B ETS	2001	2006	REC66T-45551-00	REC66T-45560-00	REC66T-45571-00	REC66T-45631-00		REC66T-45611-00	REC67C-45501-00 S 16,1"	REC63D-45361-02-4D
F40B MHD	2000	2000	REC66T-45551-00	REC66T-45560-00	REC66T-45571-00	REC66T-45631-00		REC66T-45611-00	REC67C-45501-00 S 16,1"	REC63D-45361-02-4D
F40B MHDL	2001	2006	REC66T-45551-00	REC66T-45560-00	REC66T-45571-00	REC66T-45631-00		REC66T-45611-00	REC67C-45501-10 L 21"	REC63D-45361-02-4D
F40B MHDS	2001	2006	REC66T-45551-00	REC66T-45560-00	REC66T-45571-00	REC66T-45631-00		REC66T-45611-00	REC67C-45501-00 S 16,1"	REC63D-45361-02-4D
F45A	1996	1999	REC6K5-45551-00	REC6K5-45560-00	REC6K5-45570-00	REC688-45631-00	REC688-45633-00	REC688-45611-00		REC688-45331-00-94
F45A ED F45A ET	2000	2000	REC6K5-45551-00	REC6K5-45560-00	REC6K5-45570-00	REC688-45631-00	REC688-45633-00	REC688-45611-00		REC688-45331-00-94
50D	1984	1990	REC6H4-45551-00	REC6H4-45560-00	REC6H4-45570-00	REC6H4-45631-00	REC663-45633-00	REC679-45611-00		
50D	1991	1993	REC6H4-45551-00	REC6H4-45560-00	REC663-45631-00	REC6H4-45631-00	REC663-45633-00	REC679-45611-00		
50G	1993	1998	REC6K5-45551-00	REC6K5-45560-00		REC663-45631-00	REC688-45633-00	REC697-45611-00		REC688-45331-00-94
50G ETO	2000	2000	REC6K5-45551-00	REC6K5-45560-00		REC663-45631-00	REC688-45633-00	REC697-45611-00		REC688-45331-00-94
50G ETOL	2001	2006	REC6K5-45551-00	REC6K5-45560-00		REC663-45631-00	REC688-45633-00	REC697-45611-00		REC688-45331-00-94
50H	1995	1998	REC6H4-45551-00	REC6H4-45560-00	REC6H4-45570-00		REC663-45633-00			REC63D-45361-02-4D
50H EDO	2000	2000	REC6H4-45551-00	REC6H4-45560-00	REC6H4-45570-00		REC663-45633-00			REC63D-45361-02-4D
50H EDOL 50H EDOS	2001	2002	REC6H4-45551-00	REC6H4-45560-00	REC6H4-45570-00		REC663-45633-00			REC63D-45361-02-4D
50H MDO 50H MO	2000	2000	REC6H4-45551-00	REC6H4-45560-00	REC6H4-45570-00		REC663-45633-00			REC63D-45361-02-4D
F50A	1995	1995	REC6H4-45551-00	REC6H4-45560-00	REC6H4-45570-00		REC663-45633-00			REC63D-45361-02-4D
F50A ED	2000	2000	REC6K5-45551-00	REC6K5-45560-00	REC6K5-45570-00		REC663-45633-00	REC688-45611-00		
F50A EDL	2001	2006	REC6H4-45551-00	REC6H4-45560-00			REC688-45633-00			REC63D-45361-02-4D
F50A ET	2000	2000	REC6K5-45551-00	REC6K5-45560-00	REC6K5-45570-00		REC663-45633-00	REC688-45611-00		
F50A ETL	2001	2006	REC6H4-45551-00	REC6H4-45560-00			REC688-45633-00			REC63D-45361-02-4D
F50B	1996	1997	REC6K5-45551-00	REC6K5-45560-00	REC6K5-45570-00	REC688-45631-00	REC688-45633-00			
F50B	1998	1999	REC6K5-45551-00	REC6K5-45560-00	REC6K5-45570-00					REC688-45331-00-94
F50B ET	2000	2000	REC6K5-45551-00	REC6K5-45560-00	REC6K5-45570-00	REC688-45631-00	REC663-45633-00	REC688-45611-00		REC688-45331-00-94
FT50B	1998	1999	REC6K5-45551-00	REC6K5-45560-00	REC6K5-45570-00	REC688-45631-00	REC688-45633-00	REC688-45611-00		REC688-45331-00-94
FT50B ETL	2001	2002					REC688-45633-00			REC63D-45361-02-4D
FT50C ETL	2002	2006		REC67F-45560-00			REC688-45633-00			
FT50G ETL	2005	2006	REC6K5-45551-00	REC6K5-45560-00			REC688-45633-00			
55B	1993	1998	REC697-45551-00	REC697-45560-00	REC697-45571-00-00	REC663-45631-00	REC663-45633-00	REC697-45611-00	REC663-45510-01 S	REC663-45331-00-94
55B E	1990	1991	REC697-45551-00	REC697-45560-00	REC697-45571-00-00	REC663-45631-00	REC663-45633-00	REC697-45611-00	REC663-45510-01 S	REC663-45331-00-94
55B E	1992	1992	REC697-45551-00	REC697-45560-00	REC697-45571-00-00	REC663-45631-00	REC663-45633-00	REC697-45611-00	REC663-45510-01 S	REC663-45331-00-94
55B EHD 55B ET	2000	2000	REC697-45551-00	REC697-45560-00	REC697-45571-00-00	REC663-45631-00	REC663-45633-00	REC697-45611-00	REC663-45510-01 S	
55B ETL	2001	2002	REC697-45551-00	REC697-45560-00	REC697-45571-00-00	REC663-45631-00	REC663-45633-00	REC697-45611-00		REC663-45331-00-94
60F	1984	1998	REC6K5-45551-00	REC6K5-45560-00		REC663-45631-00	REC688-45633-00	REC697-45611-00		REC688-45331-00-94
60F EO 60F ETO	2000	2000	REC6K5-45551-00	REC6K5-45560-00		REC663-45631-00	REC688-45633-00	REC697-45611-00		REC688-45331-00-94

MODELO MODEL MODELLO	DESDE FROM DELL' ANNO	HASTA TO ALL' ANNO	PIÑÓN ATAQUE GEAR PIGNONE INNEST0	PIÑÓN AVANTE GEAR FORWARD PIGNONE MARCIA AVANTI	PIÑÓN M. ATRÁS GEAR REVERSE PIGNONE MAR. INDIETRO	PIÑÓN M. ATRÁS GEAR REVERSE PIGNONE MAR. INDIETRO	MUELLE SPRING MOLLA	EJE HÉLICE PROPELLER SHAFT ASSE ELICA	EJE VERTICAL DRIVESHAFT ASSEMBLY ASSE VERT.	DIÁBOLO CARRIER COP. CASSA INGRANAGGI
60F ETOL	2001	2006	REC6K5-45551-00	REC6K5-45560-00		REC663-45631-00	REC688-45633-00	REC697-45611-00		REC688-45331-00-94
E60H MHDL	2001	2006	REC6K5-45551-00	REC6K5-45560-00		REC6H1-45631-00	REC688-45633-00	REC6H1-45611-00	REC69D-45501-10 L 22,5"	REC688-45331-00-94
FT60B ETL	2003	2006	REC6K5-45551-00	REC6K5-45560-00			REC688-45633-00			
FT60D ETL	2005	2006	REC6K5-45551-00	REC6K5-45560-00			REC688-45633-00			
70B	1984	1998	REC6K5-45551-00	REC6K5-45560-00		REC663-45631-00	REC688-45633-00	REC697-45611-00		REC688-45331-00-94
70B EDOL	2001	2001	REC6K5-45551-00	REC6K5-45560-00			REC688-45633-00	REC697-45611-00		REC688-45331-00-94
70B EO 70B ETO	2000	2000	REC6K5-45551-00	REC6K5-45560-00		REC663-45631-00	REC688-45633-00	REC697-45611-00		REC688-45331-00-94
70B ETOL	2001	2006	REC6K5-45551-00	REC6K5-45560-00		REC663-45631-00	REC688-45633-00	REC697-45611-00		REC688-45331-00-94
75A	1990	1998	REC688-45551-00	REC688-45560-00	REC688-45571-00-00	REC688-45631-00	REC688-45633-00	REC688-45611-00	REC688-45501-11 L 20.3"	REC688-45331-00-94
75A E	1990	2000	REC688-45551-00	REC688-45560-00	REC688-45571-00-00	REC688-45631-00	REC688-45633-00	REC688-45611-00	REC688-45501-10 S	REC688-45331-00-94
75A EDL	2001	2006	REC688-45551-00	REC688-45560-00	REC688-45571-00-00	REC688-45631-00	REC688-45633-00	REC688-45611-00	REC688-45501-10 S	REC688-45331-00-94
75A EM	1992	1993	REC688-45551-00	REC688-45560-00	REC688-45571-00-00	REC688-45631-00	REC688-45633-00	REC688-45611-00	REC688-45501-11 L 20.3"	REC688-45331-00-94
75A ET	2000	2000	REC688-45551-00	REC688-45560-00	REC688-45571-00-00	REC688-45631-00	REC688-45633-00	REC688-45611-00	REC688-45501-11 L 20.3"	REC688-45331-00-94
75A ETL	2001	2002	REC688-45551-00	REC688-45560-00	REC688-45571-00-00	REC688-45631-00	REC688-45633-00	REC688-45611-00	REC688-45501-11 L 20.3"	REC688-45331-00-94
75A MHD	2000	2000	REC688-45551-00	REC688-45560-00	REC688-45571-00-00	REC688-45631-00	REC688-45633-00	REC688-45611-00	REC688-45501-11 L 20.3"	REC688-45331-00-94
75C ETO	2000	2000	REC688-45551-00	REC688-45560-00	REC688-45571-00-00		REC688-45633-00	REC6H1-45611-00		REC688-45331-00-94
75C ETOL	2001	2006	REC688-45551-00	REC688-45560-00	REC688-45571-00-00		REC688-45633-00	REC6H1-45611-00		REC688-45331-00-94
80A	1985	1996	REC688-45551-00	REC688-45560-00	REC688-45571-00-00	REC6H1-45631-00	REC688-45633-00	REC6H1-45611-00		REC688-45331-00-94
F80A	1999	1999		REC67F-45560-00	REC67F-45570-00		REC688-45633-00		REC67F-45501-10 L 21.1"	
F80A ET	2000	2000		REC67F-45560-00	REC67F-45570-00		REC688-45633-00		REC67F-45501-10 L 21.1"	
F80A ETL	2001	2006		REC67F-45560-00	REC67F-45570-00		REC688-45633-00	REC67F-45611-01	REC67F-45501-10 L 21.1"	
F80A ETX	2001	2001		REC67F-45560-00	REC67F-45570-00		REC688-45633-00	REC67F-45611-01	REC67F-45501-10 L 21.1"	
F80B ETL	2005	2006		REC67F-45560-00	REC67F-45570-00		REC688-45633-00	REC67F-45611-01	REC67F-45501-10 L 21.1"	
85A	1996	1998	REC688-45551-00	REC688-45560-00	REC688-45571-00	REC688-45631-00	REC688-45633-00	REC688-45611-00	REC688-45501-10 S	REC688-45331-00-94
85A E	1990	2000	REC688-45551-00	REC688-45560-00	REC688-45571-00	REC688-45631-00	REC688-45633-00	REC688-45611-00	REC688-45501-10 S	REC688-45331-00-94
85A ET	2000	2000	REC688-45551-00	REC688-45560-00	REC688-45571-00	REC688-45631-00	REC688-45633-00	REC688-45611-00	REC688-45501-10 S	REC688-45331-00-94
85A ETL	2001	2002	REC688-45551-00	REC688-45560-00	REC688-45571-00	REC688-45631-00	REC688-45633-00	REC688-45611-00	REC688-45501-11 L 20.3"	REC688-45331-00-94
90A	1984	1998	REC688-45551-00	REC688-45560-00	REC688-45571-00	REC6H1-45631-01	REC688-45633-00	REC6H1-45611-00		REC688-45331-00-94
90A ETO	2000	2000	REC688-45551-00	REC688-45560-00	REC688-45571-00	REC6H1-45631-01	REC688-45633-00	REC6H1-45611-00		REC688-45331-00-94
90A ETOL	2001	2006	REC688-45551-00	REC688-45560-00	REC688-45571-00	REC6H1-45631-01	REC688-45633-00	REC6H1-45611-00		REC688-45331-00-94
100A	1998	1998	REC6E5-45551-00	REC6E5-45560-00	REC6E5-45571-00	REC6E5-45631-00	REC6E5-45633-01	REC6E5-45611-00	REC6E5-45501-01 L 20.3"	REC6E5-45331-00-94
100A ETO	2000	2000	REC6E5-45551-00	REC6E5-45560-00	REC6E5-45571-00	REC6E5-45631-00	REC6E5-45633-01	REC6E5-45611-00	REC6E5-45501-01 L 20.3"	REC6E5-45331-00-94
100A ETOL	2001	2001	REC6E5-45551-00	REC6E5-45560-00	REC6E5-45571-00	REC6E5-45631-00	REC6E5-45633-01	REC6E5-45611-00		REC6E5-45331-00-94
F100A	1999	1999		REC67F-45560-00	REC67F-45570-00		REC688-45633-00	REC67F-45611-01	REC67F-45501-10 L 21.1"	
F100A ET	2000	2000		REC67F-45560-00	REC67F-45570-00		REC688-45633-00	REC67F-45611-01	REC67F-45501-10 L 21.1"	
F100A ETL	2001	2006		REC67F-45560-00	REC67F-45570-00		REC688-45633-00	REC67F-45611-01		
F100A ETX	2001	2001		REC67F-45560-00	REC67F-45570-00		REC688-45633-00	REC67F-45611-01		
F100B ETX	2005	2006					REC6E5-45633-01	REC6E5-45611-00		REC6E5-45331-00-94
F100D ETL	2005	2006					REC688-45633-00			
115A	1984	1987	REC6E5-45551-00	REC6E5-45560-00	REC6E5-45571-00	REC6E5-45631-00	REC6E5-45633-01	REC6E5-45611-00	REC6E5-45501-01 L 20.3"	REC6E5-45331-00-94
115B	1988	1995	REC6E5-45551-00	REC6E5-45560-00	REC6E5-45571-00	REC6E5-45631-00	REC6E5-45633-01	REC6E5-45611-00	REC6E5-45501-01 L 20.3"	REC6E5-45331-00-94
115B	1996	1996	REC6E5-45551-00	REC6E5-45560-00	REC6E5-45571-00	REC6E5-45631-00	REC6E5-45633-01	REC6E5-45611-00	REC6E5-45501-01 L 20.3"	REC6E5-45331-00-94
155B ETO	1997	1998	REC6E5-45551-00	REC6E5-45560-00	REC6E5-45571-00	REC6E5-45631-00	REC6E5-45633-01	REC6E5-45611-00		REC6E5-45331-00-94
115B ETO	1999	2000	REC6E5-45551-00	REC6E5-45560-00	REC6E5-45571-00	REC6E5-45631-00	REC6E5-45633-01	REC6E5-45611-00	REC6E5-45501-01 L 20.3"	REC6E5-45331-00-94
115B ETOL	2001	2002	REC6E5-45551-00	REC6E5-45560-00	REC6E5-45571-00	REC6E5-45631-00	REC6E5-45633-01	REC6E5-45611-00		REC6E5-45331-00-94
115C	1990	1995	REC6E5-45551-00	REC6E5-45560-00	REC6E5-45571-00	REC6E5-45631-00	REC6E5-45633-01	REC6E5-45611-00	REC6E5-45501-01 L 20.3"	REC6E5-45331-00-94
115C	1995	1998	REC6E5-45551-00	REC6E5-45560-00	REC6E5-45571-00	REC6E5-45631-00	REC6E5-45633-01	REC6E5-45611-00	REC6E5-45501-01 L 20.3"	
115C ETO	2000	2000	REC6E5-45551-00	REC6E5-45560-00	REC6E5-45571-00	REC6E5-45631-00	REC6E5-45633-01	REC6E5-45611-00		REC6E5-45331-00-94
115C ETOL	2001	2006	REC6E5-45551-00	REC6E5-45560-00	REC6E5-45571-00	REC6E5-45631-00	REC6E5-45633-01	REC6E5-45611-00		REC6E5-45331-00-94
115C ETOX	2001	2002	REC6E5-45551-00	REC6E5-45560-00	REC6E5-45571-00	REC6E5-45631-00	REC6E5-45633-01	REC6E5-45611-00		REC6E5-45331-00-94
F115A ET	2000	2000					REC6E5-45633-01	REC6E5-45611-00		REC6E5-45331-00-94
F115A ETL F115A ETX	2001	2006					REC6E5-45633-01	REC6E5-45611-00		REC6E5-45331-00-94

MODELO MODEL MODELLO	DESDE FROM DELL' ANNO	HASTA TO ALL' ANNO	PIÑÓN ATAQUE GEAR PIGNONE INNEST0	PIÑÓN AVANTE GEAR FORWARD PIGNONE MARCIA AVANTI	PIÑÓN M. ATRÁS GEAR REVERSE PIGNONE MAR. INDIETRO	PIÑÓN M. ATRÁS GEAR REVERSE PIGNONE MAR. INDIETRO	MUELLE SPRING MOLLA	EJE HÉLICE PROPELLER SHAFT ASSE ELICA	EJE VERTICAL DRIVESHAFT ASSEMBLY ASSE VERT.	DIÁBOLO CARRIER COP. CASSA INGRANAGGI
FL115A ET	2000	2000					REC6E5-45633-01	REC6E5-45611-00		REC6E5-45331-00-94
FL115A ETX	2001	2006					REC6E5-45633-01	REC6E5-45611-00		REC6E5-45331-00-94
130B	1990	1994	REC6E5-45551-00	REC6E5-45560-00	REC6E5-45571-00	REC6E5-45631-00	REC6E5-45633-01	REC6E5-45611-00		REC6E5-45331-00-94
130B	1995	1999	REC6E5-45551-00	REC6E5-45560-00	REC6E5-45571-00	REC6E5-45631-00	REC6E5-45633-01	REC6E5-45611-00		REC6E5-45331-00-94
130B ETO	2000	2000	REC6E5-45551-00	REC6E5-45560-00	REC6E5-45571-00	REC6E5-45631-00	REC6E5-45633-01	REC6E5-45611-00	REC6E5-45501-01 L 20.3"	REC6E5-45331-00-94
130B ETOL	2001	2006	REC6E5-45551-00	REC6E5-45560-00	REC6E5-45571-00	REC6E5-45631-00	REC6E5-45633-01	REC6E5-45611-00		REC6E5-45331-00-94
130B ETOX	2001	2001	REC6E5-45551-00	REC6E5-45560-00	REC6E5-45571-00	REC6E5-45631-00	REC6E5-45633-01	REC6E5-45611-00		REC6E5-45331-00-94
L130B	1991	1994	REC6E5-45551-00	REC6E5-45560-00	REC6E5-45571-00	REC6E5-45631-00	REC6E5-45633-01	REC6E5-45611-00	REC6E5-45501-01 L 20.3"	REC6E5-45331-00-94
L130B	1995	1998	REC6E5-45551-00	REC6E5-45560-00	REC6E5-45571-00	REC6E5-45631-00	REC6E5-45633-01	REC6E5-45611-00	REC6E5-45501-01 L 20.3"	REC6E5-45331-00-94
L130B ETO	2000	2000	REC6E5-45551-00	REC6E5-45560-00	REC6E5-45571-00	REC6E5-45631-00	REC6E5-45633-01	REC6E5-45611-00	REC6E5-45501-01 L 20.3"	REC6E5-45331-00-94
L130B ETOX	2001	2001	REC6E5-45551-00	REC6E5-45560-00	REC6E5-45571-00	REC6E5-45631-00	REC6E5-45633-01			REC6E5-45331-00-94
140A	1984	1987	REC6E5-45551-00	REC6E5-45560-00	REC6E5-45571-00	REC6E5-45631-00	REC6E5-45633-01	REC6E5-45611-00	REC6E5-45501-01 L 20.3"	REC6E5-45331-00-94
140B	1988	1989	REC6E5-45551-00	REC6E5-45560-00	REC6E5-45571-00	REC6E5-45631-00	REC6E5-45633-01	REC6E5-45611-00		REC6E5-45331-00-94
L140B	1989	1989	REC6E5-45551-00	REC6E5-45560-00	REC6E5-45571-00	REC6E5-45631-00	REC6E5-45633-01			
150A	1984	1989	REC6G5-45551-00	REC6G5-45560-00	REC6G5-45570-00	REC6G5-45631-00	REC6E5-45633-01	REC6E5-45611-00		
150A ET	1998	2000	REC6G5-45551-00	REC6G5-45560-00	REC6G5-45570-00	REC6G5-45631-00	REC6E5-45633-01		REC6G5-45501-21 XL 25,3"	REC6J9-45332-00-CA
150A ETO	1986	1987	REC6G5-45551-00	REC6G5-45560-00	REC6G5-45570-00	REC6G5-45631-00	REC6E5-45633-01	REC6J9-45611-00		REC6J9-45332-00-CA
150A ETL 150A ETX	2001	2002	REC6G5-45551-00	REC6G5-45560-00	REC6G5-45570-00	REC6G5-45631-00	REC6E5-45633-01	REC6J9-45611-00	REC6G5-45501-21 XL 25,3"	REC6J9-45332-00-CA
150C	1990	1994	REC6G5-45551-00	REC6G5-45560-00	REC6G5-45570-00	REC6G5-45631-00	REC6E5-45633-01	REC6J9-45611-00	REC6G5-45501-21 XL 25,3"	REC6J9-45332-00-CA
150C	1995	1995	REC6G5-45551-00	REC6G5-45560-00	REC6G5-45570-00	REC6G5-45631-00	REC6E5-45633-01	REC6J9-45611-00	REC6G5-45501-21 XL 25,3"	REC6J9-45332-00-CA
150F	1996	1998	REC6G5-45551-00	REC6G5-45560-00	REC6G5-45570-00	REC6G5-45631-00	REC6E5-45633-01	REC6J9-45611-00	REC6G5-45501-21 XL 25,3"	REC6J9-45332-00-CA
150F	1997	1998	REC6G5-45551-00	REC6G5-45560-00	REC6G5-45570-00	REC6G5-45631-00	REC6E5-45633-01	REC6J9-45611-00	REC6G5-45501-21 XL 25,3"	REC6J9-45332-00-CA
150F ETO	2000	2000	REC6G5-45551-00	REC6G5-45560-00	REC6G5-45570-00	REC6G5-45631-00	REC6E5-45633-01	REC6J9-45611-00	REC6G5-45501-21 XL 25,3"	REC6J9-45332-00-CA
150F ETOL 150F ETOX	2001	2006	REC6G5-45551-00	REC6G5-45560-00	REC6G5-45570-00	REC6G5-45631-00	REC6E5-45633-01	REC6J9-45611-00	REC6G5-45501-21 XL 25,3"	REC6J9-45332-00-CA
F150A ETL F150A ETX FL150A ETL FL150A ETX	2004	2006					REC6E5-45633-01	REC6J9-45611-00		REC6J9-45332-00-CA
L150A L150A ETO	1988	1989	REC6G5-45551-00	REC6G5-45560-00	REC6G5-45570-00	REC6G5-45631-00	REC6E5-45633-01		REC6G5-45501-21 XL 25,3"	
L150C	1990	1994	REC6G5-45551-00	REC6G5-45560-00	REC6G5-45570-00	REC6G5-45631-00	REC6E5-45633-01	REC6J9-45611-00	REC6G5-45501-21 XL 25,3"	REC6J9-45332-00-CA
L150C	1995	1995	REC6G5-45551-00	REC6G5-45560-00	REC6G5-45570-00	REC6G5-45631-00	REC6E5-45633-01	REC6J9-45611-00	REC6G5-45501-21 XL 25,3"	REC6J9-45332-00-CA
L150F	1996	1998	REC6G5-45551-00	REC6G5-45560-00	REC6G5-45570-00	REC6G5-45631-00	REC6E5-45633-01	REC6J9-45611-00	REC6G5-45501-21 XL 25,3"	REC6J9-45332-00-CA
L150F ETO	2000	2001	REC6G5-45551-00	REC6G5-45560-00	REC6G5-45570-00	REC6G5-45631-00	REC6E5-45633-01	REC6J9-45611-00	REC6G5-45501-21 XL 25,3"	REC6J9-45332-00-CA
L150F ETOL L150F EOTX	2001	2001	REC6G5-45551-00	REC6G5-45560-00	REC6G5-45570-00	REC6G5-45631-00	REC6E5-45633-01	REC6J9-45611-00	REC6G5-45501-21 XL 25,3"	REC6J9-45332-00-CA
LZ150P ETO	2000	2006	REC6G5-45551-00	REC6G5-45560-00	REC6G5-45570-00	REC6G5-45631-00	REC6E5-45633-01	REC6J9-45611-00	REC6G5-45501-21 XL 25,3"	REC6J9-45332-00-CA
Z150P ETO	2000	2000	REC6G5-45551-00	REC6G5-45560-00	REC6G5-45570-00	REC6G5-45631-00	REC6E5-45633-01	REC6J9-45611-00	REC6G5-45501-21 XL 25,3"	REC6J9-45332-00-CA
Z150P ETOL Z150P ETOX	2001	2006	REC6G5-45551-00	REC6G5-45560-00	REC6G5-45570-00	REC6G5-45631-00	REC6E5-45633-01	REC6J9-45611-00	REC6G5-45501-21 XL 25,3"	REC6J9-45332-00-CA
Z150Q ETO	2000	2000				REC6G5-45631-00	REC6E5-45633-01	REC6J9-45611-00		REC6J9-45332-00-CA
Z150Q ETOL	1984	1989				REC6G5-45631-00	REC6E5-45633-01	REC6J9-45611-00		REC6J9-45332-00-CA
175A	1986	1987	REC6G5-45551-00	REC6G5-45560-00	REC6G5-45570-00	REC6G5-45631-00	REC6E5-45633-01	REC6E5-45611-00		
175A ETO	1990	1994	REC6G5-45551-00	REC6G5-45560-00	REC6G5-45570-00	REC6G5-45631-00	REC6E5-45633-01	REC6E5-45611-00		
175B	1995	1995	REC6G5-45551-00	REC6G5-45560-00	REC6G5-45570-00	REC6G5-45631-00	REC6E5-45633-01	REC6J9-45611-00	REC6G5-45501-21 XL 25,3"	REC6J9-45332-00-CA
175B	1996	1998	REC6G5-45551-00	REC6G5-45560-00	REC6G5-45570-00	REC6G5-45631-00	REC6E5-45633-01	REC6J9-45611-00	REC6G5-45501-21 XL 25,3"	REC6J9-45332-00-CA
175D	2000	2000	REC6G5-45551-00	REC6G5-45560-00	REC6G5-45570-00	REC6G5-45631-00	REC6E5-45633-01	REC6J9-45611-00	REC6G5-45501-21 XL 25,3"	REC6J9-45332-00-CA
175D ETO	2001	2003	REC6G5-45551-00	REC6G5-45560-00	REC6G5-45570-00	REC6G5-45631-00	REC6E5-45633-01	REC6J9-45611-00	REC6G5-45501-21 XL 25,3"	REC6J9-45332-00-CA
175D ETOL	2001	2002	REC6G5-45551-00	REC6G5-45560-00	REC6G5-45570-00	REC6G5-45631-00	REC6E5-45633-01	REC6J9-45611-00	REC6G5-45501-21 XL 25,3"	REC6J9-45332-00-CA
175D ETOX	2001	2006	REC6G5-45551-00	REC6G5-45560-00	REC6G5-45570-00	REC6G5-45631-00	REC6E5-45633-01	REC6J9-45611-00	REC6G5-45501-21 XL 25,3"	REC6J9-45332-00-CA
Z175G ETOX	2001	2001	REC6G5-45551-00	REC6G5-45560-00	REC6G5-45570-00	REC6G5-45631-00	REC6E5-45633-01	REC6J9-45611-00	REC6G5-45501-21 XL 25,3"	REC6J9-45332-00-CA
Z175H ETOL	1984	1989				REC6G5-45631-00	REC6E5-45633-01	REC6J9-45611-00	REC6G5-45501-21 XL 25,3"	REC6J9-45332-00-CA
200A	1986	1987	REC6G5-45551-00	REC6G5-45560-00	REC6G5-45570-00	REC6G5-45631-00	REC6E5-45633-01	REC6J9-45611-00		
200A ETO	1990	1994	REC6G5-45551-00	REC6G5-45560-00	REC6G5-45570-00	REC6G5-45631-00	REC6E5-45633-01	REC6J9-45611-00	REC6G5-45501-21 XL 25,3"	REC6J9-45332-00-CA
200B	1990	1995	REC6G5-45551-00	REC6G5-45560-00	REC6G5-45570-00	REC6G5-45631-00	REC6E5-45633-01	REC6J9-45611-00	REC6G5-45501-21 XL 25,3"	REC6J9-45332-00-CA

MODELO MODEL MODELLO	DESDE FROM DELL' ANNO	HASTA TO ALL' ANNO	PIÑÓN ATAQUE GEAR PIGNONE INNEST0	PIÑÓN AVANTE GEAR FORWARD PIGNONE MARCIA AVANTI	PIÑÓN M. ATRÁS GEAR REVERSE PIGNONE MAR. INDIETRO	PIÑÓN M. ATRÁS GEAR REVERSE PIGNONE MAR. INDIETRO	MUELLE SPRING MOLLA	EJE HÉLICE PROPELLER SHAFT ASSE ELICA	EJE VERTICAL DRIVESHAFT ASSEMBLY ASSE VERT.	DIÁBOLO CARRIER COP. CASSA INGRANAGGI
200F	1996	1998	REC6G5-45551-00	REC6G5-45560-00	REC6G5-45570-00	REC6G5-45631-00	REC6E5-45633-01	REC6J9-45611-00	REC6G5-45501-21 XL 25,3"	REC6J9-45332-00-CA
200F ETO	2000	2000	REC6G5-45551-00	REC6G5-45560-00	REC6G5-45570-00	REC6G5-45631-00	REC6E5-45633-01	REC6J9-45611-00	REC6G5-45501-21 XL 25,3"	REC6J9-45332-00-CA
200F ETOL 200F ETOX	2001	2006	REC6G5-45551-00	REC6G5-45560-00	REC6G5-45570-00	REC6G5-45631-00	REC6E5-45633-01	REC6J9-45611-00	REC6G5-45501-21 XL 25,3"	REC6J9-45332-00-CA
200G	1999	1999				REC6G5-45631-00	REC6E5-45633-01	REC6J9-45611-00		REC6J9-45332-00-CA
200G ETO	2000	2000				REC6G5-45631-00	REC6E5-45633-01	REC6J9-45611-00		REC6J9-45332-00-CA
200G ETOL	2001	2003				REC6G5-45631-00	REC6E5-45633-01	REC6J9-45611-00	REC6G5-45501-21 XL 25,3"	REC6J9-45332-00-CA
F200A ETX	2002	2006				REC69J-45631-00	REC61A-45633-00	REC69J-45611-00		
F200C ETX	2006	2006				REC69J-45631-00	REC61A-45633-00	REC69J-45611-00		
FL200A ETX	2002	2006				REC69J-45631-00	REC61A-45633-00	REC69J-45611-00		
FL200C ETX	2006	2006				REC69J-45631-00	REC61A-45633-00	REC69J-45611-00		
L200A	1988	1989	REC6G5-45551-00	REC6G5-45560-00	REC6G5-45570-00	REC6G5-45631-00	REC6E5-45633-01			
L200B	1990	1994	REC6G5-45551-00	REC6G5-45560-00	REC6G5-45570-00	REC6G5-45631-00	REC6E5-45633-01	REC69J-45611-00	REC6G5-45501-21 XL 25,3"	REC6J9-45332-00-CA
L200B	1995	1995	REC6G5-45551-00	REC6G5-45560-00	REC6G5-45570-00	REC6E5-45631-00	REC6E5-45633-01	REC69J-45611-00	REC6G5-45501-21 XL 25,3"	REC6J9-45332-00-CA
L200F	1996	1998	REC6G5-45551-00	REC6G5-45560-00	REC6G5-45570-00	REC6G5-45631-00	REC6E5-45633-01	REC69J-45611-00	REC6G5-45501-21 XL 25,3"	REC6J9-45332-00-CA
L200F ETO	2000	2000	REC6G5-45551-00	REC6G5-45560-00	REC6G5-45570-00	REC6G5-45631-00	REC6E5-45633-01	REC69J-45611-00	REC6G5-45501-21 XL 25,3"	REC6J9-45332-00-CA
L200F ETOL	2001	2006	REC6G5-45551-00	REC6G5-45560-00	REC6G5-45570-00	REC6G5-45631-00	REC6E5-45633-01	REC69J-45611-00	REC6G5-45501-21 XL 25,3"	REC6J9-45332-00-CA
FL200F ETOX	2001	2001	REC6G5-45551-00	REC6G5-45560-00	REC6G5-45570-00	REC6G5-45631-00	REC6E5-45633-01	REC69J-45611-00	REC6G5-45501-21 XL 25,3"	REC6J9-45332-00-CA
LZ200N ETC	2001	2007	REC6G5-45551-00	REC6G5-45560-00	REC6G5-45570-00	REC6G5-45631-00	REC6E5-45633-01	REC69J-45611-00	REC6G5-45501-21 XL 25,3"	REC6J9-45332-00-CA
Z200N ETO	2000	2000	REC6G5-45551-00	REC6G5-45560-00	REC6G5-45570-00	REC6G5-45631-00	REC6E5-45633-01	REC69J-45611-00	REC6G5-45501-21 XL 25,3"	REC6J9-45332-00-CA
Z200N ETOL	2001	2006	REC6G5-45551-00	REC6G5-45560-00	REC6G5-45570-00	REC6G5-45631-00	REC6E5-45633-01	REC69J-45611-00	REC6G5-45501-21 XL 25,3"	REC6J9-45332-00-CA
Z200N ETOX	2001	2006	REC6G5-45551-00	REC6G5-45560-00	REC6G5-45570-00	REC6G5-45631-00	REC6E5-45633-01	REC69J-45611-00	REC6G5-45501-21 XL 25,3"	REC6J9-45332-00-CA
Z200P ETOL	2003	2006	REC6G5-45551-00	REC6G5-45560-00	REC6G5-45570-00	REC6G5-45631-00	REC6E5-45633-01	REC69J-45611-00		REC6J9-45332-00-CA
220A	1984	1986				REC6G5-45631-00	REC6E5-45633-01	REC6E5-45611-00	REC6G5-45501-21 XL 25,3"	REC6J9-45332-00-CA
225A	1987	1989					REC6E5-45633-01	REC6J9-45611-00	REC6G5-45501-21 XL 25,3"	REC6J9-45332-00-CA
225B	1990	1994				REC6G5-45631-00	REC6E5-45633-01	REC69J-45611-00	REC6G5-45501-21 XL 25,3"	REC6J9-45332-00-CA
225B	1995	1995				REC6G5-45631-00	REC6E5-45633-01	REC69J-45611-00	REC6G5-45501-21 XL 25,3"	REC6J9-45332-00-CA
225D	1996	1998				REC6G5-45631-00	REC6E5-45633-01	REC6E5-45611-00	REC6G5-45501-21 XL 25,3"	REC6J9-45332-00-CA
225D ETO	2000	2000				REC6G5-45631-00	REC6E5-45633-01	REC69J-45611-00	REC6G5-45501-21 XL 25,3"	REC6J9-45332-00-CA
225D ETOL 225D ETOX	2001	2003				REC6G5-45631-00	REC6E5-45633-01	REC69J-45611-00	REC6G5-45501-21 XL 25,3"	REC6J9-45332-00-CA
225G ETOL	2001	2003				REC6G5-45631-00	REC6E5-45633-01	REC69J-45611-00		REC6J9-45332-00-CA

GUÍA RODAMIENTOS COLA
STERN DRIVE BEARING APPLICATIONS
GUIDA CUSCINETTI TRASMISIONE

MODELO MODEL MODELLO	DESDE FROM DELL' ANNO	HASTA TO ALL' ANNO	AGUJA EJE COLA CYLIND. DRIVE SHAFT CUSCINETTO INF. ASSE VERT.	RODILLOS EJE VERT. ROLL BEAR DRIVE SHAFT CUS. INTERNO ASSE VERTICALE	PIÑÓN ATAQUE ROLL. BEARING GEAR CUS. PIGNONE INNESTO	AGUJAS DIÁBOLO CYL. CARRIER CUS. RULLI PER COP. CASSA INGRANAGGI	AGUJAS M. AVAN CYL. GEAR FW CUS. A RULLI PIG. M. AVANTI	ROD. PIÑÓN M. AVAN. ROLL BEAR GEAR FW CUS. CONICI PIG. M. AVANTI	AGUJAS M. ATRÁS CYL. GEAR R.V. CUS. CONICI PIG. M. INDIETRO	PIÑÓN M. ATRÁS BALLS GEAR R.V. CUS. PIGNONE M. INDIETRO
F8A	1986	1989				REC93315-317U2		REC93332-00005		REC93306-00501
F8B	1985	1999	REC93315-314V8		REC93341-214U1	REC93315-317U2		REC93332-00005		REC93306-00501
F8B E F8B EH F8B MH	1999	1999	REC93315-314V8		REC93341-414V1	REC93315-317U2		REC93332-00005		REC93306-00501
FT8D EL FT8D EPL	2001	2004	REC93315-314V8		REC93341-414V1	REC93315-317U2		REC93332-00005		REC93306-00501
FT8D EPX	2001	2002	REC93315-314V8		REC93341-414V1	REC93315-317U2		REC93332-00005		REC93306-00501
FT8D EX FT8D MHL FT8D MHX	2001	2004	REC93315-314V8		REC93341-414V1	REC93315-317U2		REC93332-00005		REC93306-00501
9.9D	1985	1989	REC93315-314V8		REC93341-141U1	REC93315-317U2		REC93332-00005		REC93306-00501
9.9D	1985	1995	REC93315-314V8		REC93341-214U1	REC93315-317U2		REC93332-00005		REC93306-00501
9.9D	1990	1995	REC93315-314V8		REC93341-414V1	REC93315-317U2		REC93332-00005		REC93306-00519
9.9F	1995	1999	REC93315-314V8		REC93341-414V1	REC93315-317U2		REC93332-00005		REC93306-00501
9.9F MH	2000	2000	REC93315-314V8		REC93341-414V1	REC93315-317U2		REC93332-00005		REC93306-00501
9.9F MHL 9.9F MHS	2001	2006	REC93315-314V8		REC93341-41414	REC93315-317U2		REC93332-00005		REC93306-00501

MODELO MODEL MODELLO	DESDE FROM DELL' ANNO	HASTA TO ALL' ANNO	AGUJA EJE COLA CYLIND. DRIVE SHAFT CUSCINETTO INF. ASSE VERT.	RODILLOS EJE VERT. ROLL BEAR DRIVE SHAFT CUS. INTERNO ASSE VERTICALE	PIÑÓN ATAQUE ROLL. BEARING GEAR CUS. PIGNONE INNESTO	AGUJAS DIÁBOLO CYL. CARRIER CUS. RULLI PER COP. CASSA INGRANAGGI	AGUJAS M. AVAN CYL. GEAR FW CUS. A RULLI PIG. M. AVANTI	ROD. PIÑÓN M. AVAN. ROLL BEAR GEAR FW CUS. CONICI PIG. M. AVANTI	AGUJAS M. ATRÁS CYL. GEAR R.V. CUS. CONICI PIG. M. INDIETRO	PIÑÓN M. ATRÁS BALLS GEAR R.V. CUS. PIGNONE M. INDIETRO
9.9F WC 9.9F WH	2000	2000	REC93315-314V8		REC93341-414V1	REC93315-317U2		REC93332-00005		REC93306-00501
9.9F WHL 9.9F WHS	2001	2001	REC93315-314V8		REC93341-41414	REC93315-317U2		REC93332-00005		REC93306-00501
F9.9B	1985	1997	REC93315-314V8		REC93341-214U1	REC93315-317U2		REC93332-00005		REC93306-00501
F9.9B E F9.9B EH F9.9B MH	1999	1999	REC93315-314V8		REC93341-414V1	REC93315-317U2		REC93332-00005		REC93306-00501
F9.9C	1998	1998	REC93315-314V8		REC93341-414V1	REC93315-317U2		REC93332-00005		REC93306-00501
F9.9C E F9.9C EH	2000	2000	REC93315-314V8		REC93341-414V1	REC93315-317U2		REC93332-00005		REC93306-00501
F9.9C EL F9.9C ES	2001	2006	REC93315-314V8		REC93341-41414	REC93315-317U2		REC93332-00005		REC93306-00501
F9.9C MH	2000	2000	REC93315-314V8		REC93341-414V1	REC93315-317U2		REC93332-00005		REC93306-00501
F9.9C MHL F9.9C MHS	2001	2006	REC93315-314V8		REC93341-41414	REC93315-317U2		REC93332-00005		REC93306-00501
FT9.9A	1999	1999				REC93315-317U2		REC93332-00005		REC93306-00501
FT9.9D	1999	1999	REC93315-314V8		REC93341-414V1	REC93315-317U2		REC93332-00005		REC93306-00501
FT9.9D E FT9.9D EH	2000	2000	REC93315-314V8		REC93341-414V1	REC93315-317U2		REC93332-00005		REC93306-00501
FT9.9D EHL FT9.9D EHX	2001	2001	REC93315-314V8		REC93341-414V1	REC93315-317U2		REC93332-00005		REC93306-00501
FT9.9D EL	2001	2006	REC93315-314V8		REC93341-414V1	REC93315-317U2		REC93332-00005		REC93306-00501
FT9.9D EP	2000	2000	REC93315-314V8		REC93341-414V1	REC93315-317U2		REC93332-00005		REC93306-00501
FT9.9D EPL FT9.9D EPX	2001	2002	REC93315-314V8		REC93341-414V1	REC93315-317U2		REC93332-00005		REC93306-00501
FT9.9D ES	2001	2001	REC93315-314V8		REC93341-414V1	REC93315-317U2		REC93332-00005		REC93306-00501
FT9.9D EX	2001	2006	REC93315-314V8		REC93341-414V1	REC93315-317U2		REC93332-00005		REC93306-00501
FT9.9D MH	2000	2000	REC93315-314V8		REC93341-414V1	REC93315-317U2		REC93332-00005		REC93306-00501
FT9.9D MHL	2001	2006	REC93315-314V8		REC93341-414V1	REC93315-317U2		REC93332-00005		REC93306-00501
FT9.9D MHX	2001	2001	REC93315-314V8		REC93341-414V1	REC93315-317U2		REC93332-00005		REC93306-00501
13.5A	1999	1999	REC93315-314V8		REC93341-414V1	REC93315-317U2		REC93332-00005		REC93306-00501
13.5A MH	2000	2000	REC93315-314V8		REC93341-414V1	REC93315-317U2		REC93332-00005		REC93306-00501
13.5A MHL 13.5A MHS	2001	2004	REC93315-314V8		REC93341-41414	REC93315-317U2		REC93332-00005		REC93306-00501
13.5A WH	2000	2000	REC93315-314V8		REC93341-414V1	REC93315-317U2		REC93332-00005		REC93306-00501
F13.5A EHL	2005	2006	REC93315-314V8			REC93315-317U2		REC93332-00005		REC93306-00501
F13.5A EPL	2005	2005	REC93315-314V8		REC93341-41414	REC93315-317U2		REC93332-00005		REC93306-00501
F13.5A EPS	2005	2005	REC93315-314V8			REC93315-317U2		REC93332-00005		REC93306-00501
F13.5A MH	2001	2001	REC93315-314V8			REC93315-317U2				REC93306-00501
F13.5A MHL F13.5A MHS	2002	2006	REC93315-314V8		REC93341-41414	REC93315-317U2		REC93332-00005		REC93306-00501
15D	1985	1989	REC93315-314V8		REC93341-214U1	REC93315-317U2		REC93332-00005		REC93306-00501
15D	1985	1995	REC93315-314V8		REC93341-214U1	REC93315-317U2		REC93332-00005		REC93306-00501
15D	1990	1995	REC93315-314V8		REC93341-414V1	REC93315-317U2		REC93332-00005		REC93306-00501
15F	1995	1999	REC93315-314V8		REC93341-414V1	REC93315-317U2		REC93332-00005		REC93306-00501
15F MH	2000	2000	REC93315-314V8		REC93341-414V1	REC93315-317U2		REC93332-00005		REC93306-00501
15F MHL	2001	2006	REC93315-314V8		REC93341-41414	REC93315-317U2		REC93332-00005		REC93306-00501
15F MHS	2001	2006	REC93315-314V8		REC93341-41414	REC93315-317U2		REC93332-00005		REC93306-00501
15F WC	2000	2000	REC93315-314V8		REC93341-414V1	REC93315-317U2		REC93332-00005		REC93306-00501
15F WCL	2001	2003	REC93315-314V8		REC93341-41414	REC93315-317U2		REC93332-00005		REC93306-00501
15F WCS	2001	2002	REC93315-314V8		REC93341-41414	REC93315-317U2		REC93332-00005		REC93306-00501
F15A	1998	1998	REC93315-314V8		REC93341-414V1	REC93315-317U2		REC93332-00005		REC93306-00501
F15A E	1998	2000	REC93315-314V8		REC93341-414V1	REC93315-317U2		REC93332-00005		REC93306-00501
F15A EH	1998	2000	REC93315-314V8		REC93341-414V1	REC93315-317U2		REC93332-00005		REC93306-00501
F15A EHS	2001	2006	REC93315-314V8		REC93341-41414	REC93315-317U2		REC93332-00005		REC93306-00501
F15A EHL	2001	2006	REC93315-314V8		REC93341-41414	REC93315-317U2		REC93332-00005		REC93306-00501
F15A EL	2001	2006	REC93315-314V8		REC93341-41414	REC93315-317U2		REC93332-00005		REC93306-00501
F15A EP	2000	2000	REC93315-314V8		REC93341-414V1	REC93315-317U2		REC93332-00005		REC93306-00501
F15A EPL	2001	2006	REC93315-314V8		REC93341-41414	REC93315-317U2		REC93332-00005		REC93306-00501
F15A EPS	2001	2006	REC93315-314V8		REC93341-41414	REC93315-317U2		REC93332-00005		REC93306-00501
F15A ES	2001	2006	REC93315-314V8		REC93341-41414	REC93315-317U2		REC93332-00005		REC93306-00501
F15A MH	1998	2000	REC93315-314V8		REC93341-41414	REC93315-317U2		REC93332-00005		REC93306-00501
F15A MHL	2001	2006	REC93315-314V8		REC93341-41414	REC93315-317U2		REC93332-00005		REC93306-00501
F15A MHS	2001	2006	REC93315-314V8		REC93341-41414	REC93315-317U2		REC93332-00005		REC93306-00501
20C	1985	1985	REC93315-017U4			REC93315-22004		REC93332-00005		REC93306-00612
20C	1986	1993	REC93315-017U4			REC93315-22004		REC93332-00005		REC93306-00612
20C	1993	1993	REC93315-017U4			REC93315-22004		REC93332-00005		REC93306-00612
20C M	1990	1997	REC93315-017U4			REC93315-22004		REC93332-00005		REC93306-00612
20C MH	1998	1998	REC93315-017U4			REC93315-22004		REC93332-00005		REC93306-00612
20C MHL	2001	2002	REC93315-017U4			REC93315-22004		REC93332-00005		REC93306-00612
20C MHS	2001	2002	REC93315-017U4			REC93315-22004		REC93332-00005		REC93306-00612
20D	1988	1998		REC93315-22004		REC93315-22004		REC93332-00005		REC93306-00612
20D MHOL	2001	2006		REC93315-22004		REC93315-22004		REC93332-00005		REC93306-00612
20D MHOS	2001	2006		REC93315-22004		REC93315-22004		REC93332-00005		REC93306-00612

MODELO MODEL MODELLO	DESDE FROM DELL' ANNO	HASTA TO ALL' ANNO	AGUJA EJE COLA CYLIND. DRIVE SHAFT CUSCINETTO INF. ASSE VERT.	RODILLOS EJE VERT. ROLL BEAR DRIVE SHAFT CUS. INTERNO ASSE VERTICALE	PIÑÓN ATAQUE ROLL. BEARING GEAR CUS. PIGNONE INNESTO	AGUJAS DIÁBOLO CYL. CARRIER CUS. RULLI PER COP. CASSA INGRANAGGI	AGUJAS M. AVAN CYL. GEAR FW CUS. A RULLI PIG. M. AVANTI	ROD. PIÑÓN M. AVAN. ROLL BEAR GEAR FW CUS. CONICI PIG. M. AVANTI	AGUJAS M. ATRÁS CYL. GEAR R.V. CUS. CONICI PIG. M. INDIETRO	PIÑÓN M. ATRÁS BALLS GEAR R.V. CUS. PIGNONE M. INDIETRO
20D WOL	2001	-		REC93315-22004		REC93315-22004		REC93332-00005		REC93306-00612
20D WOS	2001	-		REC93315-22004		REC93315-22004		REC93332-00005		REC93306-00612
F20A	1998	1999	REC93315-220V7	REC93332-000W5		REC93315-22004		REC93332-00005		REC93306-00612
F20A E	2000	2000		REC93332-000W5		REC93315-22004		REC93332-00005		REC93306-00612
F20A EH	2000	2000	REC93315-220V7	REC93332-000W5		REC93315-22004		REC93332-00005		REC93306-00612
F20A EHS	2001	2001	REC93315-220V7			REC93315-22004		REC93332-00005		REC93306-00612
F20A EL	2001	2001	REC93315-220V7	REC93332-000W5		REC93315-22004		REC93332-00005		REC93306-00612
F20A ES	2001	2006	REC93315-220V7	REC93332-000W5		REC93315-22004		REC93332-00005		REC93306-00612
F20A ET	2000	2000	REC93315-220V7	REC93332-000W5		REC93315-22004		REC93332-00005		REC93306-00612
F20A ETL	2003	2006	REC93315-220V7	REC93332-000W5		REC93315-22004		REC93332-00005		REC93306-00612
F20A MH	2000	2000	REC93315-220V7	REC93332-000W5		REC93315-22004		REC93332-00005		REC93306-00612
F20A MHL	2000	2000	REC93315-220V7	REC93332-000W5		REC93315-22004		REC93332-00005		REC93306-00612
F20A MHS	2001	2001	REC93315-220V7	REC93332-000W5		REC93315-22004		REC93332-00005		REC93306-00612
25B	1994	1995	REC93315-325V1	REC93332-00001		REC93317-22204		REC93332-000W7		REC93306-00702
25B MHL	2001	2006	REC93315-220V7	REC93332-000W5		REC93315-22004		REC93332-00005		REC93306-00612
25B MHS	2001	2006	REC93315-220V7	REC93332-000W5		REC93315-22004		REC93332-00005		REC93306-00612
25B WCS	2001	2002	REC93315-220V7	REC93332-000W5		REC93315-22004		REC93332-00005		REC93306-00612
25D	1985	1985	REC93332-017U4			REC93315-22004		REC93332-00005		REC93306-00612
25D	1986	1987	REC93332-017U4			REC93315-22004		REC93332-00005		REC93306-00612
25D M	1990	1997	REC93332-017U4			REC93315-22004		REC93332-00005		REC93306-00612
25D MH	1998	1998	REC93332-017U4			REC93315-22004		REC93332-00005		REC93306-00612
25D MHL	2001	2001	REC93332-017U4			REC93315-22004		REC93332-00005		REC93306-00612
25D MHS	2001	2001	REC93332-017U4			REC93315-22004		REC93332-00005		REC93306-00612
25J	1987	1991	REC93315-220V7	REC93332-00023		REC93315-22004				REC93306-00612
25J	1992	2000		REC93332-00001						REC93306-00612
25N	1988	1998		REC93315-22004		REC93315-22004		REC93332-00005		REC93306-00612
25N MHOL	2001	2006		REC93315-22004		REC93315-22004		REC93332-00005		REC93306-00612
25N MHOS	2001	2006		REC93315-22004		REC93315-22004		REC93332-00005		REC93306-00612
25N WOL	2001	2003		REC93315-22004		REC93315-22004		REC93332-00005		REC93306-00612
25N WOS	2001	2003				REC93315-22004		REC93332-00005		REC93306-00612
25Q	1988	1991	REC93315-32224	REC93332-00023						REC93306-00612
25Q	1990	1994	REC93315-32224	REC93332-00001		REC93317-22204				REC93306-00702
25V	1996	1996	REC93315-220V7	REC93332-000W5		REC93315-22004		REC93332-00005		REC93306-00612
25V	1996	1998	REC93315-220V7	REC93332-000W5		REC93315-22004		REC93332-00005		REC93306-00612
25V MHL	2001	2001	REC93315-220V7	REC93332-000W5		REC93315-22004		REC93332-00005		REC93306-00612
25V MHS	2001	2001	REC93315-220V7	REC93332-000W5		REC93315-22004		REC93332-00005		REC93306-00612
25V WCS	2001	2001	REC93315-220V7	REC93332-000W5		REC93315-22004		REC93332-00005		REC93306-00612
F25A E	2000	2000	REC93315-220V7	REC93332-000W5		REC93315-22004		REC93332-00005		REC93306-00612
F25A EH	2000	2000	REC93315-220V7	REC93332-000W5		REC93315-22004		REC93332-00005		REC93306-00612
F25A EHL	2001	2002	REC93315-220V7	REC93332-000W5		REC93315-22004		REC93332-00005		REC93306-00612
F25A EHS	2001	2001	REC93315-220V7	REC93332-000W5		REC93315-22004		REC93332-00005		REC93306-00612
F25A EL	2001	2006	REC93315-220V7	REC93332-000W5		REC93315-22004		REC93332-00005		REC93306-00612
F25A ES	2001	2006	REC93315-220V7	REC93332-000W5		REC93315-22004		REC93332-00005		REC93306-00612
F25A ET	2000	2000	REC93315-220V7	REC93332-000W5		REC93315-22004		REC93332-00005		REC93306-00612
F25A ETL	2001	2006	REC93315-220V7	REC93332-000W5		REC93317-22204		REC93332-00005		REC93306-00612
F25A MH	2000	2000	REC93315-220V7	REC93332-000W5		REC93315-22004		REC93332-00005		REC93306-00612
F25A MHL	2001	2006	REC93315-220V7	REC93332-000W5		REC93315-22004		REC93332-00005		REC93306-00612
F25A MHS	2001	2006	REC93315-220V7	REC93332-000W5		REC93315-22004		REC93332-00005		REC93306-00612
FT25B ED	2000	2000	REC93315-32224	REC93332-00001		REC93317-22204		REC93332-00003		REC93306-001U1
FT25B EDL	2001	2002	REC93315-32224	REC93332-00001		REC93317-22204		REC93332-00003		REC93306-001U1
FT25B EDX	2001	2002	REC93315-32224	REC93332-00001		REC93317-22204		REC93332-00003		REC93306-001U1
FT25B ET	2000	2000	REC93315-32224	REC93332-00001		REC93317-22204		REC93332-00003		REC93306-001U1
FT25B ETL	2001	2006	REC93315-32224	REC93332-00001		REC93317-22204		REC93332-00003		REC93306-001U1
FT25B ETX	2001	2002	REC93315-32224	REC93332-00001		REC93317-22204		REC93332-00003		REC93306-001U1
30A	1985	1985	REC93315-017U4			REC93315-22004		REC93332-00005		REC93306-00612
30A M	1990	1992	REC93315-017U4		REC93315-22004	REC93315-22004		REC93332-00005		REC93306-00612
30D	1986	1991	REC93315-220V7	REC93332-00023		REC93315-22004				REC93306-00612
30D	1992	2000	REC93315-220V7	REC93332-00001		REC93315-22004				REC93306-00612
30D EOL	2001	2006	REC93315-220V7	REC93332-00001		REC93315-22004				REC93306-00612
30D EOS	2001	2006	REC93315-220V7	REC93332-00001		REC93315-22004				REC93306-00612
30D ETOL	2001	2006	REC93315-220V7	REC93332-00001		REC93315-22004				REC93306-00612
30D MHOL	2001	2006	REC93315-220V7	REC93332-00001		REC93315-22004				REC93306-00612
30D MHOS	2001	2006	REC93315-220V7	REC93332-00001		REC93315-22004				REC93306-00612
30D OL	2001	2003		REC93332-00001		REC93315-22004				REC93306-00612
30D EOS	2001	2006		REC93332-00001		REC93315-22004				REC93306-00612
30G	1996	1996	REC93315-220V7	REC93332-000W5		REC93315-22004		REC93332-00005		REC93306-00612
30G	1996	1998	REC93315-220V7	REC93332-000W5		REC93315-22004		REC93332-00005		REC93306-00612
30G MHS	2001	2001	REC93315-220V7	REC93332-000W5		REC93315-22004		REC93332-00005		REC93306-00612

MODELO MODEL MODELLO	DESDE FROM DELL' ANNO	HASTA TO ALL' ANNO	AGUJA EJE COLA CYLIND. DRIVE SHAFT CUSCINETTO INF. ASSE VERT.	RODILLOS EJE VERT. ROLL BEAR DRIVE SHAFT CUS. INTERNO ASSE VERTICALE	PIÑÓN ATAQUE ROLL. BEARING GEAR CUS. PIGNONE INNESTO	AGUJAS DIÁBOLO CYL. CARRIER CUS. RULLI PER COP. CASSA INGRANAGGI	AGUJAS M. AVAN CYL. GEAR FW CUS. A RULLI PIG. M. AVANTI	ROD. PIÑÓN M. AVAN. ROLL BEAR GEAR FW CUS. CONICI PIG. M. AVANTI	AGUJAS M. ATRÁS CYL. GEAR R.V. CUS. CONICI PIG. M. INDIETRO	PIÑÓN M. ATRÁS BALLS GEAR R.V. CUS. PIGNONE M. INDIETRO
30G WCS	2001	2001	REC93315-220V7	REC93332-000W5		REC93315-22004		REC93332-00005		REC93306-00612
30H MHS	2001	2002	REC93315-220V7	REC93332-000W5		REC93315-22004		REC93332-00005		REC93306-00612
30H WCS	2001	2002	REC93315-220V7	REC93332-000W5		REC93315-22004		REC93332-00005		REC93306-00612
F30A ETL	2001	2006	REC93315-32224	REC93332-00001		REC93317-22204		REC93332-00003		REC93306-001U1
F30A ETS	2001	2006	REC93315-32224	REC93332-00001		REC93317-22204		REC93332-00003		REC93306-001U1
F30A MHDL	2001	2006	REC93315-32224	REC93332-00001		REC93317-22204		REC93332-00003		REC93306-001U1
F30A MHDS	2001	2006	REC93315-32224	REC93332-00001		REC93317-22204		REC93332-00003		REC93306-001U1
40G WH	2003	2003	REC93315-324U1	REC93315-217U0	REC93390-000U0			REC93332-000U0		
40H	1985	1990	REC93315-32224	REC93332-00023		REC93317-22204				REC93306-00702
40H	1991	1993	REC93315-32224	REC93332-00001		REC93317-22204				REC93306-00702
40Q	1993	1998	REC93315-32224	REC93332-00001		REC93317-22204		REC93332-00003		REC93306-00702
40Q E	1992	1992	REC93315-32224	REC93332-00023		REC93317-22204		REC93332-00003		REC93306-00702
40Q M	1990	1992	REC93315-32224	REC93332-00023		REC93317-22204		REC93332-00003		REC93306-00702
40R MHO	2000	2000	REC93315-32224	REC93332-00001		REC93317-22204		REC93332-00003		REC93306-001U1
40R ROS	2001	2001	REC93315-32224	REC93332-00001		REC93317-22204		REC93332-00003		REC93306-001U1
40V	1995	1998	REC93315-32224	REC93332-00001		REC93317-22204		REC93332-00003		REC93306-001U1
40V EO	2000	2000	REC93315-32224	REC93332-00001		REC93317-22204		REC93332-00003		REC93306-001U1
40V EOL	2001	2006	REC93315-32224	REC93332-00001		REC93317-22204		REC93332-00003		REC93306-001U1
40V EOS	2001	2006	REC93315-32224	REC93332-00001		REC93317-22204		REC93332-00003		REC93306-001U1
40V ETO	2000	2000	REC93315-32224	REC93332-00001		REC93317-22204		REC93332-00003		REC93306-001U1
40V ETOL	2001	2003	REC93315-32224	REC93332-00001		REC93317-22204		REC93332-00003		REC93306-001U1
40V ETOS	2001	2003	REC93315-32224	REC93332-00001		REC93317-22204		REC93332-00003		REC93306-001U1
40V MHOL	2001	2006	REC93315-32224	REC93332-00001		REC93317-22204		REC93332-00003		REC93306-001U1
40V MHOS	2001	2006	REC93315-32224	REC93332-00001		REC93317-22204		REC93332-00003		REC93306-001U1
40V MO	2000	2000	REC93315-32224	REC93332-00001		REC93317-22204		REC93332-00003		REC93306-001U1
40X	1998	1998	REC93315-32224	REC93332-00001		REC93317-22204		REC93332-00003		REC93306-001U1
40X MH	2000	2000	REC93315-32224	REC93332-00001		REC93317-22204		REC93332-00003		REC93306-001U1
40X MHL	2001	2006	REC93315-32224	REC93332-00001		REC93317-22204		REC93332-00003		REC93306-001U1
40X MHS	2001	2002	REC93315-32224	REC93332-00001		REC93317-22204		REC93332-00003		REC93306-001U1
40X W	2000	2000	REC93315-32224	REC93332-00001		REC93317-22204		REC93332-00003		REC93306-001U1
40X WL	2001	2001	REC93315-32224	REC93332-00001		REC93317-22204		REC93332-00003		REC93306-001U1
40X WS	2001	2001	REC93315-32224	REC93332-00001		REC93317-22204		REC93332-00003		REC93306-001U1
40X WT	2000	2000		REC93332-00001		REC93317-22204		REC93332-00003		REC93306-001U1
40X WTL	2001	2003	REC93315-32224	REC93332-00001		REC93317-22204		REC93332-00003		REC93306-001U1
40Y ETOL	2001	2006	REC93315-32224	REC93332-00001		REC93317-22204		REC93332-00003		REC93306-001U1
40Y MHOS	2001	2006	REC93315-32224	REC93332-00001		REC93317-22204		REC93332-00003		REC93306-001U1
E40G MH	2003	2003	REC93315-324U1	REC93315-217U0	REC93390-000U0			REC93332-000U0		REC93332-000U0
E40G MHL	2003	2003	REC93315-324U1	REC93315-217U0	REC93390-000U0			REC93332-000U0		
E40G MHS	2003	2003	REC93315-324U1	REC93315-217U0	REC93390-000U0			REC93332-000U0		REC93332-000U0
F40A	1999	1999	REC93315-32224	REC93332-00001		REC93317-22204		REC93332-00003		REC93306-001U1
F40A ED	1999	1999	REC93315-32224	REC93332-00001		REC93317-22204		REC93332-00003		REC93306-001U1
F40A EDL	2001	2001	REC93315-32224	REC93332-00001		REC93317-22204		REC93332-00003		REC93306-001U1
F40A ET	1999	1999	REC93315-32224	REC93332-00001		REC93317-22204		REC93332-00003		REC93306-001U1
F40A ETL	2001	2002	REC93315-32224	REC93332-00001		REC93317-22204		REC93332-00003		REC93306-001U1
F40A ED	1999	1999	REC93315-325V1	REC93332-00001		REC93317-22204		REC93332-00003		REC93306-207U0
F40B ED	2000	2001	REC93315-32224	REC93332-00001		REC93317-22204		REC93332-00003		REC93306-001U1
F40B EDL	2001	2006	REC93315-32224	REC93332-00001		REC93317-22204		REC93332-00003		REC93306-001U1
F40B EDS	2001	2002	REC93315-32224	REC93332-00001		REC93317-22204		REC93332-00003		REC93306-001U1
F40B ET	2000	2001	REC93315-32224	REC93332-00001		REC93317-22204		REC93332-00003		REC93306-001U1
F40B ETL	2001	2006	REC93315-32224	REC93332-00001		REC93317-22204		REC93332-00003		REC93306-001U1
F40B ETS	2001	2006	REC93315-32224	REC93332-00001		REC93317-22204		REC93332-00003		REC93306-001U1
F40B MHD	2000	2000	REC93315-32224	REC93332-00001		REC93317-22204		REC93332-00003		REC93306-001U1
F40B MHDL	2001	2006	REC93315-32224	REC93332-00001		REC93317-22204		REC93332-00003		REC93306-001U1
F40B MHDS	2001	2006	REC93315-32224	REC93332-00001		REC93317-22204		REC93332-00003		REC93306-001U1
F40C ETL	2002	2006	REC93315-32224	REC93332-00001		REC93317-22204				
F45A	1996	1999	REC93315-32224	REC93332-00001		REC93317-22204		REC93332-000W7		REC93306-001U1
F45A ED	2000	2000	REC93315-32224	REC93332-00001		REC93317-22204		REC93332-000W7		REC93306-001U1
F45A ET	2000	2000	REC93315-32224	REC93332-00001		REC93317-22204		REC93332-000W7		REC93306-001U1
50D	1984	1990	REC93315-32224	REC93332-00023		REC93317-22204				REC93306-00702
50D	1991	1993	REC93315-32224	REC93332-00001						REC93306-00702
50G	1993	1998	REC93315-325V1	REC93332-00001		REC93317-22204		REC93332-000W7		REC93306-00702
50G ETO	2000	2000	REC93315-325V1	REC93332-00001		REC93317-22204		REC93332-00003		REC93306-00702
50G ETOL	2001	2006	REC93315-325V1	REC93332-00001		REC93317-22204		REC93332-00003		REC93306-00702
50H	1995	1998	REC93315-32224	REC93332-00001		REC93317-22204		REC93332-00003		REC93306-001U1
50H EDO	2000	2000	REC93315-32224	REC93332-00001		REC93317-22204		REC93332-00003		REC93306-001U1
50H EDOL	2001	2002	REC93315-32224	REC93332-00001		REC93317-22204		REC93332-00003		REC93306-001U1
50H EDOS	2001	2002	REC93315-32224	REC93332-00001		REC93317-22204		REC93332-00003		REC93306-001U1
50H MDO	2000	2000	REC93315-32224	REC93332-00001		REC93317-22204		REC93332-00003		REC93306-001U1

MODELO MODEL MODELLO	DESDE FROM DELL' ANNO	HASTA TO ALL' ANNO	AGUJA EJE COLA CYLIND. DRIVE SHAFT CUSCINETTO INF. ASSE VERT.	RODILLOS EJE VERT. ROLL BEAR DRIVE SHAFT CUS. INTERNO ASSE VERTICALE	PIÑÓN ATAQUE ROLL. BEARING GEAR CUS. PIGNONE INNESTO	AGUJAS DIÁBOLO CYL. CARRIER CUS. RULLI PER COP. CASSA INGRANAGGI	AGUJAS M. AVAN CYL. GEAR FW CUS. A RULLI PIG. M. AVANTI	ROD. PIÑÓN M. AVAN. ROLL BEAR GEAR FW CUS. CONICI PIG. M. AVANTI	AGUJAS M. ATRÁS CYL. GEAR R.V. CUS. CONICI PIG. M. INDIETRO	PIÑÓN M. ATRÁS BALLS GEAR R.V. CUS. PIGNONE M. INDIETRO
50H MO	2000	2000	REC93315-32224	REC93332-00001		REC93317-22204		REC93332-00003		REC93306-001U1
F50A	1995	1995	REC93315-32224	REC93332-000U3		REC93317-22204		REC93332-00003		REC93306-001U1
F50A ED	2000	2000	REC93315-32224	REC93332-00001		REC93317-22204		REC93332-00003		REC93306-001U1
F50A EDL	2001	2006	REC93315-32224	REC93332-00001		REC93317-22204		REC93332-00003		REC93306-001U1
F50A ET	2000	2000	REC93315-32224	REC93332-00001		REC93317-22204		REC93332-00003		REC93306-001U1
F50A ETL	2001	2006	REC93315-32224	REC93332-00001		REC93317-22204		REC93332-00003		REC93306-001U1
F50B	1996	1997	REC93315-32224	REC93332-00001		REC93317-22204		REC93332-00003		REC93306-001U1
F50B	1998	1999	REC93315-325V1	REC93332-000U3		REC93317-22204		REC93332-000W7		REC93306-001U1
F50B ET	2000	2000	REC93315-32224	REC93332-00001		REC93317-22204		REC93332-00003		REC93306-001U1
F50F EDL	2005	2006	REC93315-32224	REC93332-00001		REC93317-22204				REC93306-001U1
F50F ETL	2005	2006	REC93315-32224	REC93332-00001		REC93317-22204				REC93306-001U1
FT50B	1998	1999	REC93315-32224	REC93332-00001		REC93317-22204		REC93332-000W7		REC93306-001U1
FT50B ETL	2001	2002	REC93315-32224	REC93332-00001		REC93317-22204		REC93332-00003		REC93306-001U1
FT50C ETL	2002	2006	REC93315-32224	REC93332-00001		REC93317-22204		REC93332-00003		REC93306-001U1
FT50G ETL	2005	2006		REC93332-000U3		REC93317-325U0				REC93306-001U1
55B	1993	1998	REC93315-32224	REC93332-00001		REC93317-22204		REC93332-00003		REC93306-00702
55B E	1990	1991	REC93315-32224	REC93332-00001		REC93317-22204		REC93332-00003		REC93306-00702
55B E	1992	1992	REC93315-32224	REC93332-00023		REC93317-22204		REC93332-00003		REC93306-00702
55B EHD	2000	2000	REC93315-32224	REC93332-00001		REC93317-22204		REC93332-00003		REC93306-00702
55B ET	2000	2000	REC93315-32224	REC93332-00001		REC93317-22204		REC93332-00003		REC93306-00702
55B ETL	2001	2002	REC93315-32224	REC93332-00001		REC93317-22204		REC93332-00003		REC93306-00702
60F	1984	1998	REC93315-325V1	REC93332-00001		REC93317-22204		REC93332-000W7		REC93306-00702
60F EO	2000	2000	REC93315-325V1	REC93332-00001		REC93317-22204		REC93332-00003		REC93306-00702
60F ETO	2000	2000	REC93315-325V1	REC93332-00001		REC93317-22204		REC93332-00003		REC93306-00702
60F ETOL	2001	2006	REC93315-325V1	REC93332-00001		REC93317-22204		REC93332-00003		REC93306-00702
E60H MHDL	2001	2006	REC93315-325V1	REC93332-000U3		REC93317-325U0		REC93332-000W7		REC93306-207U0
F60A ETL	2002	2006	REC93315-32224	REC93332-00001		REC93317-22204				REC93306-001U1
F60C ETL	2005	2006	REC93315-32224	REC93332-00001		REC93317-22204				REC93306-001U1
FT60B ETL	2003	2006		REC93332-000U3		REC93317-325U0				REC93306-207U0
FT60D ETL	2005	2006		REC93332-000U3		REC93317-325U0				REC93306-207U0
70B	1984	1998	REC93315-325V1	REC93332-00001		REC93317-22204		REC93332-000W7		REC93306-00702
70B EDOL	2001	2001	REC93315-325V1	REC93332-00001		REC93317-22204		REC93332-00003		REC93306-00702
70B EO	2000	2000	REC93315-325V1	REC93332-00001		REC93317-22204		REC93332-00003		REC93306-00702
70B ETO	2000	2000	REC93315-325V1	REC93332-00001		REC93317-22204		REC93332-00003		REC93306-00702
70B ETOL	2001	2006	REC93315-325V1	REC93332-00001		REC93317-22204		REC93332-00003		REC93306-00702
75A	1990	1998	REC93315-325V1	REC93332-000U3		REC93317-325U0		REC93332-000W7		REC93306-207U0
75A E	1990	2000	REC93315-325V1	REC93332-000U3		REC93317-325U0		REC93332-000U5		REC93306-207U0
75A EDL	2001	2006	REC93315-325V1	REC93332-000U3		REC93317-325U0		REC93332-000W7		REC93306-207U0
75A EM	1992	1993		REC93332-000U3		REC93317-325U0		REC93332-000U5		REC93306-207U0
75A ET	2000	2000	REC93315-325V1			REC93317-325U0		REC93332-000U5		REC93306-207U0
75A ETL	2001	2002	REC93315-325V1	REC93332-000U3		REC93317-325U0		REC93332-000W7		REC93306-207U0
75A MHD	2000	2000	REC93315-325V1	REC93332-000U3		REC93317-325U0				REC93306-207U0
75C	1998	1998	REC93315-325V1			REC93317-325U0		REC93332-000W7		REC93306-207U0
75C ETO	2000	2000	REC93315-325V1	REC93332-000U3		REC93317-325U0		REC93332-000W7		REC93306-207U0
75C ETOL	2001	2006	REC93315-325V1	REC93332-000U3		REC93317-325U0		REC93332-000W7		REC93306-207U0
80A	1985	1996	REC93315-325V1	REC93332-000U3		REC93317-325U0		REC93332-000U5		REC93306-207U0
F80A	1999	1999		REC93332-000U3		REC93317-325U0	REC93317-322V0			REC93306-207U0
F80A ET	2000	2000		REC93332-000U3		REC93317-325U0	REC93317-322V0			REC93306-207U0
F80A ETL	2001	2006		REC93332-000U3		REC93317-325U0	REC93317-322V0			REC93306-207U0
F80A ETX	2001	2001		REC93332-000U3		REC93317-325U0	REC93317-322V0			REC93306-207U0
F80B ETL	2005	2006		REC93332-000U3		REC93317-325U0	REC93317-322V0			REC93306-207U0
85A	1996	1998	REC93315-325V1	REC93332-000U3		REC93317-325U0		REC93332-000W7		REC93306-207U0
85A E	1990	2000	REC93315-325V1	REC93332-000U3		REC93317-325U0		REC93332-000U5		REC93306-207U0
85A ET	2000	2000	REC93315-325V1	REC93332-000U3		REC93317-325U0		REC93332-000U5		REC93306-207U0
85A ETL	2001	2002	REC93315-325V1	REC93332-000U3		REC93317-325U0		REC93332-000W7		REC93306-207U0
90A	1984	1998	REC93315-325V1	REC93332-000U3		REC93317-325U0		REC93332-000W7		REC93306-207U0
90A ETO	2000	2000	REC93315-325V1	REC93332-000U3		REC93317-325U0		REC93332-000U7		REC93306-207U0
90A ETOL	2001	2006	REC93315-325V1	REC93332-000U3		REC93317-325U0		REC93332-000W7		REC93306-207U0
100A	1998	1998	REC93315-628U9	REC93315-430V5 AGUJAS / NEEDLE / SPILLI REC93341-930U2 AXIAL / ASSIALE		REC93315-430U8	REC93315-425U7	REC93332-000U7		REC93306-208U0
100A ETO	2000	2000	REC93315-628U9	REC93317-330U2 AGUJAS / NEEDLE / SPILLI REC93341-930V2 AXIAL / ASSIALE		REC93315-430U8	REC93315-425U7			REC93306-208U0
100A ETOL	2001	2001	REC93315-628U9	REC93317-330U2 AGUJAS / NEEDLE / SPILLI REC93341-930V2 AXIAL / ASSIALE		REC93315-430U8	REC93315-425U7	REC93332-000U7		REC93306-208U0
F100A	1999	1999		REC93332-000U3		REC93317-325U0	REC93317-322V0			REC93306-207U0

MODELO MODEL MODELLO	DESDE FROM DELL' ANNO	HASTA TO ALL' ANNO	AGUJA EJE COLA CYLIND. DRIVE SHAFT CUSCINETTO INF. ASSE VERT.	RODILLOS EJE VERT. ROLL BEAR DRIVE SHAFT CUS. INTERNO ASSE VERTICALE	PIÑÓN ATAQUE ROLL. BEARING GEAR CUS. PIGNONE INNESTO	AGUJAS DIÁBOLO CYL. CARRIER CUS. RULLI PER COP. CASSA INGRANAGGI	AGUJAS M. AVAN CYL. GEAR FW CUS. A RULLI PIG. M. AVANTI	ROD. PIÑÓN M. AVAN. ROLL BEAR GEAR FW CUS. CONICI PIG. M. AVANTI	AGUJAS M. ATRÁS CYL. GEAR R.V. CUS. CONICI PIG. M. INDIETRO	PIÑÓN M. ATRÁS BALLS GEAR R.V. CUS. PIGNONE M. INDIETRO
F100A ET	2000	2000		REC93332-000U3		REC93317-325U0	REC93317-322V0			REC93306-207U0
F100A ETL	2001	2006		REC93332-000U3		REC93317-325U0	REC93317-322V0			REC93306-207U0
F100A ETX	2001	2001		REC93332-000U3		REC93317-325U0	REC93317-322V0			REC93306-207U0
F100B ETX	2005	2006	REC93315-628U9	REC93317-330U2 AGUJAS / NEEDLE / SPILLI REC93341-930V2 AXIAL / ASSIALE		REC93315-430U8	REC93315-425U7	REC93332-000U7		REC93306-208U0
F100D ETL	2005	2006		REC93332-000U3		REC93317-325U0	REC93317-322V0			REC93306-207U0
115A	1984	1987	REC93315-628U9	REC93317-330U2 AGUJAS / NEEDLE / SPILLI REC93341-930U2 AXIAL / ASSIALE		REC93315-430U8	REC93315-425U7	REC93332-000U7		REC93306-208U0
115B	1988	1995	REC93315-628U9	REC93317-330U2 AGUJAS / NEEDLE / SPILLI REC93341-930U2 AXIAL / ASSIALE		REC93315-430U8	REC93315-425U7	REC93332-000U7		REC93306-208U0
115B	1996	1996	REC93315-628U9	REC93315-430V5 AGUJAS / NEEDLE / SPILLI REC93341-930U2 AXIAL / ASSIALE		REC93315-430U8	REC93315-425U7	REC93332-000U7		REC93306-208U0
115B ETO	1997	1998	REC93315-628U9	REC93315-430V5 AGUJAS / NEEDLE / SPILLI REC93341-930U2 AXIAL / ASSIALE		REC93315-430U8	REC93315-425U7	REC93332-000U7		REC93306-208U0
115B ETO	1999	2000	REC93315-628U9	REC93317-330U2			REC93315-425U7	REC93332-000U7		REC93306-208U0
115B ETOL	2001	2002	REC93315-628U9	REC93317-330U2 AGUJAS / NEEDLE / SPILLI REC93341-930V2 AXIAL / ASSIALE		REC93315-430U8	REC93315-425U7	REC93332-000U7		REC93306-208U0
115C	1990	1995	REC93315-628U9	REC93317-330U2 AGUJAS / NEEDLE / SPILLI REC93341-930U2 AXIAL / ASSIALE		REC93315-430U8	REC93315-425U7	REC93332-000U7	REC93315-430V5	REC93306-208U0
115C ETO	2000	2000	REC93315-628U9	REC93317-330U2 AGUJAS / NEEDLE / SPILLI REC93341-930V2 AXIAL / ASSIALE		REC93315-430U8	REC93315-425U7	REC93332-000U7	REC93315-430V5	REC93306-208U0
115C ETOL	2001	2006	REC93315-628U9	REC93317-330U2 AGUJAS / NEEDLE / SPILLI REC93341-930V2 AXIAL / ASSIALE		REC93315-43061	REC93315-425U7	REC93332-000U7	REC93315-430V5	REC93306-208U0
115C ETOX	2001	2002	REC93315-628U9	REC93317-330U2 AGUJAS / NEEDLE / SPILLI REC93341-930V2 AXIAL / ASSIALE		REC93315-430U8	REC93315-425U7	REC93332-000U7	REC93315-430V5	REC93306-208U0
F115A ET	2000	2000	REC93315-628U9	REC93317-330U2 AGUJAS / NEEDLE / SPILLI REC93341-930V2 AXIAL / ASSIALE		REC93315-430U8	REC93315-425U7	REC93332-000U7	REC93315-430V5	REC93306-208U0
F115A ETL	2001	2006	REC93315-628U9	REC93317-330U2 AGUJAS / NEEDLE / SPILLI REC93341-930V2 AXIAL / ASSIALE		REC93315-430U8	REC93315-425U7	REC93332-000U7	REC93315-430V5	REC93306-208U0
F115A ETX	2001	2006	REC93315-628U9	REC93317-330U2 AGUJAS / NEEDLE / SPILLI REC93341-930V2 AXIAL / ASSIALE		REC93315-430U8	REC93315-425U7	REC93332-000U7	REC93315-430V5	REC93306-208U0
FL115A ET	2000	2000	REC93315-628U9	REC93317-330U2 AGUJAS / NEEDLE / SPILLI REC93341-930V2 AXIAL / ASSIALE		REC93315-430U8	REC93315-425U7	REC93332-000U7	REC93315-430V5	REC93306-208U0
FL115A ETX	2001	2006	REC93315-628U9	REC93317-330U2 AGUJAS / NEEDLE / SPILLI REC93341-930V2 AXIAL / ASSIALE		REC93315-430U8	REC93315-425U7	REC93332-000U7	REC93315-430V5	REC93306-208U0
130B	1990	1994	REC93315-628U9	REC93317-330U2 AGUJAS / NEEDLE / SPILLI REC93341-930U2 AXIAL / ASSIALE		REC93315-430U8	REC93315-425U7	REC93332-000U7	REC93315-430V5	REC93306-208U0
130B ETO	2000	2000	REC93315-628U9	REC93317-330U2 AGUJAS / NEEDLE / SPILLI REC93341-930V2 AXIAL / ASSIALE		REC93315-430U8	REC93315-425U7	REC93332-000U7	REC93315-430V5	REC93306-208U0
130B ETOL	2001	2006	REC93315-628U9	REC93317-330U2 AGUJAS / NEEDLE / SPILLI REC93341-930V2 AXIAL / ASSIALE		REC93315-43061	REC93315-425U7	REC93332-000U7	REC93315-430V5	REC93306-208U0
130B ETOX	2001	2001	REC93315-628U9	REC93317-330U2 AGUJAS / NEEDLE / SPILLI REC93341-930V2 AXIAL / ASSIALE		REC93315-430U8	REC93315-425U7	REC93332-000U7	REC93315-430V5	REC93306-208U0
L130B	1991	1994	REC93315-628U9	REC93317-330U2 AGUJAS / NEEDLE / SPILLI REC93341-930U2 AXIAL / ASSIALE		REC93315-430U8	REC93315-425U7	REC93332-000U7	REC93315-430V5	REC93306-208U0
L130B	1995	1998		REC93315-430V5 AGUJAS / NEEDLE / SPILLI REC93341-930U2 AXIAL / ASSIALE		REC93315-430U8	REC93315-425U7	REC93332-000U7		REC93306-208U0
L130B ETO	2000	2000	REC93315-628U9	REC93317-330U2		REC93315-430U8	REC93315-425U7	REC93332-000U7	REC93315-430V5	REC93306-208U0
L130B ETOX	2001	2001	REC93315-628U9	REC93317-330U2 AGUJAS / NEEDLE / SPILLI REC93341-930V2 AXIAL / ASSIALE		REC93315-430U8	REC93315-425U7	REC93332-000U7	REC93315-430V5	REC93306-208U0

MODELO MODEL MODELLO	DESDE FROM DELL' ANNO	HASTA TO ALL' ANNO	AGUJA EJE COLA CYLIND. DRIVE SHAFT CUSCINETTO INF. ASSE VERT.	RODILLOS EJE VERT. ROLL BEAR DRIVE SHAFT CUS. INTERNO ASSE VERTICALE	PIÑÓN ATAQUE ROLL. BEARING GEAR CUS. PIGNONE INNESTO	AGUJAS DIÁBOLO CYL. CARRIER CUS. RULLI PER COP. CASSA INGRANAGGI	AGUJAS M. AVAN CYL. GEAR FW CUS. A RULLI PIG. M. AVANTI	ROD. PIÑÓN M. AVAN. ROLL BEAR GEAR FW CUS. CONICI PIG. M. AVANTI	AGUJAS M. ATRÁS CYL. GEAR R.V. CUS. CONICI PIG. M. INDIETRO	PIÑÓN M. ATRÁS BALLS GEAR R.V. CUS. PIGNONE M. INDIETRO
140A	1984	1987	REC93315-628U9	REC93317-330U2 AGUJAS / NEEDLE / SPILLI REC93341-930U2 AXIAL / ASSIALE		REC93315-430U8	REC93315-425U7	REC93332-000U7		REC93306-208U0
140B	1988	1989	REC93315-628U9	REC93317-330U2 AGUJAS / NEEDLE / SPILLI REC93341-930U2 AXIAL / ASSIALE		REC93315-430U8	REC93315-425U7	REC93332-000U7		REC93306-208U0
L140B	1989	1989	REC93315-628U9	REC93317-330U2 AGUJAS / NEEDLE / SPILLI REC93341-930U2 AXIAL / ASSIALE		REC93315-430U8	REC93315-425U7	REC93332-000U7	REC93315-430V5	REC93306-208U0
150A	1984	1989	REC93311-928U5	REC93317-330U2 AGUJAS / NEEDLE / SPILLI REC93341-930U2 AXIAL / ASSIALE		REC93315-430U8	REC93315-425V3	REC93332-000V3 STD. ROT REC93390-000U2 C.ROT.	REC93315-430V5	REC93306-209U0 STD. ROT REC93332-00048 C.ROT.
150A ET	1998	2000	REC93311-928U5	REC93317-330U2 AGUJAS / NEEDLE / SPILLI REC93341-930V2 AXIAL / ASSIALE		REC93315-430U8	REC93315-425V3	REC93332-000V3		REC93306-209U0
150A ETO	1986	1987				REC93315-430U8		REC93390-000U2		REC93390-000U2
150A ETL	2001	2002	REC93311-928U5	REC93317-330U2 AGUJAS / NEEDLE / SPILLI REC93341-930V2 AXIAL / ASSIALE		REC93315-430U8	REC93315-425V3	REC93332-000V3		REC93306-209U0
150A ETX	2001	2002	REC93311-928U5	REC93317-330U2 AGUJAS / NEEDLE / SPILLI REC93341-930V2 AXIAL / ASSIALE		REC93315-430U8	REC93315-425V3	REC93332-000V3		REC93306-209U0
150C	1990	1994	REC93311-928U5	REC93317-330U2 AGUJAS / NEEDLE / SPILLI REC93341-930U2 AXIAL / ASSIALE		REC93315-430U8	REC93315-425V3	REC93332-000V3		REC93306-209U0
150F	1996	1998	REC93311-928U5	REC93315-430V5 AGUJAS / NEEDLE / SPILLI REC93341-930V2 AXIAL / ASSIALE		REC93315-430U8	REC93315-425V3	REC93390-000U2		REC93332-00048
150F	1997	1998	REC93311-928U5	REC93315-430V5 AGUJAS / NEEDLE / SPILLI REC93341-930V2 AXIAL / ASSIALE		REC93315-430U8	REC93315-425V3	REC93332-000V3 STD. ROT REC93390-000U2 C.ROT		REC93306-209U0 STD. ROT REC93332-00048 C.ROT.
150F ETO	2000	2000	REC93311-928U5	REC93317-330U2 AGUJAS / NEEDLE / SPILLI REC93341-930V2 AXIAL / ASSIALE		REC93315-430U8	REC93315-425V3	REC93332-000V3 STD. ROT REC93390-000U2 C.ROT.		REC93306-209U0 STD. ROT REC93332-00048 C.ROT.
150F ETOL	2001	2006	REC93311-928U5	REC93317-330U2 AGUJAS / NEEDLE / SPILLI REC93341-930V2 AXIAL / ASSIALE		REC93315-43061	REC93315-425V3	REC93332-000V3 STD. ROT REC93390-000U2 C.ROT.		REC93306-209U0 STD. ROT REC93332-00048 C.ROT.
150F ETOX	2001	2006	REC93311-928U5	REC93317-330U2 AGUJAS / NEEDLE / SPILLI REC93341-930V2 AXIAL / ASSIALE		REC93315-43061	REC93315-425V3	REC93332-000V3 STD. ROT REC93390-000U2 C.ROT.		REC93306-209U0 STD. ROT REC93332-00048 C.ROT.
D150H	1999	1999	REC93315-628U9	REC93317-330U2 AGUJAS / NEEDLE / SPILLI REC93341-930V2 AXIAL / ASSIALE		REC93315-43061		REC93332-00048		REC93332-00048
D150H ETOL	2001	2002	REC93315-628U9	REC93317-330U2 AGUJAS / NEEDLE / SPILLI REC93341-930V2 AXIAL / ASSIALE		REC93315-43061		REC93332-00048		REC93332-00048
F150A ETL	2004	2006	REC93311-928U5	REC93317-330U2 AGUJAS / NEEDLE / SPILLI REC93341-930V2 AXIAL / ASSIALE		REC93315-43061	REC93315-425V3	REC93332-000V3 STD. ROT REC93390-000U2 C.ROT.		REC93306-209U0 STD. ROT REC93332-00048 C.ROT.
F150A ETX	2004	2006	REC93311-928U5	REC93317-330U2 AGUJAS / NEEDLE / SPILLI REC93341-930V2 AXIAL / ASSIALE		REC93315-43061	REC93315-425V3	REC93332-000V3 STD. ROT REC93390-000U2 C.ROT.		REC93306-209U0 STD. ROT REC93332-00048 C.ROT.
FL150A ETL	2004	2006	REC93311-928U5	REC93317-330U2 AGUJAS / NEEDLE / SPILLI REC93341-930V2 AXIAL / ASSIALE		REC93315-43061	REC93315-425V3	REC93332-000V3 STD. ROT REC93390-000U2 C.ROT.		REC93306-209U0 STD. ROT REC93332-00048 C.ROT.
FL150AETX	2004	2006	REC93311-928U5	REC93317-330U2 AGUJAS / NEEDLE / SPILLI REC93341-930V2 AXIAL / ASSIALE		REC93315-43061	REC93315-425V3	REC93332-000V3 STD. ROT REC93390-000U2 C.ROT.		REC93306-209U0 STD. ROT REC93332-00048 C.ROT.
L150A	1988	1989	REC93311-928U5	REC93317-330U2 AGUJAS / NEEDLE / SPILLI REC93341-930U2 AXIAL / ASSIALE		REC93315-430U8		REC93390-000U2	REC93315-430V5	REC93390-000U2
L150C	1990	1994	REC93311-928U5	REC93317-330U2 AGUJAS / NEEDLE / SPILLI REC93341-930U2 AXIAL / ASSIALE		REC93315-430U8	REC93315-425V3	REC93390-000U2	REC93315-430V5	REC93306-209U0
L150C	1995	1995		REC93315-430V5				REC93390-000U2		REC93332-00048
L150F	1996	1998	REC93311-928U5	REC93315-430V5 AGUJAS / NEEDLE / SPILLI REC93341-930V2 AXIAL / ASSIALE		REC93315-430U8	REC93315-425V3	REC93332-000V3 STD. ROT REC93390-000U2 C.ROT.		REC93306-209U0 STD. ROT REC93332-00048 C.ROT.
L150F ETO	2000	2001	REC93311-928U5	REC93317-330U2 AGUJAS / NEEDLE / SPILLI REC93341-930V2 AXIAL / ASSIALE		REC93315-430U8	REC93315-425V3	REC93332-000V3 STD. ROT REC93390-000U2 C.ROT		REC93306-209U0 STD. ROT REC93332-00048 C.ROT.

MODELO MODEL MODELLO	DESDE FROM DELL' ANNO	HASTA TO ALL' ANNO	AGUJA EJE COLA CYLIND. DRIVE SHAFT CUSCINETTO INF. ASSE VERT.	RODILLOS EJE VERT. ROLL BEAR DRIVE SHAFT CUS. INTERNO ASSE VERTICALE	PIÑÓN ATAQUE ROLL. BEARING GEAR CUS. PIGNONE INNESTO	AGUJAS DIÁBOLO CYL. CARRIER CUS. RULLI PER COP. CASSA INGRANAGGI	AGUJAS M. AVAN CYL. GEAR FW CUS. A RULLI PIG. M. AVANTI	ROD. PIÑÓN M. AVAN. ROLL BEAR GEAR FW CUS. CONICI PIG. M. AVANTI	AGUJAS M. ATRÁS CYL. GEAR R.V. CUS. CONICI PIG. M. INDIETRO	PIÑÓN M. ATRÁS BALLS GEAR R.V. CUS. PIGNONE M. INDIETRO
L150F ETOL	2001	2001	REC93311-928U5	REC93317-330U2 AGUJAS / NEEDLE / SPILLI REC93341-930V2 AXIAL / ASSIALE		REC93315-430U8	REC93315-425V3	REC93332-000V3 STD. ROT REC93390-000U2 C.ROT		REC93306-209U0 STD. ROT REC93332-00048 C.ROT.
L150F ETOX	2001	2001	REC93311-928U5	REC93317-330U2 AGUJAS / NEEDLE / SPILLI REC93341-930V2 AXIAL / ASSIALE		REC93315-430U8	REC93315-425V3	REC93332-000V3 STD. ROT REC93390-000U2 C.ROT		REC93306-209U0 STD. ROT REC93332-00048 C.ROT.
LZ150P	2000	2002				REC93315-430U8		REC93390-000U2		REC93390-000U2
LZ150P ETOX	2000	2006	REC93311-928U5	REC93317-330U2 AGUJAS / NEEDLE / SPILLI REC93341-930V2 AXIAL / ASSIALE		REC93315-43061	REC93315-425V3	REC93332-000V3 STD. ROT REC93390-000U2 C.ROT.		REC93306-209U0 STD. ROT REC93332-00048 C.ROT.
LZ150T XRC	2004							REC93390-000U2		REC93390-000U2
Z150P ETO	2000	2000	REC93311-928U5	REC93317-330U2 AGUJAS / NEEDLE / SPILLI REC93341-930V2 AXIAL / ASSIALE		REC93315-430U8	REC93315-425V3	REC93332-000V3 STD. ROT REC93390-000U2 C.ROT.		REC93306-209U0 STD. ROT REC93332-00048 C.ROT.
Z150P ETOL	2001	2006	REC93311-928U5	REC93317-330U2 AGUJAS / NEEDLE / SPILLI REC93341-930V2 AXIAL / ASSIALE		REC93315-43061	REC93315-425V3	REC93332-000V3 STD. ROT REC93390-000U2 C.ROT.		REC93306-209U0 STD. ROT REC93332-00048 C.ROT.
Z150P ETOX	2001	2006	REC93311-928U5	REC93317-330U2 AGUJAS / NEEDLE / SPILLI REC93341-930V2 AXIAL / ASSIALE		REC93315-43061	REC93315-425V3	REC93332-000V3 STD. ROT REC93390-000U2 C.ROT.		REC93306-209U0 STD. ROT REC93332-00048 C.ROT.
Z150Q ETO	2000	2000	REC93311-928U5	REC93317-330U2 AGUJAS / NEEDLE / SPILLI REC93341-930V2 AXIAL		REC93315-430U8	REC93315-425V3	REC93332-000V3		REC93306-209U0
Z150Q ETOL	2001	2006	REC93311-928U5	REC93317-330U2 AGUJAS / NEEDLE / SPILLI REC93341-930V2 AXIAL / ASSIALE		REC93315-43061	REC93315-425V3	REC93332-000V3		REC93306-209U0
175A	1984	1989	REC93311-928U5	REC93317-330U2 AGUJAS / NEEDLE / SPILLI REC93341-930V2 AXIAL / ASSIALE		REC93315-430U8	REC93315-425V3	REC93332-000V3 STD. ROT REC93390-000U2 C.ROT.	REC93315-430V5	REC93306-209U0 STD. ROT REC93332-00048 C.ROT
175A ETO	1986	1987	REC93311-928U5	REC93317-330U2		REC93315-430U8	REC93315-425V3	REC93390-000U2		REC93390-000U2
175B	1990	1994	REC93311-928U5	REC93317-330U2 AGUJAS / NEEDLE / SPILLI REC93341-930V2 AXIAL / ASSIALE		REC93315-430U8	REC93315-425V3	REC93332-000V3		REC93306-209U0
175B	1995	1995	REC93311-928U5	REC93315-430V5		REC93301-30M17	REC93315-425V3	REC93390-000U2		REC93332-00048
175D	1996	1998	REC93311-928U5	REC93315-430V5 AGUJAS / NEEDLE / SPILLI REC93341-930V2 AXIAL / ASSIALE		REC93315-430U8	REC93315-425V3	REC93332-000V3 STD. ROT REC93390-000U2 C.ROT.		REC93306-209U0 STD. ROT REC93332-00048 C.ROT.
175D ETO	2000	2000	REC93311-928U5	REC93317-330U2 AGUJAS / NEEDLE / SPILLI REC93341-930V2 AXIAL / ASSIALE		REC93315-430U8	REC93315-425V3	REC93332-000V3 STD. ROT REC93390-000U2 C.ROT.		REC93306-209U0 STD. ROT REC93332-00048 C.ROT.
175D ETOL	2001	2003	REC93311-928U5	REC93317-330U2 AGUJAS / NEEDLE / SPILLI REC93341-930V2 AXIAL / ASSIALE		REC93315-430U8	REC93315-425V3	REC93332-000V3 STD. ROT REC93390-000U2 C.ROT.		REC93306-209U0 STD. ROT REC93332-00048 C.ROT.
175D ETOX	2001	2002	REC93311-928U5	REC93317-330U2 AGUJAS / NEEDLE / SPILLI REC93341-930V2 AXIAL / ASSIALE		REC93315-430U8	REC93315-425V3	REC93332-000V3 STD. ROT REC93390-000U2 C.ROT.		REC93306-209U0 STD. ROT REC93332-00048 C.ROT.
Z175G ETOX	2001	2006	REC93311-928U5	REC93317-330U2 AGUJAS / NEEDLE / SPILLI REC93341-930V2 AXIAL / ASSIALE		REC93315-43061	REC93315-425V3	REC93332-000V3 STD. ROT REC93390-000U2 C.ROT.		REC93306-209U0 STD. ROT REC93332-00048 C.ROT.
Z175H ETOL	2001	2001	REC93311-928U5	REC93317-330U2 AGUJAS / NEEDLE / SPILLI REC93341-930V2 AXIAL / ASSIALE		REC93315-430U8	REC93315-425V3	REC93332-000V3		REC93306-209U0
200A	1984	1989	REC93311-928U5	REC93317-330U2 AGUJAS / NEEDLE / SPILLI REC93341-930U2 AXIAL / ASSIALE		REC93315-430U8	REC93315-425V3	REC93332-000V3 STD. ROT REC93390-000U2 C.ROT	REC93315-430V5	REC93306-209U0 STD. ROT REC93332-00048 C.ROT.
200A ETO	1986	1987	REC93311-928U5	REC93317-330U2		REC93315-430U8		REC93390-000U2		REC93390-000U2
200B	1990	1994	REC93311-928U5	REC93317-330U2 AGUJAS / NEEDLE / SPILLI REC93341-930U2 AXIAL / ASSIALE		REC93315-430U8	REC93315-425V3	REC93332-000V3		REC93306-209U0
200B	1995	1995	REC93311-928U5	REC93315-430V5		REC93315-430U8	REC93315-425V3	REC93390-000U2		REC93332-00048
200F	1996	1998	REC93311-928U5	REC93315-430V5 AGUJAS / NEEDLE / SPILLI REC93341-930V2 AXIAL / ASSIALE		REC93315-430U8	REC93315-425V3	REC93332-000V3 STD. ROT REC93390-000U2 C.ROT.		REC93306-209U0 STD. ROT REC93332-00048 C.ROT.
200F ETO	2000	2000	REC93311-928U5	REC93317-330U2 AGUJAS / NEEDLE / SPILLI REC93341-930V2 AXIAL / ASSIALE		REC93315-430U8	REC93315-425V3	REC93332-000V3 STD. ROT REC93390-000U2 C.ROT.		REC93306-209U0 STD. ROT REC93332-00048 C.ROT
200F ETOL	2001	2006	REC93311-928U5	REC93317-330U2 AGUJAS / NEEDLE / SPILLI REC93341-930V2 AXIAL / ASSIALE		REC93315-43061	REC93315-425V3	REC93332-000V3 STD. ROT REC93390-000U2 C.ROT.		REC93306-209U0 STD. ROT REC93332-00048 C.ROT.
200F ETOX	2001	2006	REC93311-928U5	REC93317-330U2 AGUJAS / NEEDLE / SPILLI REC93341-930V2 AXIAL / ASSIALE		REC93315-43061	REC93315-425V3	REC93332-000V3 STD. ROT REC93390-000U2 C.ROT.		REC93306-209U0 STD. ROT REC93332-00048 C.ROT.

MODELO MODEL MODELLO	DESDE FROM DELL' ANNO	HASTA TO ALL' ANNO	AGUJA EJE COLA CYLIND. DRIVE SHAFT CUSCINETTO INF. ASSE VERT.	RODILLOS EJE VERT. ROLL BEAR DRIVE SHAFT CUS. INTERNO ASSE VERTICALE	PIÑÓN ATAQUE ROLL. BEARING GEAR CUS. PIGNONE INNESTO	AGUJAS DIÁBOLO CYL. CARRIER CUS. RULLI PER COP. CASSA INGRANAGGI	AGUJAS M. AVAN CYL. GEAR FW CUS. A RULLI PIG. M. AVANTI	ROD. PIÑÓN M. AVAN. ROLL BEAR GEAR FW CUS. CONICI PIG. M. AVANTI	AGUJAS M. ATRÁS CYL. GEAR R.V. CUS. CONICI PIG. M. INDIETRO	PIÑÓN M. ATRÁS BALLS GEAR R.V. CUS. PIGNONE M. INDIETRO
200G	1999	1999	REC93311-928U5	REC93317-330U2 AGUJAS / NEEDLE / SPILLI REC93341-930V2 AXIAL / ASSIALE		REC93315-430U8	REC93315-425V3	REC93332-000V3		REC93306-209U0
200G ETO	2000	2000	REC93311-928U5	REC93317-330U2 AGUJAS / NEEDLE / SPILLI REC93341-930V2 AXIAL / ASSIALE		REC93315-430U8	REC93315-425V3	REC93332-000V3		REC93306-209U0
200G ETOL	2001	2003	REC93311-928U5	REC93317-330U2 AGUJAS / NEEDLE / SPILLI REC93341-930V2 AXIAL / ASSIALE		REC93315-430U8	REC93315-425V3	REC93332-000V3		REC93306-209U0
F200A ETX	2002	2006	REC93311-83280	REC93317-330U2		REC93315-43061		REC93332-000W1		REC93306-209U0 STD. ROT REC93332-00048 C.ROT.
F200C ETX	2006	2006	REC93311-83280	REC93317-330U2				REC93332-000W1		REC93306-209U0 STD. ROT REC93332-00048 C.ROT.
FL200A ETX	2002	2006	REC93311-83280	REC93317-330U2		REC93315-43061		REC93332-000W1		REC93306-209U0 STD. ROT REC93332-00048 C.ROT
FL200C ETX	2006	2006	REC93311-83280	REC93317-330U2				REC93332-000W1		REC93306-209U0 STD. ROT REC93332-00048 C.ROT
L200A	1988	1989	REC93311-928U5	REC93317-330U2 AGUJAS / NEEDLE / SPILLI REC93341-930U2 AXIAL / ASSIALE		REC93315-430U8	REC93315-425V3	REC93390-000U2	REC93315-430V5	REC93332-00048
L200B	1990	1994	REC93311-928U5	REC93317-330U2 AGUJAS / NEEDLE / SPILLI REC93341-930U2 AXIAL / ASSIALE			REC93315-425V3	REC93332-000V3 STD. ROT REC93390-000U2 C.ROT	REC93315-430V5	REC93306-209U0
L200F	1996	1998	REC93311-928U5	REC93315-430V5 AGUJAS / NEEDLE / SPILLI REC93341-930V2 AXIAL / ASSIALE		REC93315-430U8	REC93315-425V3	REC93332-000V3 STD. ROT REC93390-000U2 C.ROT.		REC93306-209U0 STD. ROT REC93332-00048 C.ROT
L200F ETO	2000	2000	REC93311-928U5	REC93317-330U2 AGUJAS / NEEDLE / SPILLI REC93341-930V2 AXIAL / ASSIALE		REC93315-430U8	REC93315-425V3	REC93332-000V3 STD. ROT REC93390-000U2 C.ROT.		REC93306-209U0 STD. ROT REC93332-00048 C.ROT.
L200F ETOL	2001	2006	REC93311-928U5	REC93317-330U2 AGUJAS / NEEDLE / SPILLI REC93341-930V2 AXIAL / ASSIALE		REC93315-43061	REC93315-425V3	REC93332-000V3 STD. ROT REC93390-000U2 C.ROT.		REC93306-209U0 STD. ROT REC93332-00048 C.ROT.
L200F ETOX	2001	2001	REC93311-928U5	REC93317-330U2		REC93315-430U8	REC93315-425V3	REC93332-000V3 STD. ROT REC93390-000U2 C.ROT.		REC93306-209U0 STD. ROT REC93332-00048 C.ROT.
LZ200N	2000	2000						REC93390-000U2		REC93390-000U2
LZ200N ETO	2000	2000	REC93311-928U5	REC93317-330U2		REC93315-430U8	REC93315-425V3	REC93332-000V3		REC93306-209U0 STD. ROT REC93332-00048 C.ROT.
LZ200N ETOX	2001	2007	REC93311-928U5	REC93317-330U2 AGUJAS / NEEDLE / SPILLI REC93341-930V2 AXIAL / ASSIALE		REC93315-43061	REC93315-425V3	REC93332-000V3 STD. ROT REC93390-000U2 C.ROT.		REC93306-209U0 STD. ROT REC93332-00048 C.ROT.
LZ200T R	2005	2005						REC93390-000U2		REC93390-000U2
LZ200T XRC	2004	2006						REC93390-000U2		REC93390-000U2
LZ200T XRD	2005	2005						REC93390-000U2		REC93390-000U2
Z200N ETO	2000	2000	REC93311-928U5	REC93317-330U2 AGUJAS / NEEDLE / SPILLI REC93341-930V2 AXIAL / ASSIALE		REC93315-430U8	REC93315-425V3	REC93332-000V3		REC93306-209U0 STD. ROT REC93332-00048 C.ROT.
Z200N ETOL	2001	2006	REC93311-928U5	REC93317-330U2 AGUJAS / NEEDLE / SPILLI REC93341-930V2 AXIAL / ASSIALE		REC93315-43061	REC93315-425V3	REC93332-000V3 STD. ROT REC93390-000U2 C.ROT.		REC93306-209U0 STD. ROT REC93332-00048 C.ROT.
Z200N ETOX	2001	2006	REC93311-928U5	REC93317-330U2 AGUJAS / NEEDLE / SPILLI REC93341-930V2 AXIAL / ASSIALE		REC93315-43061	REC93315-425V3	REC93332-000V3 STD. ROT REC93390-000U2 C.ROT.		REC93306-209U0 STD. ROT REC93332-00048 C.ROT.
Z200P ETOL	2003	2006	REC93311-928U5	REC93317-330U2 AGUJAS / NEEDLE / SPILLI REC93341-930V2 AXIAL / ASSIALE		REC93315-43061	REC93315-425V3	REC93332-000V3		REC93306-209U0
220A	1984	1986	REC93311-928U5	REC93317-330U2 AGUJAS / NEEDLE / SPILLI REC93341-930U2 AXIAL / ASSIALE		REC93315-430U8	REC93315-425V3	REC93332-000V3		REC93306-209U0
225A	1987	1989	REC93311-928U5	REC93317-330U2 AGUJAS / NEEDLE / SPILLI REC93341-930U2 AXIAL / ASSIALE		REC93315-430U8	REC93315-425V3			REC93306-209U0
225B	1990	1994	REC93311-928U5	REC93317-330U2 AGUJAS / NEEDLE / SPILLI REC93341-930U2 AXIAL / ASSIALE		REC93315-430U8	REC93315-425V3	REC93332-000V3		REC93306-209U0
225B	1995	1995	REC93311-928U5	REC93315-430V5			REC93315-425V3	REC93332-000V3		REC93306-209U0

MODELO MODEL MODELLO	DESDE FROM DELL' ANNO	HASTA TO ALL' ANNO	AGUJA EJE COLA CYLIND. DRIVE SHAFT CUSCINETTO INF. ASSE VERT.	RODILLOS EJE VERT. ROLL BEAR DRIVE SHAFT CUS. INTERNO ASSE VERTICALE	PIÑÓN ATAQUE ROLL. BEARING GEAR CUS. PIGNONE INNESTO	AGUJAS DIÁBOLO CYL. CARRIER CUS. RULLI PER COP. CASSA INGRANAGGI	AGUJAS M. AVAN CYL. GEAR FW CUS. A RULLI PIG. M. AVANTI	ROD. PIÑÓN M. AVAN. ROLL BEAR GEAR FW CUS. CONICI PIG. M. AVANTI	AGUJAS M. ATRÁS CYL. GEAR R.V. CUS. CONICI PIG. M. INDIETRO	PIÑÓN M. ATRÁS BALLS GEAR R.V. CUS. PIGNONE M. INDIETRO
225C	1994	1994	REC93311-83280	REC93317-330U2		REC93315-430U8		REC93332-000W1		REC93306-210U0
225C	1995	1995	REC93311-83280	REC93315-430V5						
225D	1996	1998	REC93311-928U5	REC93315-430V5 AGUJAS / NEEDLE / SPILLI REC93341-930V2 AXIAL / ASSIALE		REC93315-430U8	REC93315-425V3	REC93332-000V3		REC93306-209U0
225D ETO	2000	2000	REC93311-928U5	REC93317-330U2 AGUJAS / NEEDLE / SPILLI REC93341-930V2 AXIAL / ASSIALE		REC93315-430U8	REC93315-425V3	REC93332-000V3		REC93306-209U0
225D ETOL	2001	2003	REC93311-928U5	REC93317-330U2 AGUJAS / NEEDLE / SPILLI REC93341-930V2 AXIAL / ASSIALE		REC93315-430U8	REC93315-425V3	REC93332-000V3		REC93306-209U0
225D ETOX	2001	2003	REC93311-928U5	REC93317-330U2 AGUJAS / NEEDLE / SPILLI REC93341-930V2 AXIAL / ASSIALE		REC93315-430U8	REC93315-425V3	REC93332-000V3		REC93306-209U0
225G	1999	1999	REC93311-83280	REC93317-330U2		REC93330-43061		REC93332-000W1		REC93306-210U0
225G ETO	2000	2000	REC93311-83280	REC93317-330U2		REC93330-43061		REC93332-000W1		REC93306-210U0
225G ETOL	2001	2003	REC93311-928U5	REC93317-330U2		REC93330-43061		REC93332-000W1		REC93306-210U0
F225A ETU	2003	2006		REC93317-330U2		REC93315-43061		REC93332-000W1		REC93306-209U0 STD. ROT REC93332-00048 C.ROT.
F225A ETX	2002	2006	REC93311-83280	REC93317-330U2		REC93315-43061		REC93332-000W1		REC93306-209U0 STD. ROT REC93332-00048 C.ROT.
FL225A ETX	2002	2006	REC93311-83280	REC93317-330U2		REC93315-43061		REC93332-000W1		REC93306-209U0 STD. ROT REC93332-00048 C.ROT.
L225C	1994	1994	REC93311-83280	REC93317-330U2		REC93315-430U8		REC93332-000W1		REC93306-210U0
L225C	1995	1995	REC93311-83280	REC93315-430V5				REC93332-000W1		REC93306-210U0
250A	1990	1994	REC93311-83280	REC93317-330U2		REC93315-430U8		REC93332-000W1		REC93306-210U0
250A	1995	1998	REC93311-83280	REC93315-430V5				REC93332-000W1		REC93306-210U0
250A ETO	2000	2000	REC93311-83280	REC93317-330U2		REC93315-430U8		REC93332-000W1		REC93306-210U0
250A ETOX	2001	2006	REC93311-83280	REC93317-330U2		REC93315-43061		REC93332-000W1		REC93306-210U0
250B	1997	1998	REC93311-83280	REC93317-330U2		REC93315-430U8		REC93332-000W1		REC93306-210U0
250B ETO	2000	2000	REC93311-83280	REC93317-330U2		REC93315-430U8		REC93332-000W1		REC93306-210U0
250B ETOX	2001	2003	REC93311-83280	REC93317-330U2		REC93315-430U8		REC93332-000W1		REC93306-210U0
250G ETOX	2006	2006	REC93311-83280	REC93317-330U2		REC93315-43061		REC93332-000W1		REC93306-210U0
F250A ETU	2006	2006	REC93311-83280	REC93317-330U2				REC93332-000W1		REC93306-210U0
F250A ETX	2006	2006	REC93311-83280	REC93317-330U2				REC93332-000W1		REC93306-209U0 STD. ROT REC93332-00048 C.ROT.
FL250A ETU	2006	2006	REC93311-83280	REC93317-330U2				REC93332-000W1		REC93306-209U0 STD. ROT REC93332-00048 C.ROT.
FL250A ETX	2006	2006	REC93311-83280	REC93317-330U2				REC93332-000W1		REC93306-209U0 STD. ROT REC93332-00048 C.ROT.
L250A	1990	1994	REC93311-83280	REC93317-330U2		REC93315-430U8		REC93332-000W1	REC93315-430U8	REC93315-430U8
L250A	1995	1998	REC93311-83280	REC93315-430V5				REC93332-000W1		REC93306-210U0
L250A ETO	2000	2000	REC93311-83280	REC93317-330U2		REC93315-430U8		REC93332-000W1		REC93306-210U0
L250A ETOX	2001	2006	REC93311-83280	REC93317-330U2		REC93315-43061		REC93332-000W1		REC93306-210U0
L250B	1997	1998	REC93311-83280	REC93317-330U2		REC93315-430U8		REC93332-000W1		REC93306-210U0
L250B ETO	2000	2000	REC93311-83280	REC93317-330U2		REC93315-430U8		REC93332-000W1		REC93306-210U0
L250B ETOX	2001	2003	REC93311-83280	REC93317-330U2		REC93315-430U8		REC93332-000W1		REC93306-210U0
L250G ETOX	2006	2006	REC93311-83280	REC93317-330U2		REC93315-43061		REC93332-000W1		REC93306-210U0
LZ250D EOX	2003	2006	REC93311-83280	REC93317-330U2		REC93315-43061		REC93332-000W1		REC93306-209U0 STD. ROT REC93332-00048 C.ROT.
Z250D ETOU	2003	2003	REC93311-83280	REC93317-330U2		REC93315-43061		REC93332-000W1		REC93306-209U0 STD. ROT REC93332-00048 C.ROT.
Z250D ETOX	2003	2006	REC93311-83280	REC93317-330U2		REC93315-43061		REC93332-000W1		REC93306-209U0 STD. ROT REC93332-00048 C.ROT.
Z250F ETOL	2003	2006	REC93311-83280	REC93317-330U2		REC93315-43061		REC93332-000W1		REC93315-43061
LZ300A ETOX Z300A ETOU Z300A ETOX	2004	2006	REC93311-83280	REC93317-330U2				REC93332-000W1		REC93306-209U0 STD. ROT REC93332-00048 C.ROT.

GUÍA BOMBAS AGUA
WATER PUMP GUIDE
GUIDA POMPA ACQUA

4 TIEMPOS STROKES

MODELO MODEL MODELLO	DESDE FROM DELL' ANNO	IMPULSOR IMPELLER GIRANTE	ACOPLE INOX. CUP BOCCOLA INOC	TAPA BOMBA PLATE PIASTRA POMPA	CUERPO BOMBA HOUSING CORPO POMPA	JUNTA GASKET GUARNIZIONE	RETÉN TUBO FLECTOR TENUTA	CHAVETA KEY CHIAVETA	KIT REP. BOMBA WATER PUMP KIT KIT RICAMBI
F2.5	2003 +	REC6L5-44352-00	PAF2.6-03000015	PAF2.6-03000010	PAF2.6-03000014	PAJASO F404-19-033	PAF4-03000021	PAF2.6-03000013	
F4	2002-2009	REC6E0-44352-00	REC6E0-44322-02	PAF4-03000015	PAF4-03000019	PAF4-03000018	PAF4-03000021	PAF4-03000016	
F5	2010+	REC6E0-44352-00	PAF6-03000002		PAF6-03000001		PAF4-03000021	PAF4-03000016	
F6 / 2CYL	2000-2009	REC68T-44352-00	REC63V-44322-00	REC68T-44323-00	REC63V-44301-00	REC93210-44398	REC68T-44366-00	REC664-44338-00	REC68T-W0078-00
F6 / 1CYL	2010 +	REC6E0-44352-00	PAF6-03000002		PAF6-03000001	PAF4-03000018	PAF4-03000021	PAF4-03000016	
F8	2001 +	REC68T-44352-00	REC63V-44322-00	REC68T-44323-00	REC63V-44301-00	REC93210-44398	REC68T-44366-00	REC664-44338-00	REC68T-W0078-00
T8	2001-2010	REC63V-44352-01	REC63V-44322-00	REC68T-44323-00	REC63V-44301-00	REC93210-44398	REC68T-44366-00	REC664-44338-00	
F9.9	1985-2004	REC682-44352-01	REC682-44322-00	REC682-44323-40	REC682-44300-01	REC682-44315-00	REC682-44365-00	REC90280-03024	
F9.9	2005-2006	REC63V-44352-01	REC63V-44322-00	REC63V-44323-00	REC63V-44301-00	REC93210-44398	PAF15-06060004	REC664-44338-00	REC63V-W0078-01
F9.9	2007 +	REC63V-44352-01	REC63V-44322-00	REC68T-44323-00	REC63V-44301-00	REC93210-44398	REC68T-44366-00	REC664-44338-00	REC68T-W0078-00
FT9.9	1985-1999	REC682-44352-01	REC682-44322-00	REC682-44323-40	REC682-44300-01	REC682-44315-00	REC682-44365-00	REC90280-03024	
T9.9	1991-1999	REC682-44352-01	REC682-44322-00	REC682-44323-40	REC682-44300-01	REC682-44315-00	REC682-44365-00	REC90280-03024	
T9.9	2005-2006	REC63V-44352-01	REC63V-44322-00	REC63V-44323-00	REC63V-44301-00	REC93210-44398	PAF15-06060004	REC664-44338-00	REC63V-W0078-01
F15	1998-2005	REC63V-44352-01	REC63V-44322-00	REC63V-44323-00	REC63V-44301-00	REC93210-44398	PAF15-06060004	REC664-44338-00	REC63V-W0078-01
F15	2006-2011	REC63V-44352-01	REC63V-44322-00	REC68T-44323-00		REC93210-49046	GLM38304	REC664-44338-00	
F20/F25	1998-05,09-11	REC6H4-44352-02	REC61N-44322-00	REC61N-44323-00	PAF25-04050001	PAF25-04050003	PAF25-04050004	REC90280-03024	REC61N-W0078-11
T25	2001-06,2009	REC6H4-44352-02	REC63D-44322-00	REC66T-44323-00	REC66T-44311-00	REC93210-59MG7		REC90280-03M03	REC66T-W0078-00
F30	2001-2005	REC6H4-44352-02	REC63D-44322-00	REC66T-44323-00	REC66T-44311-00	REC93210-59MG7		REC90280-03M03	REC66T-W0078-00
F40	1999	REC6H3-44352-00	REC63D-44322-00	GLM12524	REC63D-44311-00	REC93210-59MG7		REC90280-03024	GLM12276
F40	2000-2008	REC6H4-44352-02	REC63D-44322-00	REC66T-44323-00	REC66T-44311-00	REC93210-59MG7		REC90280-03M03	REC66T-W0078-00
F45	1996+	REC6H3-44352-00	REC63D-44322-00	GLM12524	REC63D-44311-00	REC93210-59MG7		REC90280-03024	GLM12276
F50	1995-2009	REC6H3-44352-00	REC63D-44322-00	GLM12524	REC63D-44311-00	REC93210-59MG7		REC90280-03024	GLM12276
T50	1996+	REC6H3-44352-00	REC663-44322-00	REC6H3-44323-00	REC6H3-44311-00	REC6H3-44315-00		REC90280-03024	GLM12283
F60	2002-2009	REC6H3-44352-00	REC63D-44322-00	GLM12524	REC6H3-44311-00	REC6H3-44315-00		REC90280-03M03	GLM12276
T60	2003-2011	REC6H3-44352-00	REC663-44322-00	REC6H3-44323-00	REC6H3-44311-00	REC6H3-44315-00		REC90280-03M03	GLM12283
F75	2003-2011	REC67F-44352-00	GLM12872	GLM12523	REC67F-44311-01	REC688-44315-00		REC90280-04M04	GLM12275
F80	1999-2003	REC67F-44352-00	GLM12872	GLM12523	REC67F-44311-01	REC688-44315-00		REC90280-04M04	GLM12275
F90	2003-2011	REC67F-44352-00	GLM12872	GLM12523	REC67F-44311-01	REC688-44315-00		REC90280-04M04	GLM12275
F100	1999-2003	REC67F-44352-00	GLM12872	GLM12523	REC67F-44311-01	REC688-44315-00		REC90280-04M04	GLM12275
F115/FL115	2000+	REC6E5-44352-01	REC61A-44322-02	REC68V-44323-00	REC61A-44311-00	REC93210-86M38		REC90280-04M05	GLM12067
F150/FL150	2004-2012	REC6E5-44352-01	REC61A-44322-02	REC6G5-44323-00	REC61A-44311-00	REC93310-86M38	GLM38300	REC90280-04M05	REC61A-W0078-A2
F200/FL200	2002-2011	REC6E5-44352-01	REC61A-44322-02	REC6G5-44323-00	REC61A-44311-00	REC93310-86M38	GLM38300	REC90280-04M05	REC61A-W0078-A2
VF200	2009-2011	REC6E5-44352-01	REC61A-44322-02		REC61A-44311-00	REC93210-86M38	GLM38300	GLM89585	
F225/FL225	2002-2010	REC6E5-44352-01	REC61A-44322-02	REC6G5-44323-00	REC61A-44311-00	REC93310-86M38	GLM38300	REC90280-04M05	REC61A-W0078-A2
F225/FL225	2007-2009 (20´´)	REC6E5-44352-01	REC61A-44322-02	REC6P2-44323-00	REC61A-44311-00	REC93210-86M38	GLM38300	REC90280-04M05	REC6P2-W0078-00
VF225	2009-2011	REC6E5-44352-01	REC61A-44322-02		REC61A-44311-00	REC93210-86M38	GLM38300	GLM89585	
F250/FL250	2005	REC6E5-44352-01	REC61A-44322-02	REC6G5-44323-00	REC61A-44311-00	REC93210-86M38	GLM38300	REC90280-04M05	REC61A-W0078-A2
F250/FL250	2006-2011	REC6E5-44352-01	REC61A-44322-02	REC6P2-44323-00	REC61A-44311-00	REC93210-86M38	GLM38300	REC90280-04M05	REC6P2-W0078-00
VF250	2009-2010	REC6E5-44352-01	REC61A-44322-02		REC61A-44311-00	REC93210-86M38	GLM38300	REC90280-04M05	
F300/FL300	2007-2011	CEF500389N							
F350/LF350	2007+	CEF500389N							

GUÍA BOMBAS AGUA
WATER PUMP GUIDE
GUIDA POMPA ACQUA

2 TIEMPOS STROKES

MODELO MODEL MODELLO	DESDE FROM DELL'ANNO	IMPULSOR IMPELLER GIRANTE	ACOPLE INOX. CUP BOCCOLA INOC	TAPA BOMBA PLATE PIASTRA POMPA	CUERPO BOMBA HOUSING CORPO POMPA	JUNTA GASKET GUARNIZIONE	RETÉN TUBO FLECTOR TENUTA	CHAVETA KEY CHIAVETA	KIT REP. BOMBA WATER PUMP KIT KIT RICAMBI
2	1984-87	REC646-44352-01		REC646-44323-00					REC6A1-W0078-01
2	1988 +	REC646-44352-01		REC646-44323-00					
4	1984-99	REC6E0-44352-00	REC6E0-44322-02	PAF4-03000015			PAF4-03000021		
5	1984-02	REC6E0-44352-00	REC6E0-44322-02	PAF4-03000015			PAF4-03000021		
6	1986-00	REC6G1-44352-00	REC6G1-44322-00	REC6G1-44323-00		REC6G1-44315-A0	REC647-44366-00	REC90280-03024	REC6G1-W0078-A1
8	1984-09	REC6G1-44352-00	REC6G1-44322-00	REC6G1-44323-00		REC6G1-44315-A0	REC647-44366-00	REC90280-03024	REC6G1-W0078-A1
9.9 D	1984-95	REC682-44351-01	REC682-44322-00	REC682-44323-40	REC682-44300-01	REC682-44315-00	REC682-44365-00	REC90280-03024	REC682-W0078-A1
9.9	1996-09	REC63V-44352-01	REC63V-44322-00	REC63V-44323-00	REC63V-44301-00	REC93210-44398	REC647-44366-00	REC664-44338-00	GLM12066
15 D	1984-95	REC682-44351-01	REC682-44322-00	REC682-44323-40	REC682-44300-01	REC682-44315-00	REC682-44365-00	REC90280-03024	REC682-W0078-A1
15	1996-09	REC63V-44352-01	REC63V-44322-00	REC63V-44323-00	REC63V-44301-00	REC93210-44398	REC647-44366-00	REC664-44338-00	GLM12066
20	1996-97	REC6L2-44352-00	GLM12866	GLM12508	GLM12455	GLM84310	GLM38304	PAF25-04000015	GLM12277
25	1984-85	REC689-44352-02	REC689-W4432-01	REC689-44323-00	GLM12076	GLM38109	GLM38305	GLM89589	GLM12058
25	1986-87	REC689-44352-02	REC689-W4432-01	REC689-44323-00	GLM12076	GLM38109	GLM38305	REC664-44338-00	GLM12059
25(2 CYL)	1988-09	REC6L2-44352-00	GLM12866	GLM12508	GLM12455	GLM84310	GLM38304	PAF25-04000015	GLM12277
25(3 CYL)	1996-02	REC6H4-44352-02	REC663-44322-00	REC663-44323-00	REC663-44311-00	REC663-44315-A0	REC663-44366-00	REC90280-03024	GLM12285
25J	1987-1994	REC6H4-44352-02	REC663-44322-00	REC663-44323-00	REC663-44311-00	REC663-44315-A0	REC663-44366-00	REC90280-03024	
C25	1990-97	REC689-44352-02	REC689-W4432-01	REC689-44323-00	GLM12076	GLM38109	GLM38305	REC664-44338-00	GLM12059
CV25	1990	REC689-44352-02	REC689-W4432-01	REC689-44323-00	GLM12076	GLM38109	GLM38305	REC664-44338-00	GLM12059
30	1984-85	REC689-44352-02	REC689-W4432-01	REC689-44323-00	GLM12076	GLM38109	GLM38305	GLM89589	GLM12058
30	1986	REC689-44352-02	REC689-W4432-01	REC689-44323-00	GLM12076	GLM38109	GLM38305	REC664-44338-00	GLM12059

MODELO MODEL MODELLO	DESDE FROM DELL'ANNO	IMPULSOR IMPELLER GIRANTE	ACOPLE INOX. CUP BOCCOLA INOC	TAPA BOMBA PLATE PIASTRA POMPA	CUERPO BOMBA HOUSING CORPO POMPA	JUNTA GASKET GUARNIZIONE	RETÉN TUBO FLECTOR TENUTA	CHAVETA KEY CHIAVETA	KIT REP. BOMBA WATER PUMP KIT KIT RICAMBI
30D	1986-94	REC6H4-44352-02	REC663-44322-00	REC663-44323-00	REC663-44311-00	REC663-44315-A0	REC663-44366-00	REC90280-03024	
30	1987-01	REC6H4-44352-02	REC663-44322-00	REC663-44323-00	REC663-44311-00	REC663-44315-A0	REC663-44366-00	REC90280-03024	GLM12285
C30	1990-92	REC689-44352-02	REC689-W4432-01	REC689-44323-00	GLM12076	GLM38109	GLM38305	REC664-44338-00	GLM12059
C30	1993-97	REC6H4-44352-02	REC61N-44322-00	REC61N-44323-00	PAF25-04050001	PAF25-04050003	PAF25-04050004	REC90280-03024	REC61N-W0078-11
40	1984-87	REC6H4-44352-02	REC663-44322-00	REC663-44323-00	REC663-44311-00	REC663-44315-A0	REC663-44366-00	REC90280-03024	GLM12064
40	1988-94	REC6H4-44352-02	REC663-44322-00	REC663-44323-00	GLM12452	REC663-44315-A0	REC663-44366-00	REC90280-03024	GLM12064
40	1995-05	REC6H3-44352-00	REC63D-44322-00	GLM12524	REC63D-44311-01	REC93210-59MG7	REC663-44366-00	REC90280-03024	GLM12276
C40	1990-91	REC6F5-44352-00	REC676-44322-00	REC676-44323-00	REC676-44311-00	REC676-44315-00	REC663-44366-00	REC90280-04M00	REC6F5-W0078-A0
C40	1992-97	REC6F5-44352-00	REC676-44322-00	REC676-44323-00	REC676-44311-00	REC676-44315-00	REC663-44366-00	REC90280-04M00	REC679-W0078-A1
C40	1997-03	REC6H3-44352-00	REC63D-44322-00	GLM12524	REC63D-44311-01	REC93210-59MG7	REC663-44366-00	REC90280-03024	GLM12276
P40	1998	REC6H3-44352-00	REC63D-44322-00	GLM12524	REC63D-44311-01	REC93210-59MG7	REC663-44366-00	REC90280-03024	GLM12276
50	1984-87	REC6H4-44352-02	REC663-44322-00	REC663-44323-00	REC663-44311-00	REC663-44315-A0	REC663-44366-00	REC90280-03024	GLM12064
50	1988-94	REC6H4-44352-02	REC663-44322-00	REC663-44323-00	REC663-44311-00	REC663-44315-A0	REC663-44366-00	REC90280-03024	GLM12064
50	1995-09	REC6H3-44352-00	REC63D-44322-00	GLM12524	REC63D-44311-01	REC93210-59MG7	REC663-44366-00	REC90280-03024	GLM12276
C50	1998-01	REC6H3-44352-00	REC63D-44322-00	GLM12524	REC63D-44311-01	REC93210-59MG7	REC663-44366-00	REC90280-03024	GLM12276
PRO 50	1987	REC6H4-44352-02	REC663-44322-00	REC663-44323-00	REC663-44311-00	REC663-44315-A0	REC663-44366-00	REC90280-03024	GLM12064
PRO 50	1988-90	REC6H4-44352-02	REC663-44322-00	REC663-44323-00	REC663-44311-00	REC663-44315-A0	REC663-44366-00	REC90280-03024	GLM12064
P50	1991-93	REC6H4-44352-02	REC663-44322-00	REC663-44323-00	REC663-44311-00	REC663-44315-A0	REC663-44366-00	REC90280-03024	GLM12064
P50	1995-96	REC6H3-44352-00	REC689-W4432-01	GLM12524	REC63D-44311-01	REC93210-59MG7	REC663-44366-00	REC90280-03024	GLM12276
C55	1991-94	REC6H3-44352-00	REC663-44322-00	REC663-44323-00	REC663-44311-00	REC663-44315-A0	REC663-44366-00	REC90280-03M03	REC663-W0078-01
CV55	1989	REC6H3-44352-00	REC663-44322-00	REC663-44323-00	REC663-44311-00	REC663-44315-A0	REC663-44366-00	REC90280-03M03	REC663-W0078-01
60	2001-03	REC6H3-44352-00	REC663-44322-00	REC6H3-44323-00	GLM12447	REC6H3-44315-00	REC663-44366-00	REC90280-03M03	GLM12283
60	2004-05	REC688-44352-03	REC688-44322-00	REC688-44323-00	REC688-44311-01	REC688-44315-00	REC663-44366-00	REC90280-04M04	REC692-W0078-02
C60	1996-01	REC6H3-44352-00	REC663-44322-00	REC6H3-44323-00	GLM12447	REC6H3-44315-00	REC663-44366-00	REC90280-03M03	GLM12283
E60	1995-96	REC6H3-44352-00	REC663-44322-00	REC6H3-44323-00	GLM12447	REC6H3-44315-00	REC663-44366-00	REC90280-03M03	GLM12283
E60	1997-00	REC6H3-44352-00		REC6H3-44323-00	GLM12447	REC6H3-44315-00	REC663-44366-00	REC90280-03M03	REC6K5-W0078-01
P60	1991	REC6H3-44352-00	REC663-44322-00	REC6H3-44323-00	GLM12447	REC6H3-44315-00	REC663-44366-00	REC90280-03M03	GLM12283
P60	1992-99	REC6H3-44352-00	REC663-44322-00	REC6H3-44323-00	GLM12447	REC6H3-44315-00	REC663-44366-00	REC90280-03M03	GLM12283
70	1984-91	REC6H3-44352-00	REC663-44322-00	REC6H3-44323-00	GLM12447	REC6H3-44315-00	REC663-44366-00	REC90280-03M03	GLM12283
70	1992-03	REC6H3-44352-00	REC663-44322-00	REC6H3-44323-00	GLM12447	REC6H3-44315-00	REC663-44366-00	REC90280-03M03	GLM12283
70	2004-09	REC688-44352-03	REC688-44322-00	REC688-44323-00	REC688-44311-01	REC688-44315-00	REC663-44366-00	REC90280-04M04	REC692-W0078-02
C70	2000-01	REC6H3-44352-00	REC663-44322-00	REC6H3-44323-00	GLM12447	REC6H3-44315-00	REC663-44366-00	REC90280-03M03	GLM12283
C75	1994-99	REC688-44352-03	REC688-44322-00	REC688-44323-00	REC688-44311-01	REC688-44315-00	REC663-44366-00	REC90280-04M04	REC692-W0078-02
E75	1995-00	REC688-44352-03		REC688-44323-00	REC688-44311-01	REC688-44315-00	REC663-44366-00	REC90280-04M04	REC692-W0078-02
P75	1996-99	REC688-44352-03	REC688-44322-00	REC688-44323-00	REC688-44311-01	REC688-44315-00	REC663-44366-00	REC90280-04M04	REC692-W0078-02
C80	1997	REC688-44352-03	REC688-44322-00	REC688-44323-00	REC688-44311-01	REC688-44315-00	REC663-44366-00	REC90280-04M04	REC692-W0078-02
C85	1989-97	REC688-44352-03	REC688-44322-00	REC688-44323-00	REC688-44311-01	REC688-44315-00	REC663-44366-00	REC90280-04M04	REC692-W0078-02
CV85	1989-91	REC688-44352-03	REC688-44322-00	REC688-44323-00	REC688-44311-01	REC688-44315-00	REC663-44366-00	REC90280-04M04	REC692-W0078-02
90	1984-09	REC688-44352-03	REC688-44322-00	REC688-44323-00	REC688-44311-01	REC688-44315-00	REC663-44366-00	REC90280-04M04	REC692-W0078-02
B90	1997-99	REC688-44352-03	REC688-44322-00	REC688-44323-00	REC688-44311-01	REC688-44315-00	REC663-44366-00	REC90280-04M04	REC692-W0078-02
C90	1997-01	REC688-44352-03	REC688-44322-00	REC688-44323-00	REC688-44311-01	REC688-44315-00	REC663-44366-00	REC90280-04M04	REC692-W0078-02
C115	1991-92	REC6E5-44352-01	REC6E5-44322-00	REC6E5-44323-00	REC6E5-44311-00	REC93210-86M38	GLM38301	REC90280-04M05	REC6N6-W0078-02
C115	1993-96	REC6E5-44352-01	REC61A-44322-02	REC6E5-44323-00	REC61A-44311-00	REC93210-86M38	GLM38301	REC90280-04M05	REC6N6-W0078-02
C115	1997-00	REC6E5-44352-01	REC61A-44322-02	REC6E5-44323-00	REC61A-44311-00	REC93210-86M38	GLM38301	REC90280-04M05	REC6N6-W0078-02
P115 (62A)	1993-96	REC6E5-44352-01	REC61A-44322-02	REC6E5-44323-00	REC61A-44311-00	REC93210-86M38	GLM38301	REC90280-04M05	REC6N6-W0078-02
115 (6N6/6E5)	1984-94	REC6E5-44352-01	REC61A-44322-02	REC6E5-44323-00	REC6E5-44311-00	REC93210-86M38	GLM38301	REC90280-04M05	REC6N6-W0078-02
115 (6N6)	1994	REC6E5-44352-01	REC61A-44322-02	REC6E5-44323-00	REC61A-44311-00	REC93210-86M38	GLM38301	REC90280-04M05	REC6N6-W0078-02
130 (6L1/6N7)	1988-92	REC6E5-44352-01	REC6E5-44322-00	REC6E5-44323-00	REC6E5-44311-00	REC93210-86M38	GLM38301	REC90280-04M05	REC6N6-W0078-02
130 (6N7)	1993-96	REC6E5-44352-01	REC61A-44322-02	REC6E5-44323-00	REC61A-44311-00	REC93210-86M38	GLM38301	REC90280-04M05	REC6N6-W0078-02
130 / L130	1997-01	REC6E5-44352-01	REC61A-44322-02	REC6E5-44323-00	REC61A-44311-00	REC93210-86M38	GLM38301	REC90280-04M05	REC6N6-W0078-02
130	2002-04	REC6E5-44352-01	REC61A-44322-02	REC6E5-44323-00	REC61A-44311-00	REC93210-86M38	GLM38301	REC90280-04M05	REC6N6-W0078-02
L130 (6L6/6N4)	1989-92	REC6E5-44352-01	REC6E5-44322-00	REC6E5-44323-00	REC6E5-44311-00	REC93210-86M38	GLM38301	REC90280-04M05	REC6N6-W0078-02
L130 (6N4)	1993-96	REC6E5-44352-01	REC61A-44322-02	REC6E5-44323-00	REC61A-44311-00	REC93210-86M38	GLM38301	REC90280-04M05	REC6N6-W0078-02
C150 (6E5)	1996-99	REC6E5-44352-01	REC61A-44322-02	REC6G5-44323-00	REC61A-44311-00	REC93210-86M38	GLM38301	REC90280-04M05	REC61A-W0078-A1
D150H	1999-2002	REC6E5-44352-01	REC61A-44322-02	GLM12521	REC61A-44311-00	REC93210-86M38	GLM38301	REC90280-04M05	GLM12075
150 (6R2/6G4)	1984-91	REC6E5-44352-01	REC6E5-44322-00	REC6E5-44323-00	REC6E5-44311-00	REC93210-86M38	GLM38301	REC90280-04M05	REC6G5-W0078-A1
150 (6R2)	1992-09	REC6E5-44352-01	REC61A-44322-02	REC6G5-44323-00	REC61A-44311-00	REC93210-86M38	GLM38301	REC90280-04M05	REC61A-W0078-A1
L150 (6R0/6K0)	1986-91	REC6E5-44352-01	REC6E5-44322-00	REC6E5-44323-00	REC6E5-44311-00	REC93210-86M38	GLM38301	REC90280-04M05	REC6G5-W0078-A1
L150 (6R0)	1992-99	REC6E5-44352-01	REC61A-44322-02	REC6G5-44323-00	REC61A-44311-00	REC93210-86M38	GLM38301	REC90280-04M05	REC61A-W0078-A1
P150	1986-91	REC6E5-44352-01	REC6E5-44322-00	REC6E5-44323-00	REC6E5-44311-00	REC93210-86M38	GLM38301	REC90280-04M05	REC6G5-W0078-A1
P150	1992-99	REC6E5-44352-01	REC61A-44322-02	REC6G5-44323-00	REC61A-44311-00	REC93210-86M38	GLM38301	REC90280-04M05	REC61A-W0078-A1
150/175/ 200ETLN	1984	REC6E5-44352-01	REC6E5-44322-00	REC6E5-44323-00	REC6E5-44311-00	REC93210-86M38	GLM38301	REC90280-04M05	REC6G5-W0078-A1
PRO V150 (6J9)	1986-89	REC6E5-44352-01	REC6E5-44322-00	REC6E5-44323-00	REC6E5-44311-00	REC93210-86M38	GLM38301	REC90280-04M05	REC6G5-W0078-A1
PRO V150 (6N9)	1990	REC6E5-44352-01	REC6E5-44322-00	REC6E5-44323-00	REC6E5-44311-00	REC93210-86M38	GLM38301	REC90280-04M05	REC6G5-W0078-A1
PX150	1999	REC6E5-44352-01	REC61A-44322-02	REC6G5-44323-00	REC61A-44311-00	REC93210-86M38	GLM38301	REC90280-04M05	REC61A-W0078-A1
SX150	1999-04	REC6E5-44352-01	REC61A-44322-02	REC6G5-44323-00	REC61A-44311-00	REC93210-86M38	GLM38301	REC90280-04M05	REC61A-W0078-A1
V150	2000-08	REC6E5-44352-01	REC61A-44322-02	REC6G5-44323-00	REC61A-44311-00	REC93210-86M38	GLM38301	REC90280-04M05	REC61A-W0078-A1
VZ150	2001-09	REC6E5-44352-01	REC61A-44322-02	REC6G5-44323-00	REC61A-44311-00	REC93210-86M38	GLM38301	REC90280-04M05	REC61A-W0078-A1
Z150/LZ150	2001-05	REC6E5-44352-01	REC61A-44322-02	REC6G5-44323-00	REC61A-44311-00	REC93210-86M38	GLM38301	REC90280-04M05	REC61A-W0078-A1
175 (6G5)	1984-91	REC6E5-44352-01	REC6E5-44322-00	REC6E5-44323-00	REC6E5-44311-00	REC93210-86M38	GLM38301	REC90280-04M05	REC6G5-W0078-A1
175 (6R3)	1992-00	REC6E5-44352-01	REC61A-44322-02	REC6G5-44323-00	REC61A-44311-00	REC93210-86M38	GLM38301	REC90280-04M05	REC61A-W0078-A1
P175 (62H)	1994-99	REC6E5-44352-01	REC61A-44322-02	REC6G5-44323-00	REC61A-44311-00	REC93210-86M38	GLM38301	REC90280-04M05	REC61A-W0078-A1
VZ175	2001-09	REC6E5-44352-01	REC61A-44322-02	REC6G5-44323-00	REC61A-44311-00	REC93210-86M38	GLM38301	REC90280-04M05	REC61A-W0078-A1

MODELO MODEL MODELLO	DESDE FROM DELL'ANNO	IMPULSOR IMPELLER GIRANTE	ACOPLE INOX. CUP BOCCOLA INOC	TAPA BOMBA PLATE PIASTRA POMPA	CUERPO BOMBA HOUSING CORPO POMPA	JUNTA GASKET GUARNIZIONE	RETÉN TUBO FLECTOR TENUTA	CHAVETA KEY CHIAVETA	KIT REP. BOMBA WATER PUMP KIT KIT RICAMBI
Z175	2001-05	REC6E5-44352-01	REC61A-44322-02	REC6G5-44323-00	REC61A-44311-00	REC93210-86M38	GLM38301	REC90280-04M05	REC61A-W0078-A1
200 (6G6/6R4)	1984-91	REC6E5-44352-01	REC6E5-44322-00	REC6E5-44323-00	REC6E5-44311-00	REC93210-86M38	GLM38301	REC90280-04M05	REC6G5-W0078-A1
200 (6R4)	1992-99	REC6E5-44352-01	REC61A-44322-02	REC655-44323-00	REC61A-44311-00	REC93210-86M38	GLM38301	REC90280-04M05	REC61A-W0078-A1
L200 (6K1/6R1)	1986-01	REC6E5-44352-01	REC6E5-44322-00	REC6E5-44323-00	REC6E5-44311-00	REC93210-86M38	GLM38301	REC90280-04M05	REC6G5-W0078-A1
L200	1992-99	REC6E5-44352-01	REC61A-44322-02	REC6G5-44323-00	REC61A-44311-00	REC93210-86M38	GLM38301	REC90280-04M05	REC61A-W0078-A1
LX200	1999-02	REC6E5-44352-01	REC61A-44322-02	REC6G5-44323-00	REC61A-44311-00	REC93210-86M38	GLM38301	REC90280-04M05	REC61A-W0078-A1
P200	1991-99	REC6E5-44352-01	REC61A-44322-02	REC6G5-44323-00	REC61A-44311-00	REC93210-86M38	GLM38301	REC90280-04M05	REC61A-W0078-A1
SX200	1999-05	REC6E5-44352-01	REC61A-44322-02	REC6G5-44323-00	REC61A-44311-00	REC93210-86M38	GLM38301	REC90280-04M05	REC61A-W0078-A1
V200	1998-99	REC6E5-44352-01	REC61A-44322-02	REC6G5-44323-00	REC61A-44311-00	REC93210-86M38	GLM38301	REC90280-04M05	REC61A-W0078-A1
VZ200	2001-04	REC6E5-44352-01	REC61A-44322-02	REC6G5-44323-00	REC61A-44311-00	REC93210-86M38	GLM38301	REC90280-04M05	REC61A-W0078-A1
VZ200	2005-09	REC6E5-44352-01	REC61A-44322-02	GLM12519	REC61A-44311-00	REC93210-86M38	GLM38301	REC90280-04M05	REC60X-W0078-00
Z200/LZ200	2000-10	REC6E5-44352-01	REC61A-44322-02	REC6G5-44323-00	REC61A-44311-00	REC93210-86M38	GLM38301	REC90280-04M05	REC61A-W0078-A1
V6 Special (6G7)	1984-86	REC6E5-44352-01	REC6E5-44322-00	REC6E5-44323-00	REC6E5-44311-00	REC93210-86M38	GLM38301	REC90280-04M05	REC6G5-W0078-A1
V6 Excel (6K7)	1987-89	REC6E5-44352-01	REC6E5-44322-00	REC6E5-44323-00	REC6E5-44311-00	REC93210-86M38	GLM38301	REC90280-04M05	REC6G5-W0078-A1
225 (6R5)	1990-91	REC6E5-44352-01	REC6E5-44322-00	REC6E5-44323-00	REC6E5-44311-00	REC93210-86M38	GLM38301	REC90280-04M05	REC6G5-W0078-A1
225 (2.6L)	1992-97	REC6E5-44352-01	REC61A-44322-02	REC6G5-44323-00	REC61A-44311-00	REC93210-86M38	GLM38301	REC90280-04M05	REC61A-W0078-A1
225 L/S (3.1L)	1994-99	REC6E5-44352-01	REC61A-44322-02	REC6G5-44323-00	REC61A-44311-00	REC93210-86M38	GLM38301	REC90280-04M05	REC61A-W0078-A1
LX225 / SX225	2000-03	REC6E5-44352-01	REC61A-44322-02	REC6G5-44323-00	REC61A-44311-00	REC93210-86M38	GLM38301	REC90280-04M05	REC61A-W0078-A1
V225	1998-99	REC6E5-44352-01	REC61A-44322-02	REC6G5-44323-00	REC61A-44311-00	REC93210-86M38	GLM38301	REC90280-04M05	REC61A-W0078-A1
VX225	2000-04	REC6E5-44352-01	REC61A-44322-02	REC6G5-44323-00	REC61A-44311-00	REC93210-86M38	GLM38301	REC90280-04M05	REC61A-W0078-A1
VZ225	2003-09	REC6E5-44352-01	REC61A-44322-02	GLM12519	REC61A-44311-00	REC93210-86M38	GLM38301	REC90280-04M05	REC60X-W0078-00
250 / L250	1990-96	REC6E5-44352-01	REC61A-44322-02	REC6G5-44323-00	REC61A-44311-00	REC93210-86M38	GLM38301	REC90280-04M05	REC61A-W0078-A1
L250 / S250	1997-99	REC6E5-44352-01	REC61A-44322-02	REC6G5-44323-00	REC61A-44311-00	REC93210-86M38	GLM38301	REC90280-04M05	REC61A-W0078-A1
VX250	2002-04	REC6E5-44352-01	REC61A-44322-02	REC6G5-44323-00	REC61A-44311-00	REC93210-86M38	GLM38301	REC90280-04M05	REC61A-W0078-A1
VZ250	2003-09	REC6E5-44352-01	REC61A-44322-02	GLM12519	REC61A-44311-00	REC93210-86M38	GLM38301	REC90280-04M05	REC60X-W0078-00
Z300 /LZ300	2006	REC6E5-44352-01	REC61A-44322-02		REC61A-44311-00	REC93210-86M38	GLM38301	REC90280-04M05	REC61A-W0078-A1
VZ300	2004-09	REC6E5-44352-01	REC61A-44322-02	GLM12519	REC61A-44311-00	REC93210-86M38	GLM38301	REC90280-04M05	REC60X-W0078-00

CUERPOS BOMBA
WATER PUMP HOUSING
CORPI POMPA

Ref.	R.O.
PAF2.6-03000014	69M-G4311-00

MOTORES / ENGINES / MOTORI
F2.5

Ref.	R.O.
PAF4-03000019	68D-G4311-01

MOTORES / ENGINES / MOTORI
F4

Ref.	R.O.
REC63V-44301-00	63V-44301-00-00

MOTORES / ENGINES / MOTORI
F6/8/15/9.9/13.5 FMH
T8/9.9 13.5AWH
9.9F/FEM/MH/MSH/ 15F/FMH/MSH/MH

Ref.	R.O.
REC682-44300-01	682-44300-01

MOTORES / ENGINES / MOTORI
9.9D
15D
F8/F9.9
T9.9

Ref.	R.O.
GLM12076	689-44311-03

MOTORES / ENGINES / MOTORI
20C/CM
25D/DE
30A

Ref.	R.O.
REC663-44311-02	663-44311-02-00

MOTORES / ENGINES / MOTORI
25B/BETO E55CMH
40N/H/E 60FEO/FETO/FEDO
50G/GEO/GETO 60BE/BEM/BET
50D 70CE
55B/BET

Ref.	R.O.
PAF25-04050001	61N-44311-01

MOTORES / ENGINES / MOTORI
25V
30G
F20
F25

Ref.	R.O.
REC66T-44311-00	66T-44311-00

MOTORES / ENGINES / MOTORI
40X FT25
E40X-MLH T25
F30/40

Ref.	R.O.
REC63D-44311-01	63D-44311-00

MOTORES / ENGINES / MOTORI
40V/VM/VE/TLR
C40M-T
50H/HR-M/HM
F40/45/50/60

Ref.	R.O.
REC676-44311-00	676-44311-00

MOTORES / ENGINES / MOTORI
E40GM/JM
40GW/JW/G/QE/QWC

Ref.	R.O.
REC688-44311-01	688-44311-01

MOTORES / ENGINES / MOTORI
60FETO/TR
E60H-E-M
70BETO/TR
75CETO/TLR
E75B
75A/AE-T-M-D
80A/AE-O-T
85A/AE-D-T
90A/AETO/AEO/TLR

Ref.	R.O.
REC67F-44311-01	67F-44311-01-00

MOTORES / ENGINES / MOTORI
F80/100

Ref.	R.O.
REC61A-44311-00	6E5-44311-00

MOTORES / ENGINES / MOTORI
F80/100/115/150/200/225/250
150F/FET/TR/AET
Z150P/TXR
175D 200F/FETO/G/GETO
200AET
225B/DET/G
250GETO/AET
Z250DET/FET

COMPONENTES BOMBA AGUA
WATER PUMP COMPONENTS
COMPONENTI POMPA ACQUA

Ref.	R.O.
REC646-45323-00	646-44323-00

MOTORES / ENGINES / MOTORI
2B
2MSH
2BMH

Ref.	R.O.
PAF2.6-03000010	69M-G4323-00

MOTORES / ENGINES / MOTORI
F2.5

Ref.	R.O.
REC6L5-44323-00	6L5-44323-00

MOTORES / ENGINES / MOTORI
3A/AMH
3MSH

Ref.	R.O.
GLM12523	667F-44323-00

MOTORES / ENGINES / MOTORI
F75/F80/F100

Ref.	R.O.
REC68T-44323-00	68T-44323-00

MOTORES / ENGINES / MOTORI
F6
T8
F9.9
F20/6/9.9/8/13.5
T8/9.9

Ref.	R.O.
PAF15-06000007	63V-44323-00-00

MOTORES / ENGINES / MOTORI
9.9F/FMH/FEMH/MSH
F9.9/13.5/15
13.5AWH
15F/FM/MS

Ref.	R.O.
GLM12515	682-44323-00

MOTORES / ENGINES / MOTORI
9.9/15D
F8
F9.9/T9.9

Ref.	R.O.
GLM12521	65N-44323-00

MOTORES / ENGINES / MOTORI
D150H

Ref.	R.O.
REC6H3-44323-00	6H3-44323-00-00

MOTORES / ENGINES / MOTORI
25B/BETO
F45
50G/GE
T50
F50
FT50
60FE/TLR
FT60
T60
70B/ETN/BE

Ref.	R.O.
PAF25-04000014	61N-44323-00

MOTORES / ENGINES / MOTORI

25B/BMH/30H
E30HM
30G
E25A
25VE-M
F20/F25

Ref.	R.O.
GLM12508	6L2-44323-00

MOTORES / ENGINES / MOTORI

25N/NE/NEM/MLH/MSH/NMH
20D/DEO/DM/MSH/MLH

Ref.	R.O.
REC670-44323-00	670-44323-00

MOTORES / ENGINES / MOTORI

25Q/QEO/E55CMH
30DET/DEO/DMH/D
55B/BM/BET
40E/H
50D/DE
25J/JEO/JETO/ESH

Ref.	R.O.
GLM12524	63D-44323-00-00

MOTORES / ENGINES / MOTORI

F30/40/45/50/60
40V/VE-M/Y/YE
C40MLH/T
T50
50H/HM-R

Ref.	R.O.
REC676-44323-00-40	676-44323-00

MOTORES / ENGINES / MOTORI

E40GMH/GW/JMH
40JWH/GWH
40QE/G/QM/QE-2/QWC

Ref.	R.O.
REC66T-44323-00	66T-44323-00

MOTORES / ENGINES / MOTORI

40X/E40X/MLH
40XW/XMH
F30/40/T25

Ref.	R.O.
REC663-44323-00	663-44323-00

MOTORES / ENGINES / MOTORI

50G/GEO/GETO
25Q/QEO/B
55B/BE/BM
30DET/DEO/DMH/ELH
60FEO
FETO
FEDO
70BEO/BETO/BEMO/CE
40N/H
50ETN/D/DE
25J/JEO/JETO/ESH

Ref.	R.O.
REC688-44323-00	688-44323-00-00

MOTORES / ENGINES / MOTORI

60FET/TR
75CETO/AED-T
70BET/TR
75A/AE-M/TLR/CETO/AED-T
E75B
80A/AET/TLR
85A/AE-D-T
90A/AET/ETN/TR

Ref.	R.O.
REC6E5-44323-00-40	6E5-44323-00

MOTORES / ENGINES / MOTORI

100A/AETO/TLR
115CET/A/B/BET
C115TLR
130BET
140AET/BET

Ref.	R.O.
REC68V-44323-00	6EK-44323-00

MOTORES / ENGINES / MOTORI

F115

Ref.	R.O.
REC6G5-44323-00	6G5-44323-01

MOTORES / ENGINES / MOTORI

F150/200/225
Z150/175/250/300
VZ200
250AET/B/GET
225C/CET/D/DET
150F/FET/AET
175D/DET/AET
200F/FET/GE
225G
200AET/BET
150CET
175BET

Ref.	R.O.
REC6P2-44323-00	6P2-44323-00

MOTORES / ENGINES / MOTORI

Z250
F225/F250

Ref.	R.O.
GLM12519	60X-44323-00

MOTORES / ENGINES / MOTORI

Z250
VZ250

KITS REPARACIÓN BOMBA AGUA
WATER PUMP SERVICE KITS
KIT RICAMBI POMPA ACQUA

Ref.	R.O.
REC682-W0078-A1	682-W0078-A1

MOTORES / ENGINES / MOTORI
9.9/15D
F8
F9.9

Ref.	R.O.
REC63V-W0078-01	63V-W0078-00

MOTORES / ENGINES / MOTORI
9.9F
13.5AWH
15F
F9.9
F15
F13.5

Ref.	R.O.
GLM12058	689-W0078-04

MOTORES / ENGINES / MOTORI
20CM

Ref.	R.O.
GLM12059	689-W0078-A6

MOTORES / ENGINES / MOTORI
20C
25D

Ref.	R.O.
GLM12277	6L2-W0078-00

MOTORES / ENGINES / MOTORI
20NE/NEMO/N/MLH/MSH/NW/NMH/D
20D/DEO/DEM/MSH/DM/MLH
20MSH/DMH/DWO

Ref.	R.O.
GLM12284	6J8-W0078-A1

MOTORES / ENGINES / MOTORI
25J/JEO
30D/DMH/DE

Ref.	R.O.
GLM12285	6J8-W0078-A1

MOTORES / ENGINES / MOTORI
6J8-W0078-A2
25J/JEO
30D/DE/DMH

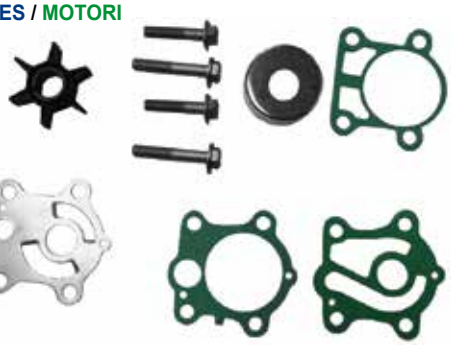

Ref.	R.O.
REC6H4-W0078-00	6H4-W0078-00

MOTORES / ENGINES / MOTORI
25Q/QEO
40N/H/HE
E48CMH
50D/DE/AETN
E55CMH

Ref.	R.O.
REC679-W0078-A1	679-W0078-00

MOTORES / ENGINES / MOTORI
40QE

YAMAHA

RECAMBIOS MARINOS S.L.

Ref.	R.O.
REC6F5-W0078-00	6F5-W0078-00

MOTORES / ENGINES / MOTORI
E40GMH
40GWH

Ref.	R.O.
GLM12276	63D-W0078-01

MOTORES / ENGINES / MOTORI
F40/45/50/60
40V/VMH/VETO/VMH
C40MLH/T/TLR
40VE/VEO/VES
40Y/YETO
50H/HET/HMH

Ref.	R.O.
REC66T-W0078-00	66T-W0078-01

MOTORES / ENGINES / MOTORI
40X
E40X

Ref.	R.O.
GLM12279	663-W0078-A0

MOTORES / ENGINES / MOTORI
55BET

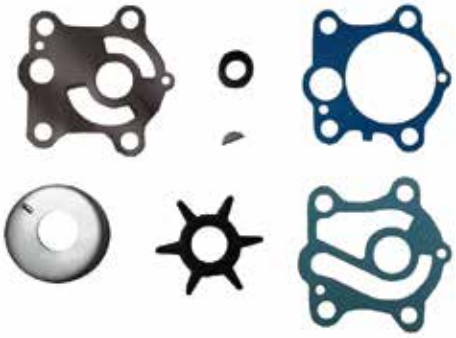

Ref.	R.O.
GLM12282	692-W0078-02

MOTORES / ENGINES / MOTORI
60TR/FETO
75AED/AET
75CETO/TLR/E75B
70BETO/TR
80A
85A/AE/AED/AET/
AEM
90A/AETO/AEMO/TLR
C90TRZ

Ref.	R.O.
REC6H3-W0078-02	6H3-W0078-00

MOTORES / ENGINES / MOTORI
60FE/FET/FEO/FETO
70AETN/B/BEH/BEO/CE

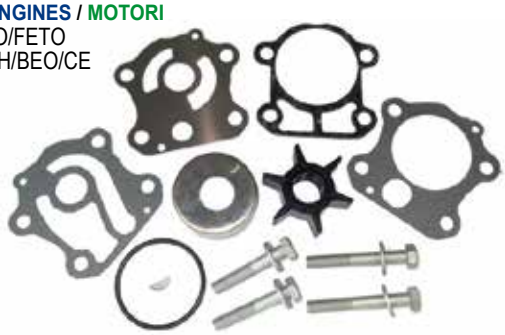

Ref.	R.O.
REC6K5-W0078-01	6K5-W0078-01

MOTORES / ENGINES / MOTORI
E60HM
E-60H

Ref.	R.O.
GLM12053	692-W0078-00/01

MOTORES / ENGINES / MOTORI
60H/HMH
75CETO/TLR
E75B
80A
85A/AE/AET/AED
90A/AET/TR/TLR

Ref.	R.O.
GLM12275	67F-W0078-00

MOTORES / ENGINES / MOTORI
F80/100

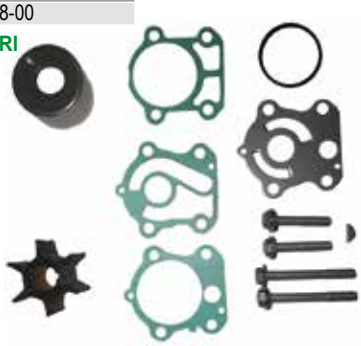

Ref.	R.O.
GLM12264	6N6-W0078-00

MOTORES / ENGINES / MOTORI
115B/BE/BET/CETO/TRX/CETO
130BET/TLR

Ref.	R.O.
GLM12067	68V-W0078-00

MOTORES / ENGINES / MOTORI
F115
FL115
LF115

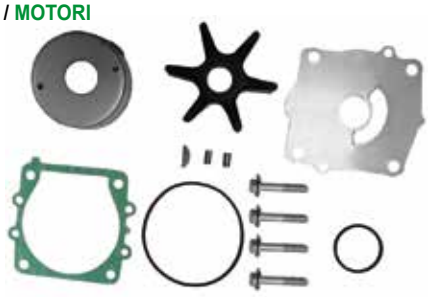

Ref.	R.O.
REC6N6-W0078-02	6N6-W0078-02

MOTORES / ENGINES / MOTORI
115BE/CEO/CETO/A/ETN/BETO
130BETO
140AETO/BETO

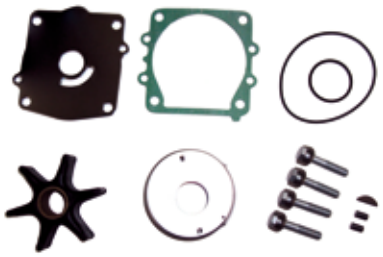

Ref.	R.O.
GLM12075	65N-W0078-A1

MOTORES / ENGINES / MOTORI
D150H/N/NETOL

Ref.	R.O.
REC61A-W0078-A1	61A-W0078-01

MOTORES / ENGINES / MOTORI
250ETD/AETO/AET
150FETO
175FETO
200FETO

Ref.	R.O.
GLM12068	60X-W0078-00

MOTORES / ENGINES / MOTORI
Z250FETO
V250TLR
Z300BETO
V300TLR

HÉLICES ALUMINO E INOXIDABLES DE 3 Y 4 PALAS
3 & 4 BLADE ALUMINUM & STAINLESS STEEL PROPELLERS
ELICHE ALLUMINIO E INOX DA 3 E 4 PALE

SISTEMA CODIGO REFERENCIAS
PART NO. CODING SYSTEM
SISTEMA DI CODICE

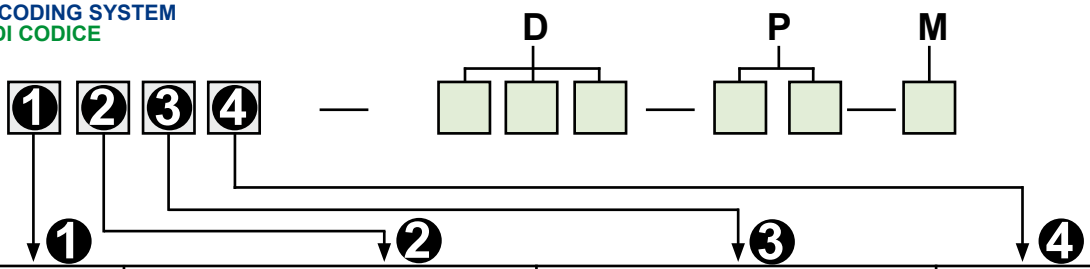

1	2	3	4
1. Mercury, Mariner 2. Johnson, Evinrude 3. Yamaha 4. Suzuki 5. Tohatsu 6. 7. 8. Volvo Penta 9. Rubex System	0.5,6,8 and 9.8 HP Grupo /Group / Gruppo 1. A Grupo /Group / Gruppo 2. B Grupo /Group / Gruppo 3. C Grupo /Group / Gruppo 4. D Grupo /Group / Gruppo 5. E Grupo /Group / Gruppo 6. F Grupo /Group / Gruppo 7. VP (Cubo std./Std. Hub / mozzo std.) 8. VP (Cubo largo /Long Hub / mozzo lungo)	1. Aluminio /Aluminum / Alluminio 2. **Saturn** Acero inox. /S.S. / Acciaio inox. 3. **New Saturn** Acero inox. /S.S. / Acciaio inox. 4. **Titan** Acero inox. /S.S. / Acciaio inox. 5. **HR Titan** Acero inox. /S.S. / Acciaio inox.	1. 3R Rubber Hub 2. 3L Rubber Hub 3. 4R Rubber Hub 4. 4L Rubber Hub

Ejemplo / Note / Esempio

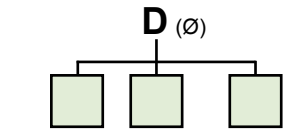

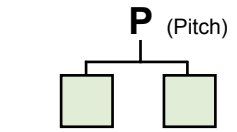

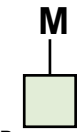

P — Pin Drive Propeller
1, 2, 5 — Different Propeller Hub Fitting Spec.